PASTERNACK
an INFINITE brand

# SHV jack crimp bulkheads, IP67 mated, for RG142,RG400

## RF Connectors
## Technical Data Sheet

**PE45858**

## Configuration

- SHV Jack Connector
- MIL-STD-348B
- 50 Ohms
- Straight Body Geometry
- Connector Interface Types: RG142, RG400
- Bulkhead
- 7/16 Inch Hex

## Features

- Max. Operating Frequency 300 MHz
- Gold over Nickel over copper Plated Brass Contact

## Applications

- General Purpose Test
- Rack and Panel Mount Applications
- Custom Cable Assemblies

### Description

Pasternack's PE45858 SHV jack bulkhead connector with crimp/solder attachment for RG142 and RG400 is part of our full line of RF components available for same-day shipping. Our SHV jack connector operates up to a maximum frequency of 300 MHz. This SHV bulkhead connector allows designers to create external connections on their product enclosures, and can be used in a variety of other rack mount and panel mount applications.

Our SHV jack bulkhead connector PE45858 datasheet specifications and drawing with dimensions are shown below in this PDF. Pasternack's broad catalog of RF, microwave and millimeter wave connectors allows designers to configure and customize their signal connections however they like. Whether the need is to provide an I/O for a board design, or simply create a custom cable assembly configuration, Pasternack has the right connector for the job. Pasternack can also expertly build your custom cable assemblies for you and ship same-day.

### Electrical Specifications

| Description | Minimum | Typical | Maximum | Units |
|---|---|---|---|---|
| Frequency Range | DC | | 300 | MHz |
| Operating Voltage (AC) | | | 3,500 | Vrms |
| Dielectric Withstanding Voltage (AC) | | | 5,000 | Vrms |
| Inner Conductor DC Resistance | | | 2 | mOhms |
| Outer Conductor DC Resistance | | | 1.5 | mOhms |

### Mechanical Specifications

**Size**

| | |
|---|---|
| Length | 1.94 in [49.28 mm] |
| Width/Dia. | 0.68 in [17.27 mm] |
| Height | 0.68 in [17.27 mm] |
| Weight | 0.048 lbs [21.77 g] |

Click the following link (or enter part number in "SEARCH" on website) to obtain additional part information including price, inventory and certifications: SHV jack crimp bulkheads, IP67 mated, for RG142,RG400 PE45858

Pasternack Enterprises, Inc. • P.O. Box 16759, Irvine, CA 92623
**Phone:** (866) 727-8376 or (949) 261-1920 • **Fax:** (949) 261-7451
Sales@Pasternack.com • Techsupport@Pasternack.com

© 2020 Pasternack Enterprises All Rights Reserved

PASTERNACK
an INFINITE brand

SHV jack crimp bulkheads, IP67 mated, for RG142,RG400

# RF Connectors
# Technical Data Sheet

**PE45858**

### Material Specifications

| Description | Material | Plating |
|---|---|---|
| Contact | Brass | Gold over Nickel over copper |
| Insulation | Teflon | |
| Body | Brass | Tinned Copper |
| Coupling Nut | Brass | Tinned Copper |
| Gasket | Silicon | |
| Crimp Sleeve | Brass | Tinned Copper |
| Washer | Brass | Tinned Copper<br>BNC8105-6/W |

## Environmental Specifications

**Temperature**

| | |
|---|---|
| Operating Range | -65 to +165 deg C |
| Thermal Shock | MIL-STD-202, Method 107, Condition B |

## Compliance Certifications (see product page for current document)

## Plotted and Other Data

Notes:

SHV jack crimp bulkheads, IP67 mated, for RG142,RG400 from Pasternack Enterprises has same day shipment for domestic and International orders. Our RF, microwave and millimeter wave products maintain a 99.4% availability and are part of the broadest selection in the industry.

Click the following link (or enter part number in “SEARCH” on website) to obtain additional part information including price, inventory and certifications: SHV jack crimp bulkheads, IP67 mated, for RG142,RG400 PE45858

URL: https://www.pasternack.com/shv-jack-rg142-rg400-connector-pe45858-p.aspx

The information contained in this document is accurate to the best of our knowledge and representative of the part described herein. It may be necessary to make modifications to the part and/or the documentation of the part, in order to implement improvements. Pasternack reserves the right to make such changes as required. Unless otherwise stated, all specifications are nominal. Pasternack does not make any representation or warranty regarding the suitability of the part described herein for any particular purpose, and Pasternack does not assume any liability arising out of the use of any part or documentation.

Pasternack Enterprises, Inc. • P.O. Box 16759, Irvine, CA 92623
**Phone:** (866) 727-8376 or (949) 261-1920 • **Fax:** (949) 261-7451
Sales@Pasternack.com • Techsupport@Pasternack.com

© 2020 Pasternack Enterprises All Rights Reserved

# PE45858 CAD Drawing

SHV jack crimp bulkheads, IP67 mated, for RG142,RG400

| REVISIONS | | | |
|---|---|---|---|
| REV. | DESCRIPTION | DATE | APPROVED |
| A | INITIAL RELEASE | 09/13/2022 | AGANWANI |

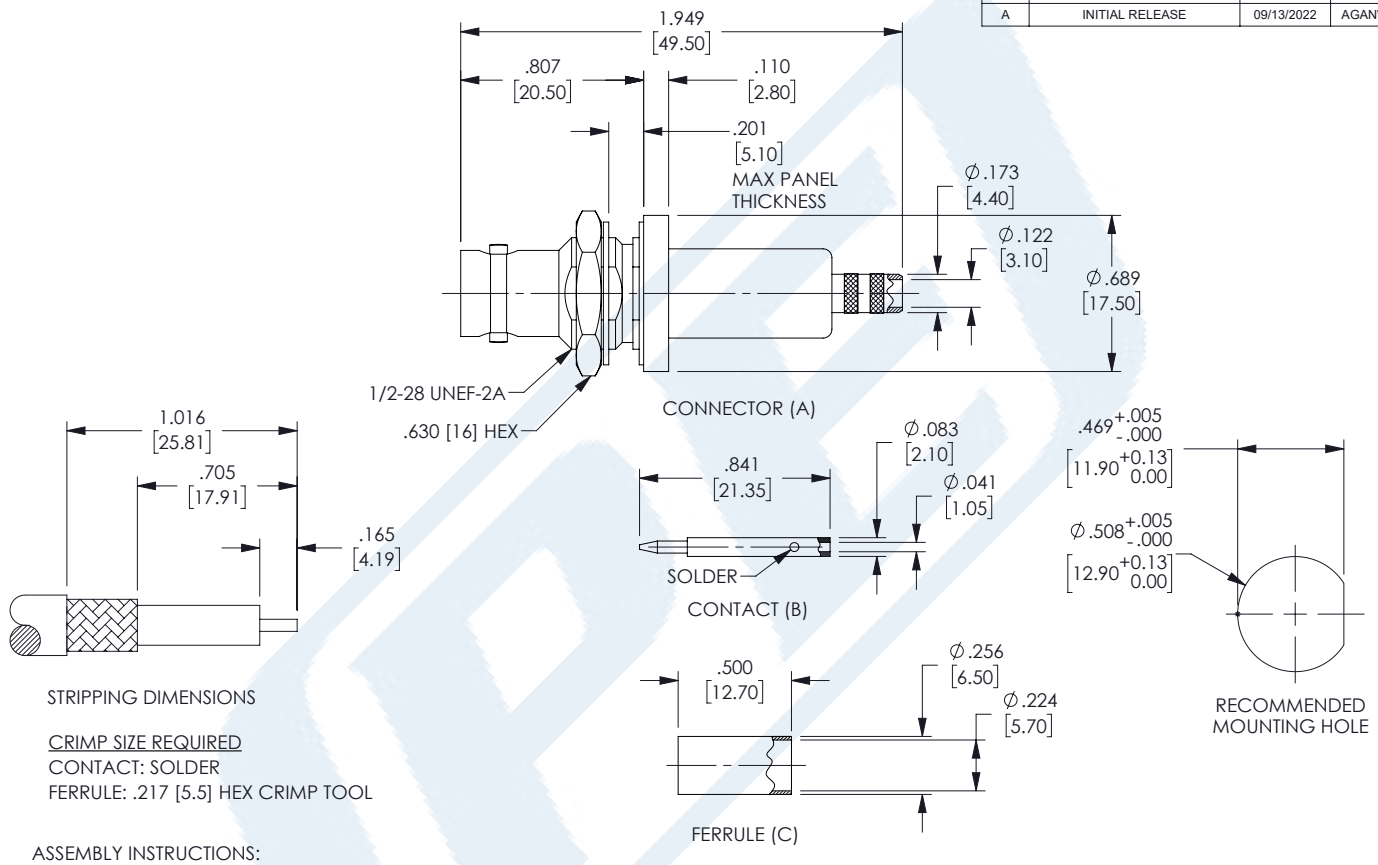


STRIPPING DIMENSIONS

CRIMP SIZE REQUIRED
CONTACT: SOLDER
FERRULE: .217 [5.5] HEX CRIMP TOOL

ASSEMBLY INSTRUCTIONS:

1. STRIP THE CABLE AS SHOWN. DO NOT NICK CENTER CONDUCTOR.
2. SLIDE THE FERRULE (C) OVER THE CABLE JACKET.
3. PLACE THE CONTACT (B) ONTO THE CENTER CONDUCTOR. SOLDER CONTACT TO CENTER CONDUCTOR.
4. LOOSEN THE CABLE BRAID, THEN SLIDE THE CONNECTOR (A) INTO PLACE. THE CABLE BRAID MUST OVERLAP THE KNURLED SECTION AT THE REAR END OF THE CONNECTOR (A).
5. SLIDE THE FERRULE (C) OVER THE CABLE BRAID AND CRIMP IN PLACE.

THESE COMMODITIES, TECHNOLOGY OR SOFTWARE WERE EXPORTED FROM THE UNITED STATES IN ACCORDANCE WITH THE EXPORT ADMINISTRATION REGULATIONS. DIVERSION CONTRARY TO U.S. LAW PROHIBITED.

UNLESS OTHERWISE SPECIFIED
LEADING DIMENSIONS ARE INCHES
DIMENSIONS IN [ ] ARE MILLIMETERS

TOLERANCES:
.X = ± .2 [5.08]
.XX = ± .02 [ .51 ]
.XXX = ± .005 [ .13 ]
FRACTIONS ± 1/32
ANGLES ± 1°

CABLE LENGTH (L) TOLERANCES:
L ≤ 12 [305] = +1 [25] / -0
12 [305] < L ≤ 60 [1524] = +2 [51] / -0
60 [1524] < L ≤ 120 [3048] = +4 [102] / -0
120 [3048] < L ≤ 300 [7620] = +6 [152] / -0
300 [7620] < L = +5%L / -0

ALL DIMENSIONS SHOWN ARE FOR REFERENCE ONLY.


PASTERNACK an INFINITE brand
Pasternack Enterprises, Inc.
P.O.Box 16759, Irvine, CA 92623.
Phone: 1.949.261.1920 | 1.866.727.8376
Fax: 1.949.261.7451
Website: www.pasternack.com
E-mail: sales@pasternack.com


THIRD-ANGLE PROJECTION


THE INFORMATION AND DESIGN IN THIS DOCUMENT IS THE PROPERTY OF PASTERNACK CORPORATION ALL RIGHTS RESERVED.


SHEET 1 OF 1
SCALE N/A

| SIZE | CAGE CODE | DRAWN BY | ITEM NO. | REV |
|---|---|---|---|---|
| A | 53919 | AKRESOWSK | PE45858 | A |

T-Rev.D

PASTERNACK
an INFINITE brand

# SHV plug clamp right angle for RG58,RG142,RG400,JBY195,LMR195

## RF Connectors
## Technical Data Sheet

**PE45849**

## Configuration

- SHV Plug Connector
- MIL-STD-348B
- 50 Ohms
- Right Angle Body Geometry
- Connector Interface Types: RG58, RG142, RG400
- 7/16 Inch Hex

## Features

- Max. Operating Frequency 300 MHz
- Gold over Nickel over copper Plated Brass Contact

## Applications

- General Purpose Test
- Custom Cable Assemblies

### Description

Pasternack's PE45849 SHV plug right angle connector with clamp/solder attachment for RG58, RG142 and RG400 is part of our full line of RF components available for same-day shipping. Our SHV plug connector operates up to a maximum frequency of 300 MHz. Its right angle body geometry allows for easier connections in tight spaces.

Our SHV plug right angle connector PE45849 datasheet specifications and drawing with dimensions are shown below in this PDF. Pasternack's broad catalog of RF, microwave and millimeter wave connectors allows designers to configure and customize their signal connections however they like. Whether the need is to provide an I/O for a board design, or simply create a custom cable assembly configuration, Pasternack has the right connector for the job. Pasternack can also expertly build your custom cable assemblies for you and ship same-day.

### Electrical Specifications

| Description | Minimum | Typical | Maximum | Units |
|---|---|---|---|---|
| Frequency Range | DC | | 300 | MHz |
| Operating Voltage (AC) | | | 3,500 | Vrms |
| Dielectric Withstanding Voltage (AC) | | | 5,000 | Vrms |
| Inner Conductor DC Resistance | | | 2 | mOhms |
| Outer Conductor DC Resistance | | | 1.5 | mOhms |
| Insulation Resistance | 5,000 | | | MOhms |

### Mechanical Specifications

| | |
|---|---|
| **Size** | |
| Length | 0.92 in [23.37 mm] |
| Width/Dia. | 0.57 in [14.48 mm] |
| Height | 1.48 in [37.59 mm] |
| Weight | 0.062 lbs [28.12 g] |

Click the following link (or enter part number in "SEARCH" on website) to obtain additional part information including price, inventory and certifications: SHV plug clamp right angle for RG58,RG142,RG400,JBY195,LMR195 PE45849

Pasternack Enterprises, Inc. • P.O. Box 16759, Irvine, CA 92623
**Phone:** (866) 727-8376 or (949) 261-1920 • **Fax:** (949) 261-7451
Sales@Pasternack.com • Techsupport@Pasternack.com

© 2020 Pasternack Enterprises All Rights Reserved

PASTERNACK
an INFINITE brand

SHV plug clamp right angle for
RG58,RG142,RG400,JBY195,LMR195

## RF Connectors
## Technical Data Sheet

**PE45849**

**Material Specifications**

| Description | Material | Plating |
|---|---|---|
| Contact | Brass | Gold over Nickel over copper |
| Contact Spring | | Tinned Copper |
| Insulation | Teflon | |
| Body | Brass | Tinned Copper |
| Coupling Nut | Brass | Tinned Copper |
| Gasket | Silicon | |
| Crimp Sleeve | Brass | Tinned Copper |
| Washer | Brass | Tinned Copper<br>BNC3200B-0058-9/W |

### Environmental Specifications

**Temperature**

| | |
|---|---|
| Operating Range | -65 to +165 deg C |
| Thermal Shock | MIL-STD-202, Method 107, Condition B |

### Compliance Certifications (see product page for current document)

### Plotted and Other Data

Notes:

SHV plug clamp right angle for RG58,RG142,RG400,JBY195,LMR195 from Pasternack Enterprises has same day shipment for domestic and International orders. Our RF, microwave and millimeter wave products maintain a 99.4% availability and are part of the broadest selection in the industry.

Click the following link (or enter part number in “SEARCH” on website) to obtain additional part information including price, inventory and certifications: SHV plug clamp right angle for RG58,RG142,RG400,JBY195,LMR195 PE45849

URL: https://www.pasternack.com/shv-plug-rg58-rg142-rg400-connector-pe45849-p.aspx

The information contained in this document is accurate to the best of our knowledge and representative of the part described herein. It may be necessary to make modifications to the part and/or the documentation of the part, in order to implement improvements. Pasternack reserves the right to make such changes as required. Unless otherwise stated, all specifications are nominal. Pasternack does not make any representation or warranty regarding the suitability of the part described herein for any particular purpose, and Pasternack does not assume any liability arising out of the use of any part or documentation.

Pasternack Enterprises, Inc. • P.O. Box 16759, Irvine, CA 92623
**Phone:** (866) 727-8376 or (949) 261-1920 • **Fax:** (949) 261-7451
Sales@Pasternack.com • Techsupport@Pasternack.com

© 2020 Pasternack Enterprises All Rights Reserved

# PE45849 CAD Drawing

SHV plug clamp right angle for RG58,RG142,RG400,JBY195,LMR195

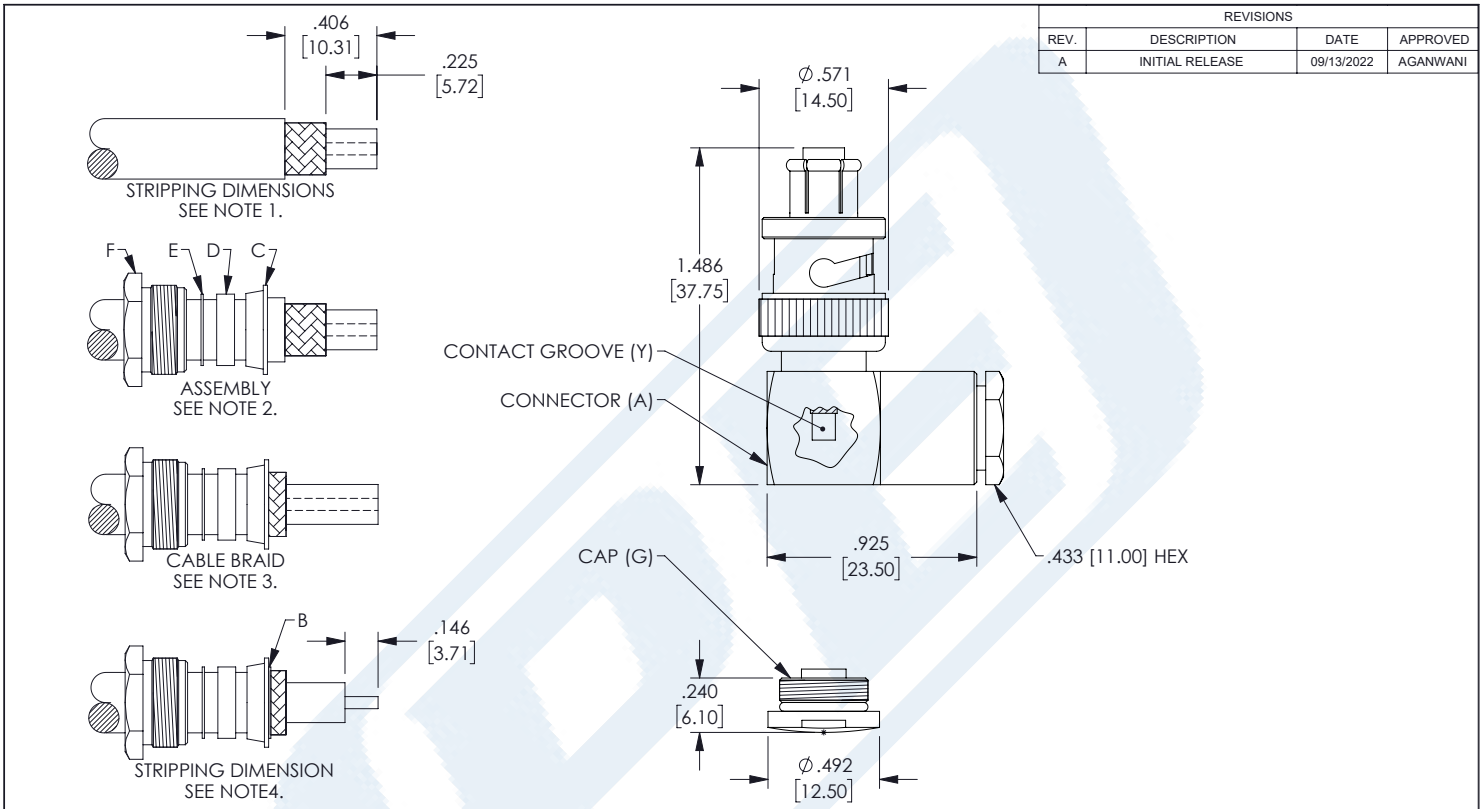


| REVISIONS | | | |
|---|---|---|---|
| REV. | DESCRIPTION | DATE | APPROVED |
| A | INITIAL RELEASE | 09/13/2022 | AGANWANI |

ASSEMBLY INSTRUCTIONS:

1. STRIP THE CABLE AS SHOWN. DO NOT CUT DIELECTRIC.
2. SLIDE THE NUT (F), WASHER (E), GASKET (D) AND BRAID CLAMP (C) OVER THE CABLE JACKET, AS SHOWN.
3. WRAP THE CABLE BRAID BACK AND OVER THE FRONT OF THE CLAMP.
4. STRIP THE CABLE AS SHOWN. DO NOT NICK CENTER CONDUCTOR. SLIDE THE WASHER (B) INTO PLACE, AS SHOWN.
5. INSERT THE CENTER CONDUCTOR INTO THE CONNECTOR (A) UNTIL IT APPEARS IN THE CONTACT GROOVE (Y). SLIDE THE CABLE CLAMPING HARDWARE FORWARD AND TIGHTEN THE NUT. SOLDER THE CENTER CONDUCTOR IN THE CONTACT GROOVE.
6. SCREW THE CAP (G) INTO THE CONNECTOR BODY(A).

THESE COMMODITIES, TECHNOLOGY OR SOFTWARE WERE EXPORTED FROM THE UNITED STATES IN ACCORDANCE WITH THE EXPORT ADMINISTRATION REGULATIONS. DIVERSION CONTRARY TO U.S. LAW PROHIBITED.

UNLESS OTHERWISE SPECIFIED LEADING DIMENSIONS ARE INCHES DIMENSIONS IN [ ] ARE MILLIMETERS

TOLERANCES:
.X = ± .2 [5.08]
.XX = ± .02 [ .51 ]
.XXX = ± .005 [ .13 ]
FRACTIONS ± 1/32
ANGLES ± 1°

CABLE LENGTH (L) TOLERANCES:
L ≤ 12 [305] = +1 [25] / -0
12 [305] < L ≤ 60 [1524] = +2 [51] / -0
60 [1524] < L ≤ 120 [3048] = +4 [102] / -0
120 [3048] < L ≤ 300 [7620] = +6 [152] / -0
300 [7620] < L = +5%L / -0

ALL DIMENSIONS SHOWN ARE FOR REFERENCE ONLY.


PASTERNACK an INFINITE brand
Pasternack Enterprises, Inc.
P.O.Box 16759, Irvine, CA 92623.
Phone: 1.949.261.1920 | 1.866.727.8376
Fax: 1.949.261.7451
Website: www.pasternack.com
E-mail: sales@pasternack.com


THIRD-ANGLE PROJECTION


THE INFORMATION AND DESIGN IN THIS DOCUMENT IS THE PROPERTY OF PASTERNACK CORPORATION ALL RIGHTS RESERVED.


SHEET 1 OF 1

SCALE N/A

| SIZE | CAGE CODE | DRAWN BY | ITEM NO. | REV |
|---|---|---|---|---|
| A | 53919 | AKRESOWSK | PE45849 | A |

T-Rev.D

# Flexible RG58 Coax Cable Single Shielded with Black PVC (NC) Jacket



## Configuration

- Flexible Cable
- 1 Shield(s)

### Electrical Specifications

| Description | Minimum | Typical | Maximum | Units |
|---|---|---|---|---|
| Frequency Range | DC | | 5 | GHz |
| Impedance | | 50 | | Ohms |
| Velocity of Propagation | | 65.9 | | % |
| Operating Voltage (AC) | | | 1,900 | Vrms |
| Nominal Capacitance | | 30.8 [101.05] | | pF/ft [pF/m] |

#### Performance by Frequency Band

| Description | F1 | F2 | F3 | F4 | F5 | Units |
|---|---|---|---|---|---|---|
| Frequency | 0.01 | 0.1 | 1 | 5 | | GHz |
| Attenuation, Typ | 1.4 | 4.9 | 20 | 60 | | dB/100ft |
| | 4.59 | 16.08 | 65.62 | 196.85 | | dB/100m |
| Input Power (CW), Max | | | 44 | | | Watts |

### Mechanical Specifications

| | |
|---|---|
| Diameter | 0.195 in [4.95 mm] |
| Weight | 0.025 lbs/ft [0.04 Kg/m] |
| Min. Bend Radius (Installation) | 0.98 in [24.89 mm] |
| Min. Bend Radius (Repeated) | 1.96 in [49.78 mm] |

#### Construction Specifications

| Description | Material and Plating | Diameter |
|---|---|---|
| Inner Conductor | Copper, Tin, 19 Strands | 0.036 in [0.91 mm] |
| Conductor Type | Stranded | |
| Dielectric | PE | 0.116 in [2.95 mm] |

Click the following link (or enter part number in “SEARCH” on website) to obtain additional part information including price, inventory and certifications: Flexible RG58 Coax Cable Single Shielded with Black PVC (NC) Jacket RG58C/U

Pasternack Enterprises, Inc. • P.O. Box 16759, Irvine, CA 92623
**Phone:** (866) 727-8376 or (949) 261-1920 • **Fax:** (949) 261-7451
Sales@Pasternack.com • Techsupport@Pasternack.com

© 2017 Pasternack Enterprises All Rights Reserved

# Flexible RG58 Coax Cable Single Shielded with Black PVC (NC) Jacket



| | | |
|---|---|---|
| First Shield | Tinned Copper Braid | 0.138 in [3.51 mm] |
| Jacket | PVC (NC), Black | 0.195 in [4.95 mm] |

## Environmental Specifications

**Temperature**

| | |
|---|---|
| Operating Range | -40 to +80 deg C |

## Compliance Certifications (see product page for current document)

## Plotted and Other Data

Notes:

Flexible RG58 Coax Cable Single Shielded with Black PVC (NC) Jacket from Pasternack Enterprises has same day shipment for domestic and International orders. Our RF, microwave and millimeter wave products maintain a 99.4% availability and are part of the broadest selection in the industry.

Click the following link (or enter part number in "SEARCH" on website) to obtain additional part information including price, inventory and certifications: Flexible RG58 Coax Cable Single Shielded with Black PVC (NC) Jacket RG58C/U

URL: https://www.pasternack.com/flexible-0.195-rg58-50-ohm-coax-cable-pvc-jacket-rg58c-u-p.aspx

The information contained in this document is accurate to the best of our knowledge and representative of the part described herein. It may be necessary to make modifications to the part and/or the documentation of the part, in order to implement improvements. Pasternack reserves the right to make such changes as required. Unless otherwise stated, all specifications are nominal. Pasternack does not make any representation or warranty regarding the suitability of the part described herein for any particular purpose, and Pasternack does not assume any liability arising out of the use of any part or documentation.

Pasternack Enterprises, Inc. • P.O. Box 16759, Irvine, CA 92623
**Phone:** (866) 727-8376 or (949) 261-1920 • **Fax:** (949) 261-7451
Sales@Pasternack.com • Techsupport@Pasternack.com

© 2017 Pasternack Enterprises All Rights Reserved

# RG58C/U CAD Drawing

Flexible RG58 Coax Cable Single Shielded with Black PVC (NC) Jacket

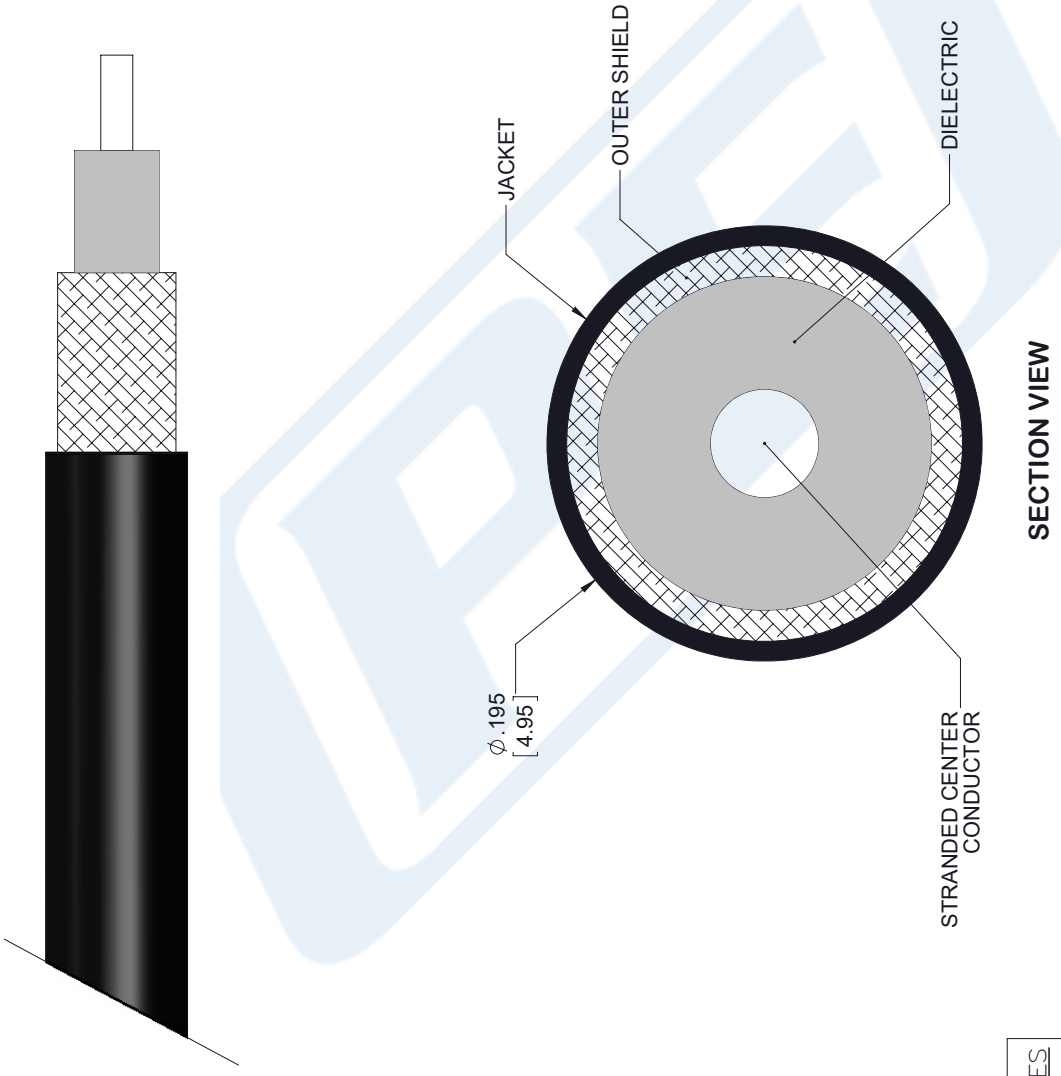


| STANDARD TOLERANCES | |
|---|---|
| .X | ±0.2 |
| .XX | ±0.01 |
| .XXX | ±0.005 |

*STANDARD TOLERANCES APPLY ONLY TO DIMENSIONS IN INCHES

NOTES:
1. UNLESS OTHERWISE SPECIFIED ALL DIMENSIONS ARE NOMINAL.
2. ALL SPECIFICATIONS ARE SUBJECT TO CHANGE WITHOUT NOTICE AT ANY TIME
3. DIMENSIONS ARE IN INCHES [mm].

DWG TITLE RG58C/U

CAD FILE 091817 | SCALE N/A | SIZE A | 7361

CAGE CODE 53919

PASTERNACK®
THE ENGINEER'S RF SOURCE
Pasternack Enterprises, Inc.
P.O. Box 16759 | Irvine | CA | 92623
**Phone:** (949) 261-1920 | **Fax:** (949) 261-7451
**Website:** www.pasternack.com | **E-Mail:** sales@pasternack.com

© 2017 Pasternack Enterprises All Rights Reserved