PASTERNACK®
www.pasternack.com

SMA Male Right Angle Connector Clamp/Solder Attachment For RG188-DS, RG316-DS

TECHNICAL DATA SHEET PE4407

SMA Male Right Angle Connector Clamp/Solder Attachment For RG188-DS, RG316-DS

Configuration

Connector	SMA Male
Connector Specification	MIL-C-39012
Connector Interface Type	RG188-DS,RG316-DS
Cable Attachment Method (Shield/Contact)	Clamp/Solder
Body Style	Right Angle

Electrical Specifications

Impedance, Ohms	50

Mechanical Specifications

Temperature

Operating Range, deg C	-65 to +165

Size

Length, in [mm]	0.715 [18.16]
Width/Dia., in [mm]	0.312 [7.92]
Height, in [mm]	0.615 [15.62]
Weight, lbs [g]	0.013 [5.9]

Connector

Type	SMA Male
Contact Material and Plating	Gold
Contact Plating Specification	MIL-G-45204
Coupling Nut Material and Plating	Brass, Nickel
Hex Size, in.	5/16
Torque, in-lbs [Nm]	5 [0.57]
Body Material and Plating	Brass, Nickel
Dielectric Type	Teflon

Click the following link (or enter part number in “SEARCH” on website) to obtain additional part information including price, inventory and certifications: SMA Male Right Angle Connector Clamp/Solder Attachment For RG188-DS, RG316-DS PE4407

The information contained in this document is accurate to the best of our knowledge and representative of the part described herein. It may be necessary to make modifications to the part and/or the documentation of the part, in order to implement improvements. Pasternack reserves the right to make such changes as required. Unless otherwise stated, all specifications are nominal.

Pasternack Enterprises, Inc. • P.O. Box 16759, Irvine, CA 92623
Phone: (866) 727-8376 or (949) 261-1920 • **Fax:** (949) 261-7451
Sales@Pasternack.com • Techsupport@Pasternack.com

© 2013 Pasternack Enterprises All Rights Reserved

SMA Male Right Angle Connector Clamp/Solder Attachment For RG188-DS, RG316-DS

Compliance Certifications (visit www.Pasternack.com for current document)

Plotted and Other Data

Notes: Values at 25 °C, sea level

SMA Male Right Angle Connector Clamp/Solder Attachment For RG188-DS, RG316-DS from Pasternack Enterprises has same day shipment for domestic and International orders. Our RF, microwave and fiber optic products maintain a 99% availability and are part of the broadest selection in the industry.

Click the following link (or enter part number in “SEARCH” on website) to obtain additional part information including price, inventory and certifications: SMA Male Right Angle Connector Clamp/Solder Attachment For RG188-DS, RG316-DS PE4407

URL: http://www.pasternack.com/sma-male-standard-rg188-ds-rg316-ds-connector-pe4407-p.aspx

The information contained in this document is accurate to the best of our knowledge and representative of the part described herein. It may be necessary to make modifications to the part and/or the documentation of the part, in order to implement improvements. Pasternack reserves the right to make such changes as required. Unless otherwise stated, all specifications are nominal.

Pasternack Enterprises, Inc. • P.O. Box 16759, Irvine, CA 92623
Phone: (866) 727-8376 or (949) 261-1920 • **Fax:** (949) 261-7451
Sales@Pasternack.com • Techsupport@Pasternack.com

© 2013 Pasternack Enterprises All Rights Reserved

PE4407 CAD Drawing

SMA Male Right Angle Connector Clamp/Solder Attachment For RG188-DS, RG316-DS

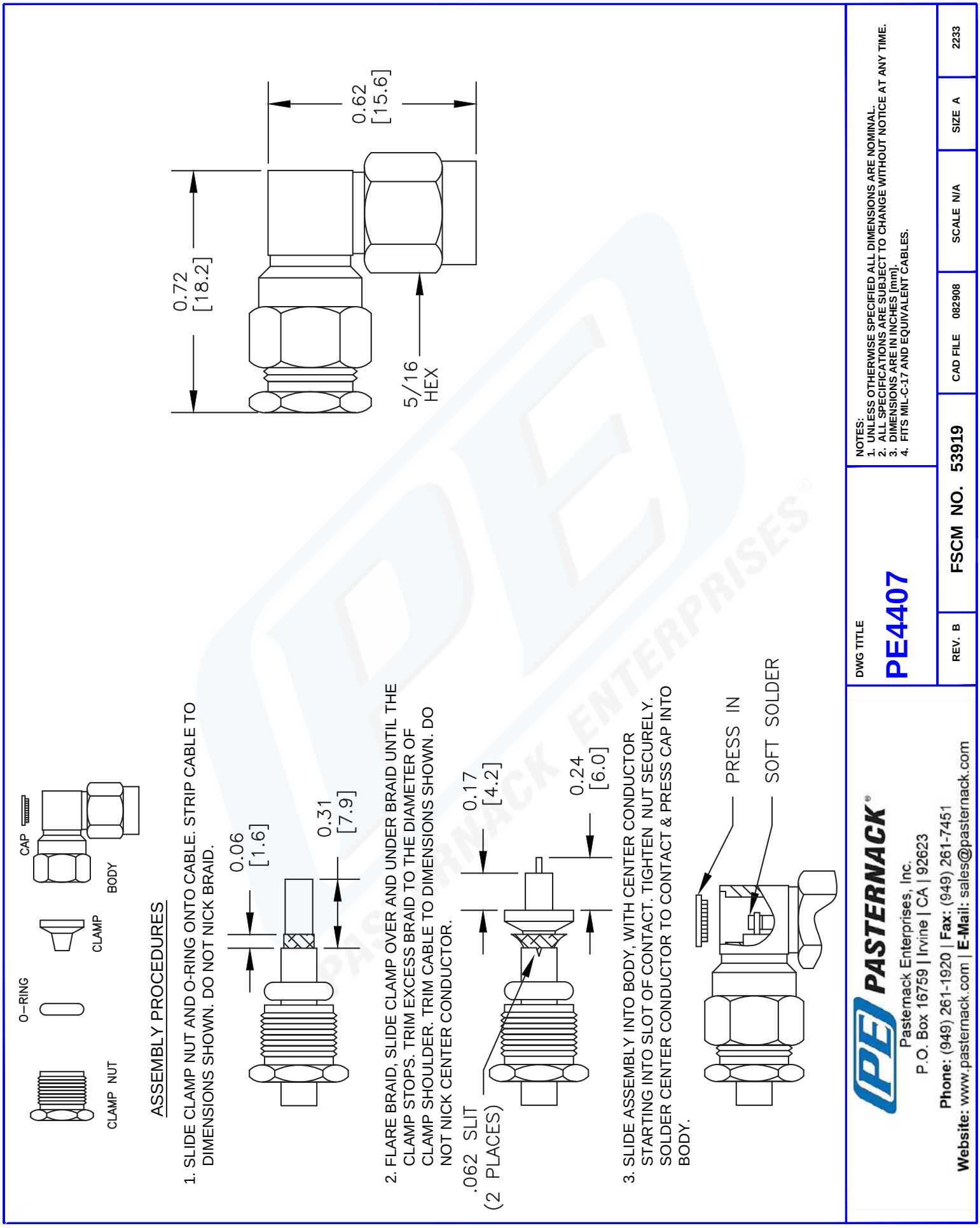

© 2013 Pasternack Enterprises All Rights Reserved

PASTERNACK®
THE ENGINEER'S RF SOURCE

10-32 Male Right Angle Connector Crimp/Solder Attachment for RG316-DS, RG188-DS

TECHNICAL DATA SHEET PE45032

Configuration

Connector	10-32 Male
Connector Interface Type	RG316-DS, RG188-DS
Attachment Method (Shield/Contact)	Crimp/Solder
Body Style	Right Angle

Electrical Specifications

Impedance	50 Ohms

Mechanical Specifications

Size

Length	0.74 in [18.8 mm]
Width/Dia.	0.25 in [6.35 mm]
Height	0.53 in [13.46 mm]
Weight	0.009 lbs [4.08 g]

Connector

Type	10-32 Male
Contact Material and Plating	Gold
Coupling Nut Material and Plating	Brass, Nickel
Body Material and Plating	Brass, Nickel
Dielectric Type	PTFE

Compliance Certifications (visit www.Pasternack.com for current document)

RoHS Compliant

Click the following link (or enter part number in "SEARCH" on website) to obtain additional part information including price, inventory and certifications: 10-32 Male Right Angle Connector Crimp/Solder Attachment for RG316-DS, RG188-DS PE45032

Pasternack Enterprises, Inc. • P.O. Box 16759, Irvine, CA 92623
Phone: (866) 727-8376 or (949) 261-1920 • **Fax:** (949) 261-7451
Sales@Pasternack.com • Techsupport@Pasternack.com

© 2014 Pasternack Enterprises All Rights Reserved

10-32 Male Right Angle Connector Crimp/Solder Attachment for RG316-DS, RG188-DS

TECHNICAL DATA SHEET PE45032

Plotted and Other Data

Notes:

- Values at +25 °C, sea level

10-32 Male Right Angle Connector Crimp/Solder Attachment for RG316-DS, RG188-DS from Pasternack Enterprises has same day shipment for domestic and International orders. Our RF, microwave and millimeter wave products maintain a 99% availability and are part of the broadest selection in the industry.

Click the following link (or enter part number in “SEARCH” on website) to obtain additional part information including price, inventory and certifications: 10-32 Male Right Angle Connector Crimp/Solder Attachment for RG316-DS, RG188-DS PE45032

URL: http://www.pasternack.com/10-32-male-standard-standard-rg316-ds-rg188-ds-connector-pe45032-p.aspx

The information contained in this document is accurate to the best of our knowledge and representative of the part described herein. It may be necessary to make modifications to the part and/or the documentation of the part, in order to implement improvements. Pasternack reserves the right to make such changes as required. Unless otherwise stated, all specifications are nominal. Pasternack does not make any representation or warranty regarding the suitability of the part described herein for any particular purpose, and Pasternack does not assume any liability arising out of the use of any part or documentation.

Pasternack Enterprises, Inc. • P.O. Box 16759, Irvine, CA 92623
Phone: (866) 727-8376 or (949) 261-1920 • **Fax:** (949) 261-7451
Sales@Pasternack.com • Techsupport@Pasternack.com

© 2014 Pasternack Enterprises All Rights Reserved

PE45032 CAD Drawing

10-32 Male Right Angle Connector Crimp/Solder Attachment for RG316-DS, RG188-DS

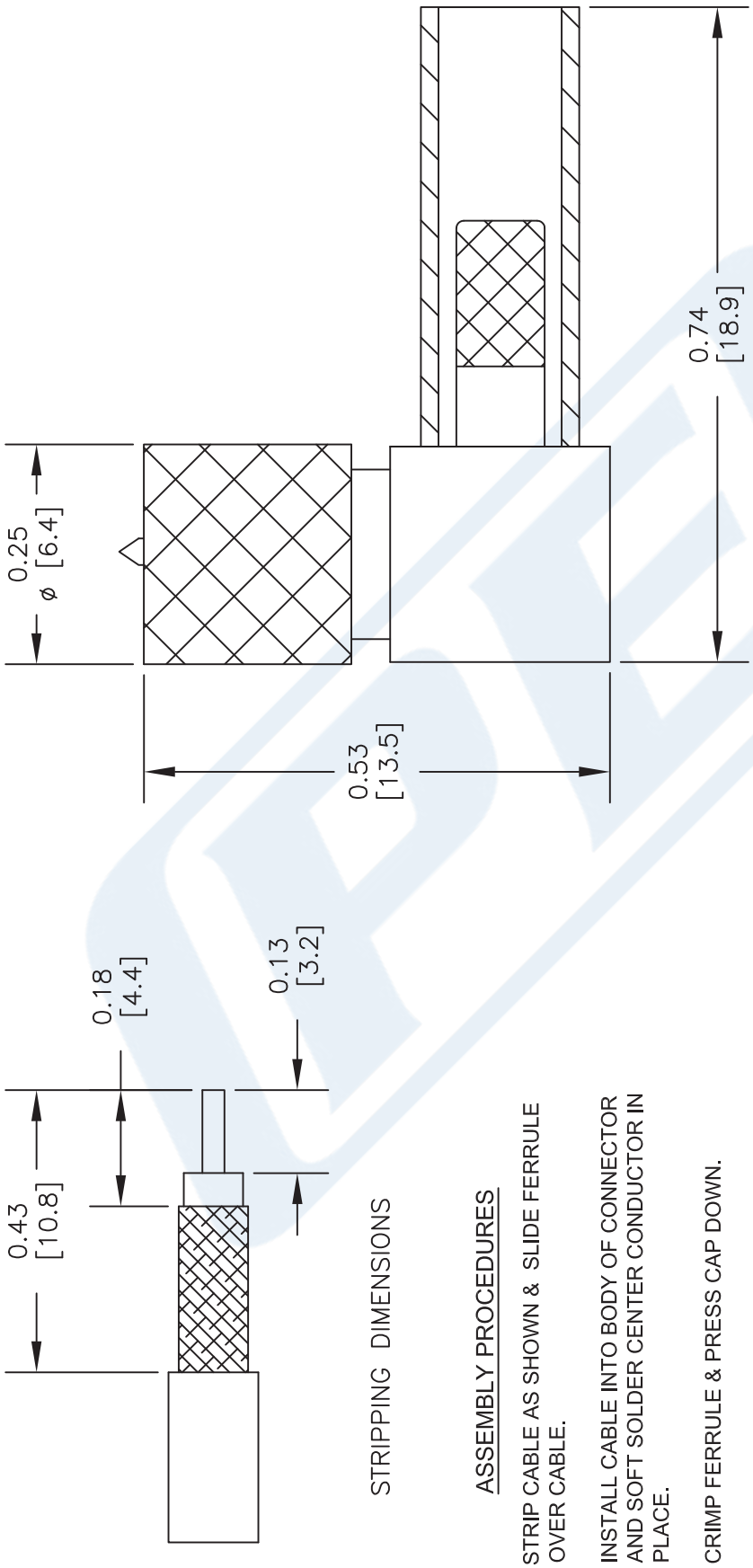

STRIPPING DIMENSIONS

ASSEMBLY PROCEDURES

1. STRIP CABLE AS SHOWN & SLIDE FERRULE OVER CABLE.
2. INSTALL CABLE INTO BODY OF CONNECTOR AND SOFT SOLDER CENTER CONDUCTOR IN PLACE.
3. CRIMP FERRULE & PRESS CAP DOWN.

CRIMP SIZE REQUIRED

FERRULE: .128" HEX CRIMP TOOL

NOTES:
1. UNLESS OTHERWISE SPECIFIED ALL DIMENSIONS ARE NOMINAL.
2. ALL SPECIFICATIONS ARE SUBJECT TO CHANGE WITHOUT NOTICE AT ANY TIME.
3. DIMENSIONS ARE IN INCHES [mm].
4. FITS MIL-C-17 AND EQUIVALENT CABLES.

DWG TITLE
PE45032

FSCM NO. 53919

CAD FILE 051314 | SCALE N/A | SIZE A | 2233

PASTERNACK®
THE ENGINEER'S RF SOURCE
Pasternack Enterprises, Inc.
P.O. Box 16759 | Irvine | CA | 92623
Phone: (949) 261-1920 | **Fax:** (949) 261-7451
Website: www.pasternack.com | **E-Mail:** sales@pasternack.com

© 2014 Pasternack Enterprises All Rights Reserved

Flexible RG316-DS Coax Cable Double Shielded with Tan FEP Jacket

RF Cables
Technical Data Sheet

RG316-DS

Configuration

- Flexible Cable
- 2 Shield(s)

Electrical Specifications

Description	Minimum	Typical	Maximum	Units
Frequency Range	DC		3	GHz
Impedance		50		Ohms
Velocity of Propagation		69.5		%
Shielding Effectiveness	85			dB
Operating Voltage (AC)			1,200	Vrms
Inner Conductor DC Resistance			83.82	Ohms/1000ft
Outer Conductor DC Resistance			5.33	Ohms/1000ft
Nominal Capacitance		28.96 [95.01]		pF/ft [pF/m]
Insulation Resistance	304.8			MOhms/1000ft

Performance by Frequency Band

Description	F1	F2	F3	F4	F5	Units
Frequency	0.1	0.4	1	2	3	GHz
Attenuation, Max	10.97	20.97	37.95	45.05	57.94	dB/100ft
	35.99	68.8	124.51	147.8	190.09	dB/100m
Attenuation, Typ	8.29	17.5	29	39.41	53.55	dB/100ft
	27.2	57.41	95.14	129.3	175.69	dB/100m
Input Power (CW), Max	375	185	120	85	65	Watts

Mechanical Specifications

Diameter	0.114 in [2.9 mm]
Weight	0.015 lbs/ft [0.02 Kg/m]
Min. Bend Radius (Installation)	0.59 in [14.99 mm]
Min. Bend Radius (Repeated)	1.57 in [39.88 mm]

Click the following link (or enter part number in “SEARCH” on website) to obtain additional part information including price, inventory and certifications: Flexible RG316-DS Coax Cable Double Shielded with Tan FEP Jacket RG316-DS

Pasternack Enterprises, Inc. • P.O. Box 16759, Irvine, CA 92623
Phone: (866) 727-8376 or (949) 261-1920 • **Fax:** (949) 261-7451
Sales@Pasternack.com • Techsupport@Pasternack.com

© 2020 Pasternack Enterprises All Rights Reserved

Flexible RG316-DS Coax Cable Double Shielded with Tan FEP Jacket

Construction Specifications

Description	Material and Plating	Diameter
Inner Conductor	Copper Clad Steel, Silver, 7 Strands	0.02 in 0.51 mm
Conductor Type	Stranded	
Dielectric	PTFE	0.06 in [1.52 mm]
First Shield	Silver Plated Copper Braid	
Second Shield	Silver Plated Copper Braid	0.094 in 2.39 mm
Jacket	FEP, Tan	0.114 in [2.9 mm]

Environmental Specifications

Temperature

Operating Range	-55 to +200 deg C
Storage Range	0 to +40 deg C

Compliance Certifications (see product page for current document)

Plotted and Other Data

Notes:

Flexible RG316-DS Coax Cable Double Shielded with Tan FEP Jacket from Pasternack Enterprises has same day shipment for domestic and International orders. Our RF, microwave and millimeter wave products maintain a 99.4% availability and are part of the broadest selection in the industry.

Click the following link (or enter part number in “SEARCH” on website) to obtain additional part information including price, inventory and certifications: Flexible RG316-DS Coax Cable Double Shielded with Tan FEP Jacket RG316-DS

URL: https://www.pasternack.com/flexible-0.114-rg316-ds-50-ohm-coax-cable-fep-jacket-rg316-ds-p.aspx

The information contained in this document is accurate to the best of our knowledge and representative of the part described herein. It may be necessary to make modifications to the part and/or the documentation of the part, in order to implement improvements. Pasternack reserves the right to make such changes as required. Unless otherwise stated, all specifications are nominal. Pasternack does not make any representation or warranty regarding the suitability of the part described herein for any particular purpose, and Pasternack does not assume any liability arising out of the use of any part or documentation.

Pasternack Enterprises, Inc. • P.O. Box 16759, Irvine, CA 92623
Phone: (866) 727-8376 or (949) 261-1920 • **Fax:** (949) 261-7451
Sales@Pasternack.com • Techsupport@Pasternack.com

© 2020 Pasternack Enterprises All Rights Reserved

RG316-DS CAD Drawing

Flexible RG316-DS Coax Cable Double Shielded with Tan FEP Jacket

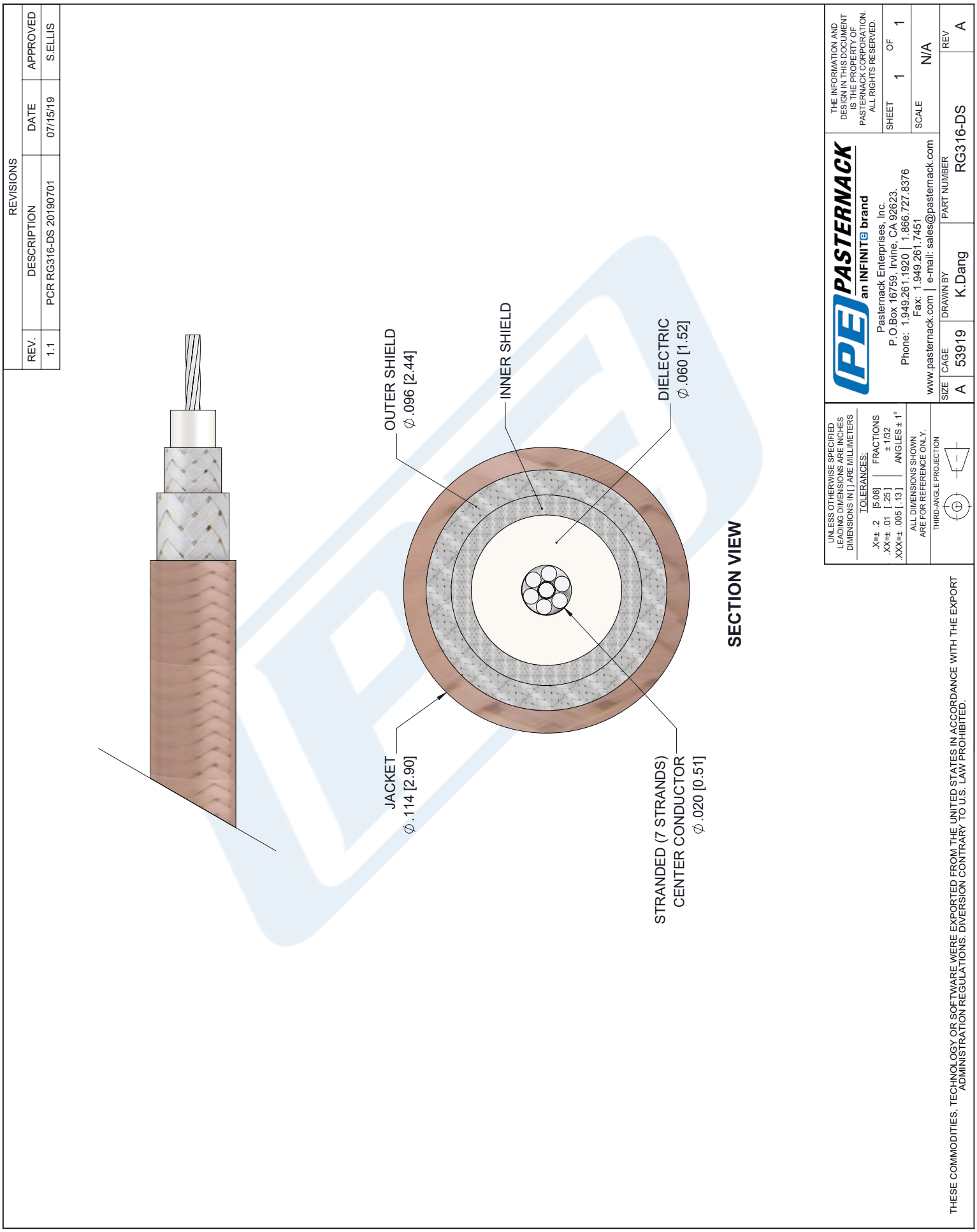

© 2020 Pasternack Enterprises All Rights Reserved