PASTERNACK®
THE ENGINEER'S RF SOURCE

# SHV Plug Connector Crimp/Solder Attachment for RG58, RG303, RG141, PE-C195, PE-P195, LMR-195, 0.195 inch



## Configuration

- SHV Plug Connector
- MIL-STD-348A
- 50 Ohms
- Straight Body Geometry
- RG58, RG303, RG141, PE-C195, PE-P195, LMR-195, 0.195 inch Interface Type
- Crimp/Solder Attachment

## Features

- Max. Operating Frequency 300 MHz
- Good VSWR of 1.3:1
- Gold Plated Brass Contact
- 30 µin minimum contact plating

## Applications

- General Purpose Test
- Custom Cable Assemblies

### Description

Pasternack's PE4194 SHV plug connector with crimp/solder attachment for RG58, RG303, RG141, PE-C195, PE-P195, LMR-195 and 0.195 inch is part of our full line of RF components available for same-day shipping. Our SHV plug connector operates up to a maximum frequency of 300 MHz and offers good VSWR of 1.3:1.

Our SHV plug connector PE4194 datasheet specifications and drawing with dimensions are shown below in this PDF. Pasternack's broad catalog of RF, microwave and millimeter wave connectors allows designers to configure and customize their signal connections however they like. Whether the need is to provide an I/O for a board design, or simply create a custom cable assembly configuration, Pasternack has the right connector for the job. Pasternack can also expertly build your custom cable assemblies for you and ship same-day.

### Electrical Specifications

| Description | Minimum | Typical | Maximum | Units |
|---|---|---|---|---|
| Frequency Range | DC | | 300 | MHz |
| VSWR | | | 1.3:1 | |
| Operating Voltage (AC) | | | 1,400 | Vrms |

### Mechanical Specifications

**Size**

| | |
|---|---|
| Length | 1.778 in [45.16 mm] |
| Width/Dia. | 0.571 in [14.50 mm] |
| Weight | 0.035 lbs [15.88 g] |

Click the following link (or enter part number in "SEARCH" on website) to obtain additional part information including price, inventory and certifications: SHV Plug Connector Crimp/Solder Attachment for RG58, RG303, RG141, PE-C195, PE-P195, LMR-195, 0.195 inch PE4194

Pasternack Enterprises, Inc. • P.O. Box 16759, Irvine, CA 92623
**Phone:** (866) 727-8376 or (949) 261-1920 • **Fax:** (949) 261-7451
Sales@Pasternack.com • Techsupport@Pasternack.com

© 2016 Pasternack Enterprises All Rights Reserved

# SHV Plug Connector Crimp/Solder Attachment for RG58, RG303, RG141, PE-C195, PE-P195, LMR-195, 0.195 inch



**Material Specifications**

| Description | Material | Plating |
|---|---|---|
| Contact | Brass | Gold<br>30 µin minimum |
| Insulation | PTFE | |
| Body | Brass | Nickel<br>100 µin minimum |
| Coupling Nut | Brass | Nickel<br>100 µin minimum |
| Crimp Sleeve | Brass | Nickel |

## Environmental Specifications

**Temperature**

Operating Range -65 to +165 deg C

## Compliance Certifications (see product page for current document)

## Plotted and Other Data

Notes:

SHV Plug Connector Crimp/Solder Attachment for RG58, RG303, RG141, PE-C195, PE-P195, LMR-195, 0.195 inch from Pasternack Enterprises has same day shipment for domestic and International orders. Our RF, microwave and millimeter wave products maintain a 99% availability and are part of the broadest selection in the industry.

Click the following link (or enter part number in "SEARCH" on website) to obtain additional part information including price, inventory and certifications: SHV Plug Connector Crimp/Solder Attachment for RG58, RG303, RG141, PE-C195, PE-P195, LMR-195, 0.195 inch PE4194

URL: https://www.pasternack.com/shv-plug-standard-rg58-connector-pe4194-p.aspx

The information contained in this document is accurate to the best of our knowledge and representative of the part described herein. It may be necessary to make modifications to the part and/or the documentation of the part, in order to implement improvements. Pasternack reserves the right to make such changes as required. Unless otherwise stated, all specifications are nominal. Pasternack does not make any representation or warranty regarding the suitability of the part described herein for any particular purpose, and Pasternack does not assume any liability arising out of the use of any part or documentation.

Pasternack Enterprises, Inc. • P.O. Box 16759, Irvine, CA 92623
**Phone:** (866) 727-8376 or (949) 261-1920 • **Fax:** (949) 261-7451
Sales@Pasternack.com • Techsupport@Pasternack.com

© 2016 Pasternack Enterprises All Rights Reserved

# PE4194 CAD Drawing

SHV Plug Connector Crimp/Solder Attachment for RG58, RG303, RG141, PE-C195, PE-P195, LMR-195, 0.195 inch

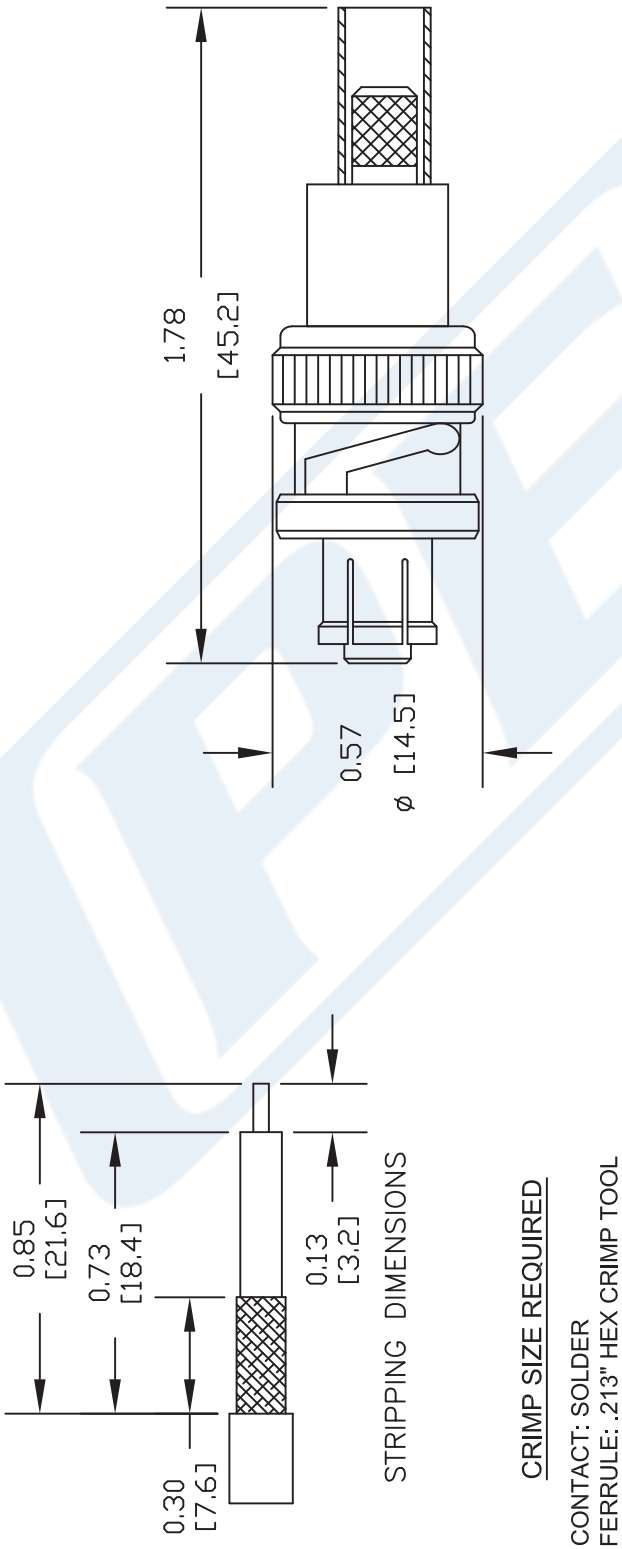


NOTES:
1. UNLESS OTHERWISE SPECIFIED ALL DIMENSIONS ARE NOMINAL.
2. ALL SPECIFICATIONS ARE SUBJECT TO CHANGE WITHOUT NOTICE AT ANY TIME.
3. DIMENSIONS ARE IN INCHES [mm].
4. FITS MIL-C-17 AND EQUIVALENT CABLES.

DWG TITLE **PE4194**

| REV. - | FSCM NO. 53919 | CAD FILE 042309 | SCALE N/A | SIZE A | 147 |
|---|---|---|---|---|---|


PASTERNACK®
Pasternack Enterprises, Inc.
P.O. Box 16759 | Irvine | CA | 92623
**Phone:** (949) 261-1920 | **Fax:** (949) 261-7451
**Website:** www.pasternack.com | **E-Mail:** sales@pasternack.com


© 2016 Pasternack Enterprises All Rights Reserved

PASTERNACK
an INFINITE brand

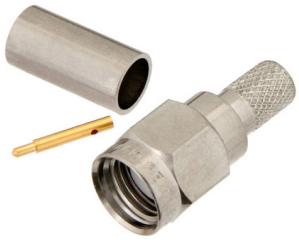

# SMA Male Connector Crimp/Solder Attachment for RG58, RG303, RG141, PE-C195, LMR-195, 0.195 inch

## RF Connectors
## Technical Data Sheet

**PE4215**

## Configuration

- SMA Male Connector
- MIL-STD-348A
- 50 Ohms
- Straight Body Geometry
- Connector Interface Types: RG58, RG303, RG141, PE-C195, LMR-195, 0.195 inch
- 5/16 inch Hex

## Features

- Max. Operating Frequency 12.4 GHz
- Good VSWR of 1.5:1
- Gold Plated Brass Contact
- 50 µin minimum contact plating

## Applications

- General Purpose Test
- Custom Cable Assemblies

### Description

Pasternack's PE4215 SMA male connector with crimp/solder attachment for RG58, RG303, RG141, PE-C195, LMR-195 and 0.195 inch is part of our full line of RF components available for same-day shipping. Our SMA male connector operates up to a maximum frequency of 12.4 GHz and offers good VSWR of 1.5:1.

Our SMA male connector PE4215 datasheet specifications and drawing with dimensions are shown below in this PDF. Pasternack's broad catalog of RF, microwave and millimeter wave connectors allows designers to configure and customize their signal connections however they like. Whether the need is to provide an I/O for a board design, or simply create a custom cable assembly configuration, Pasternack has the right connector for the job. Pasternack can also expertly build your custom cable assemblies for you and ship same-day.

### Electrical Specifications

| Description | Minimum | Typical | Maximum | Units |
|---|---|---|---|---|
| Frequency Range | DC | | 12.4 | GHz |
| VSWR | | | 1.5:1 | |
| Operating Voltage (AC) | | | 500 | Vrms |
| Dielectric Withstanding Voltage (AC) | | | 1,000 | Vrms |

### Mechanical Specifications

| | |
|---|---|
| **Size** | |
| Length | 0.906 in [23.01 mm] |
| Width/Dia. | 0.315 in [8.00 mm] |
| Weight | 0.016 lbs [7.26 g] |
| Mating Torque | 3 to 5 in-lbs [0.34 to 0.57 Nm] |

Click the following link (or enter part number in "SEARCH" on website) to obtain additional part information including price, inventory and certifications: SMA Male Connector Crimp/Solder Attachment for RG58, RG303, RG141, PE-C195, LMR-195, 0.195 inch PE4215

Pasternack Enterprises, Inc. • P.O. Box 16759, Irvine, CA 92623
**Phone:** (866) 727-8376 or (949) 261-1920 • **Fax:** (949) 261-7451
Sales@Pasternack.com • Techsupport@Pasternack.com

© 2020 Pasternack Enterprises All Rights Reserved

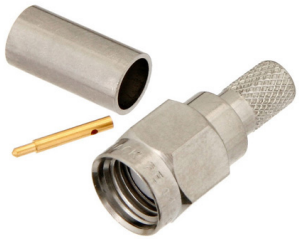

# SMA Male Connector Crimp/Solder Attachment for RG58, RG303, RG141, PE-C195, LMR-195, 0.195 inch



### Material Specifications

| Description | Material | Plating |
|---|---|---|
| Contact | Brass | Gold<br>50 µin minimum |
| Insulation | PTFE | |
| Body | Brass | Nickel<br>100 µin minimum |
| Coupling Nut | Brass | Nickel<br>100 µin minimum |
| Crimp Sleeve | Brass | Nickel |

## Environmental Specifications

**Temperature**

Operating Range -65 to +165 deg C

## Compliance Certifications (see product page for current document)

## Plotted and Other Data

Notes:

SMA Male Connector Crimp/Solder Attachment for RG58, RG303, RG141, PE-C195, LMR-195, 0.195 inch from Pasternack Enterprises has same day shipment for domestic and International orders. Our RF, microwave and millimeter wave products maintain a 99.4% availability and are part of the broadest selection in the industry.

Click the following link (or enter part number in “SEARCH” on website) to obtain additional part information including price, inventory and certifications: SMA Male Connector Crimp/Solder Attachment for RG58, RG303, RG141, PE-C195, LMR-195, 0.195 inch PE4215

URL: https://www.pasternack.com/sma-male-standard-rg58-connector-pe4215-p.aspx

The information contained in this document is accurate to the best of our knowledge and representative of the part described herein. It may be necessary to make modifications to the part and/or the documentation of the part, in order to implement improvements. Pasternack reserves the right to make such changes as required. Unless otherwise stated, all specifications are nominal. Pasternack does not make any representation or warranty regarding the suitability of the part described herein for any particular purpose, and Pasternack does not assume any liability arising out of the use of any part or documentation.

Pasternack Enterprises, Inc. • P.O. Box 16759, Irvine, CA 92623
**Phone:** (866) 727-8376 or (949) 261-1920 • **Fax:** (949) 261-7451
Sales@Pasternack.com • Techsupport@Pasternack.com

© 2020 Pasternack Enterprises All Rights Reserved

# PE4215 CAD Drawing

SMA Male Connector Crimp/Solder Attachment for RG58, RG303, RG141, PE-C195, LMR-195, 0.195 inch

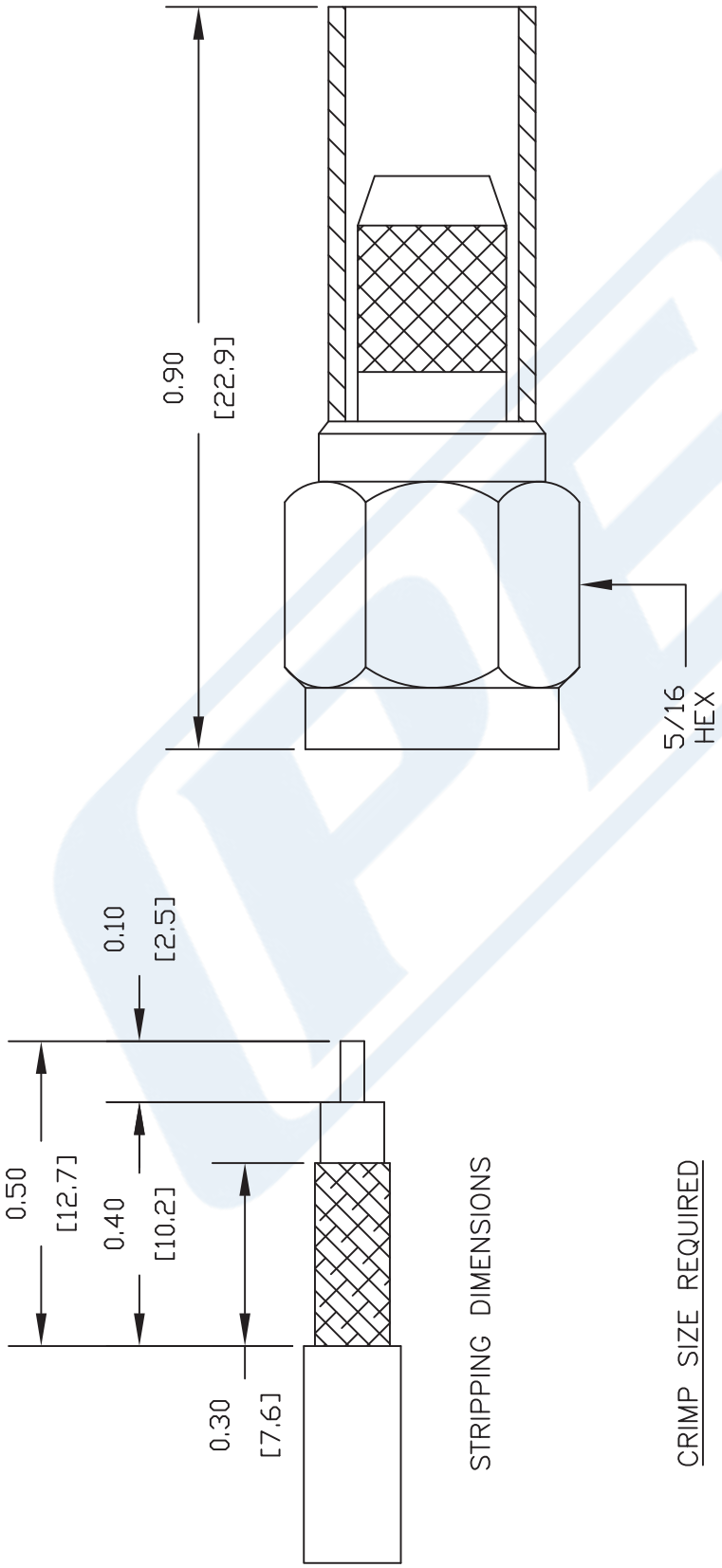


NOTES:
1. UNLESS OTHERWISE SPECIFIED ALL DIMENSIONS ARE NOMINAL.
2. ALL SPECIFICATIONS ARE SUBJECT TO CHANGE WITHOUT NOTICE AT ANY TIME.
3. DIMENSIONS ARE IN INCHES [mm].
4. FITS MIL-C-17 AND EQUIVALENT CABLES.

DWG TITLE **PE4215**

| REV. - | FSCM NO. 53919 | CAD FILE 010611 | SCALE N/A | SIZE A | 127 |
|---|---|---|---|---|---|


PASTERNACK®
Pasternack Enterprises, Inc.
P.O. Box 16759 | Irvine | CA | 92623
**Phone:** (949) 261-1920 | **Fax:** (949) 261-7451
**Website:** www.pasternack.com | **E-Mail:** sales@pasternack.com


© 2020 Pasternack Enterprises All Rights Reserved

PASTERNACK
an INFINITE brand

# 40kV Flexible RG303 High Voltage Coax Cable Single Shielded with Red PUR Jacket

## RF Cables
## Technical Data Sheet

**RG303HV**

## Configuration

- 1 Shield(s)

## Features

- Voltage rating up to 40kV
- Low Signal Attenuation
- Robust Insulation
- Flexible and Durable

## Applications

- Semiconductor Testing
- Radar Systems
- Broadcast Stations
- Research and Development
- Military and Defense

### Description

RG303HV part number from Pasternack is a coax cable that is flexible. Pasternack's flexible coax RF cable has an im-pedance of 50 Ohm and PE dielectric. Our RG303HV coax cable is constructed with a 0.169-inch jacket made of FEP. Our coax cable from Pasternack has a maximum frequency of 3000 MHz. This red colored coax cable has a 0.138-inch shield layer of Silver Copper. Additional specifications for this RG303HV single-shielded RF coaxial cable are on our downloadable PDF datasheet above. Our RG303HV coax cable has a maximum operating temperature of 70 degrees C. This 40kV red colored flexible RF cable with a 50 Ohm impedance has a typical insertion loss/maximum attenuation of 0.22 dB/ft at a frequency of 3000 MHz. The RG303HV flexible RF cable has a silver center conductor with a copper clad aluminum conductor plating.

The RG303 high-voltage RF cable is engineered specifically for radio frequency applications that require the handling of ex-tremely high voltages. With a rated voltage of 40kV, this cable is designed to safely and efficiently transmit high-voltage RF signals. It is commonly utilized in industrial applications where reliable and robust RF signal distribution is critical. The RG303 cable is constructed with high-quality insulation materials and conductors to minimize signal loss and ensure optimal perfor-mance. Adhering to safety guidelines and proper installation practices are essential when working with this cable to maintain electrical safety and preserve signal integrity. Pasternack RG303HV coax cables are part of over 40,000 RF, microwave, and millimeter wave components. These flexible RF cables and our other RF parts are available for same-day shipping worldwide. Custom RF cable assemblies using RG303HV other coax can be built and shipped the same business day as well.

### Electrical Specifications

| Description | Minimum | Typical | Maximum | Units |
|---|---|---|---|---|
| Frequency Range | DC | | 3 | GHz |
| Impedance | | 50 | | Ohms |
| Operating Voltage (DC) | | | 40,000 | Vdc |
| Nominal Capacitance | | 308.4 [1,011.81] | | pF/ft [pF/m] |
| Test Voltage (Conductor/Braid) | | 80 | | kVoc/1min |
| Test Voltage (Spark Test, Core) | | 15 | | kVac |
| Test Voltage (Spark Test, Jacket) | | 5 | | kVac |
| Test Voltage (Type Test) | | 64 | | kVoc |

Click the following link (or enter part number in "SEARCH" on website) to obtain additional part information including price, inventory and certifications: 40kV Flexible RG303 High Voltage Coax Cable Single Shielded with Red PUR Jacket RG303HV

Pasternack Enterprises, Inc. • P.O. Box 16759, Irvine, CA 92623
**Phone:** (866) 727-8376 or (949) 261-1920 • **Fax:** (949) 261-7451
Sales@Pasternack.com • Techsupport@Pasternack.com

© 2020 Pasternack Enterprises All Rights Reserved

# 40kV Flexible RG303 High Voltage Coax Cable Single Shielded with Red PUR Jacket

## RF Cables
## Technical Data Sheet

**RG303HV**

### Performance by Frequency Band

| Description | F1 | F2 | F3 | F4 | F5 | Units |
|---|---|---|---|---|---|---|
| Frequency | 0.05 | 0.4 | 1 | 3 | | GHz |
| Attenuation, Typ | 2.48 | 7.35 | 12.09 | 22.52 | | dB/100ft |
| | 8.14 | 24.11 | 39.67 | 73.88 | | dB/100m |

### Mechanical Specifications

| | |
|---|---|
| Diameter | 0.169 in [4.29 mm} |
| Weight | 0.027 lbs/ft [0.04 kg/m] |
| Min. Bend Radius (Repeated) | 0.788 in [20.02 mm] |

### Construction Specifications

| Description | Material and Plating | Diameter |
|---|---|---|
| Inner Conductor | Silver, Copper Clad Aluminum, Strand | 0.037 in [0.94 mm] |
| Conductor Type | | |
| Dielectric | FEP | 0.116 in [2.95 mm] |
| First Shield | Silver Copper | 0.138 in [3.51 mm] |
| Jacket | FEP, Red | 0.169 in [4.29 mm] |

### Environmental Specifications

**Temperature**

| | |
|---|---|
| Operating Range | -65 to +200 deg C |

Click the following link (or enter part number in “SEARCH” on website) to obtain additional part information including price, inventory and certifications: 40kV Flexible RG303 High Voltage Coax Cable Single Shielded with Red PUR Jacket RG303HV

Pasternack Enterprises, Inc. • P.O. Box 16759, Irvine, CA 92623
**Phone:** (866) 727-8376 or (949) 261-1920 • **Fax:** (949) 261-7451
Sales@Pasternack.com • Techsupport@Pasternack.com

© 2020 Pasternack Enterprises All Rights Reserved

# 40kV Flexible RG303 High Voltage Coax Cable Single Shielded with Red PUR Jacket



**Compliance Certifications** (see product page for current document)

**Plotted and Other Data**

Notes:

- 1) All tests preformed in accordacne with MIL-DTL-17 (current issue).
  2) All materials are RoHS and REACH compliant.

40kV Flexible RG303 High Voltage Coax Cable Single Shielded with Red PUR Jacket from Pasternack Enterprises has same day shipment for domestic and International orders. Our RF, microwave and millimeter wave products maintain a 99.4% availability and are part of the broadest selection in the industry.

Click the following link (or enter part number in “SEARCH” on website) to obtain additional part information including price, inventory and certifications: 40kV Flexible RG303 High Voltage Coax Cable Single Shielded with Red PUR Jacket RG303HV

URL: https://www.pasternack.com/flexible-rg303-fep-jacket-silver-copper-outer-conductor-single-shielded-rg303hv-p.aspx

The information contained in this document is accurate to the best of our knowledge and representative of the part described herein. It may be necessary to make modifications to the part and/or the documentation of the part, in order to implement improvements. Pasternack reserves the right to make such changes as required. Unless otherwise stated, all specifications are nominal. Pasternack does not make any representation or warranty regarding the suitability of the part described herein for any particular purpose, and Pasternack does not assume any liability arising out of the use of any part or documentation.

Pasternack Enterprises, Inc. • P.O. Box 16759, Irvine, CA 92623
**Phone:** (866) 727-8376 or (949) 261-1920 • **Fax:** (949) 261-7451
Sales@Pasternack.com • Techsupport@Pasternack.com

© 2020 Pasternack Enterprises All Rights Reserved

# RG303HV CAD Drawing

40kV Flexible RG303 High Voltage Coax Cable Single Shielded with Red PUR Jacket

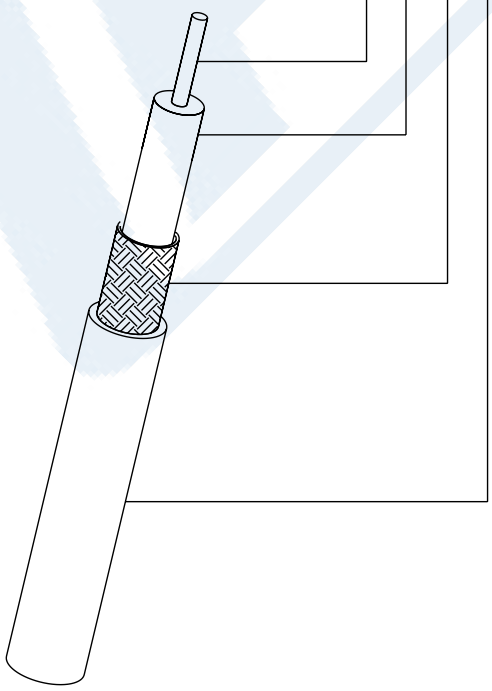

| | | |
|---|---|---|
| Center Conductor | Ø.037 [0.94] | Silver Copper |
| Dielectric | Ø.116 [2.95] | FEP (Fluorinated Ethylene Propylene) |
| Braid | Ø.138 [3.51] | Silver Copper |
| Jacket | Ø.169 [4.29] | Red FEP (Fluorinated Ethylene Propylene) |

REVISION

| ZONE | REV | DESCRIPTION | DATE | CHANGED BY | APPROVED |
|---|---|---|---|---|---|
| | A | INITIAL RELEASE | 05/05/2023 | PSRINIVAS | AGANWANI |

UNLESS OTHERWISE SPECIFIED
LEADING DIMENSIONS ARE INCHES
DIMENSIONS IN [ ] ARE MILLIMETERS

TOLERANCES:
.X = ± .2 [ .5 ] | FRACTIONS ± 1/32
.XX = ± .02 [ .5 ] | ANGLES ± 1°
.XXX = ± .005 [ .13 ]

CABLE LENGTH TOLERANCES:
≤12 [305] = +1 [25] / -0
>12 [305] ≤ 60 [1524] = +2 [51] / -0
>60 [1524] ≤ 120 [3048] = +4 [102] / -0
>120 [3048] ≤ 300 [7620] = +6 [152] / -0
>300 [7620] = +5% / -0

ALL DIMENSIONS ARE FOR REFERENCE ONLY AND SUBJECT TO CHANGE WITHOUT NOTICE.

PASTERNACK® an INFINITE brand

Website: www.Pasternack.com
Phone: 1.866.727.8376 | 1.949.261.1920

INTERPRET ALL DIMENSIONS AND TOLERANCES PER ASME Y14.5

SCALE: NONE | SHEET: 1 OF 1

DESCRIPTION: Flexible RG303 High Voltage Coax Cable Single Shielded with Red PUR Jacket

| SIZE | CAGE CODE | DRAWN BY | ITEM NO. | REV |
|---|---|---|---|---|
| A | 53919 | PSRINIVAS | RG303HV | A |

THE INFORMATION CONTAINED IN THIS DRAWING IS THE SOLE PROPERTY OF INFINITE ELECTRONICS, INC. ANY REPRODUCTION IN PART OR WHOLE WITHOUT THE WRITTEN PERMISSION OF INFINITE ELECTRONICS, INC. IS PROHIBITED. THESE COMMODITIES, TECHNOLOGY OR SOFTWARE WERE EXPORTED FROM THE UNITED STATES IN ACCORDANCE WITH THE EXPORT ADMINISTRATION REGULATIONS. DIVERSION CONTRARY TO U.S. LAW PROHIBITED.

T-Rev.D2

© 2020 Pasternack Enterprises All Rights Reserved