PASTERNACK®
THE ENGINEER'S RF SOURCE

SHV Plug Connector Crimp/Solder Attachment for RG58, RG303, RG141, PE-C195, PE-P195, LMR-195, 0.195 inch

Configuration

- SHV Plug Connector
- MIL-STD-348A
- 50 Ohms
- Straight Body Geometry
- RG58, RG303, RG141, PE-C195, PE-P195, LMR-195, 0.195 inch Interface Type
- Crimp/Solder Attachment

Features

- Max. Operating Frequency 300 MHz
- Good VSWR of 1.3:1
- Gold Plated Brass Contact
- 30 µin minimum contact plating

Applications

- General Purpose Test
- Custom Cable Assemblies

Description

Pasternack's PE4194 SHV plug connector with crimp/solder attachment for RG58, RG303, RG141, PE-C195, PE-P195, LMR-195 and 0.195 inch is part of our full line of RF components available for same-day shipping. Our SHV plug connector operates up to a maximum frequency of 300 MHz and offers good VSWR of 1.3:1.

Our SHV plug connector PE4194 datasheet specifications and drawing with dimensions are shown below in this PDF. Pasternack's broad catalog of RF, microwave and millimeter wave connectors allows designers to configure and customize their signal connections however they like. Whether the need is to provide an I/O for a board design, or simply create a custom cable assembly configuration, Pasternack has the right connector for the job. Pasternack can also expertly build your custom cable assemblies for you and ship same-day.

Electrical Specifications

Description	Minimum	Typical	Maximum	Units
Frequency Range	DC		300	MHz
VSWR			1.3:1	
Operating Voltage (AC)			1,400	Vrms

Mechanical Specifications

Size

Length	1.778 in [45.16 mm]
Width/Dia.	0.571 in [14.50 mm]
Weight	0.035 lbs [15.88 g]

Click the following link (or enter part number in "SEARCH" on website) to obtain additional part information including price, inventory and certifications: SHV Plug Connector Crimp/Solder Attachment for RG58, RG303, RG141, PE-C195, PE-P195, LMR-195, 0.195 inch PE4194

Pasternack Enterprises, Inc. • P.O. Box 16759, Irvine, CA 92623
Phone: (866) 727-8376 or (949) 261-1920 • **Fax:** (949) 261-7451
Sales@Pasternack.com • Techsupport@Pasternack.com

© 2016 Pasternack Enterprises All Rights Reserved

SHV Plug Connector Crimp/Solder Attachment for RG58, RG303, RG141, PE-C195, PE-P195, LMR-195, 0.195 inch

Material Specifications

Description	Material	Plating
Contact	Brass	Gold 30 µin minimum
Insulation	PTFE	
Body	Brass	Nickel 100 µin minimum
Coupling Nut	Brass	Nickel 100 µin minimum
Crimp Sleeve	Brass	Nickel

Environmental Specifications

Temperature

Operating Range -65 to +165 deg C

Compliance Certifications (see product page for current document)

Plotted and Other Data

Notes:

SHV Plug Connector Crimp/Solder Attachment for RG58, RG303, RG141, PE-C195, PE-P195, LMR-195, 0.195 inch from Pasternack Enterprises has same day shipment for domestic and International orders. Our RF, microwave and millimeter wave products maintain a 99% availability and are part of the broadest selection in the industry.

Click the following link (or enter part number in "SEARCH" on website) to obtain additional part information including price, inventory and certifications: SHV Plug Connector Crimp/Solder Attachment for RG58, RG303, RG141, PE-C195, PE-P195, LMR-195, 0.195 inch PE4194

URL: https://www.pasternack.com/shv-plug-standard-rg58-connector-pe4194-p.aspx

The information contained in this document is accurate to the best of our knowledge and representative of the part described herein. It may be necessary to make modifications to the part and/or the documentation of the part, in order to implement improvements. Pasternack reserves the right to make such changes as required. Unless otherwise stated, all specifications are nominal. Pasternack does not make any representation or warranty regarding the suitability of the part described herein for any particular purpose, and Pasternack does not assume any liability arising out of the use of any part or documentation.

Pasternack Enterprises, Inc. • P.O. Box 16759, Irvine, CA 92623
Phone: (866) 727-8376 or (949) 261-1920 • **Fax:** (949) 261-7451
Sales@Pasternack.com • Techsupport@Pasternack.com

© 2016 Pasternack Enterprises All Rights Reserved

PE4194 CAD Drawing

SHV Plug Connector Crimp/Solder Attachment for RG58, RG303, RG141, PE-C195, PE-P195, LMR-195, 0.195 inch

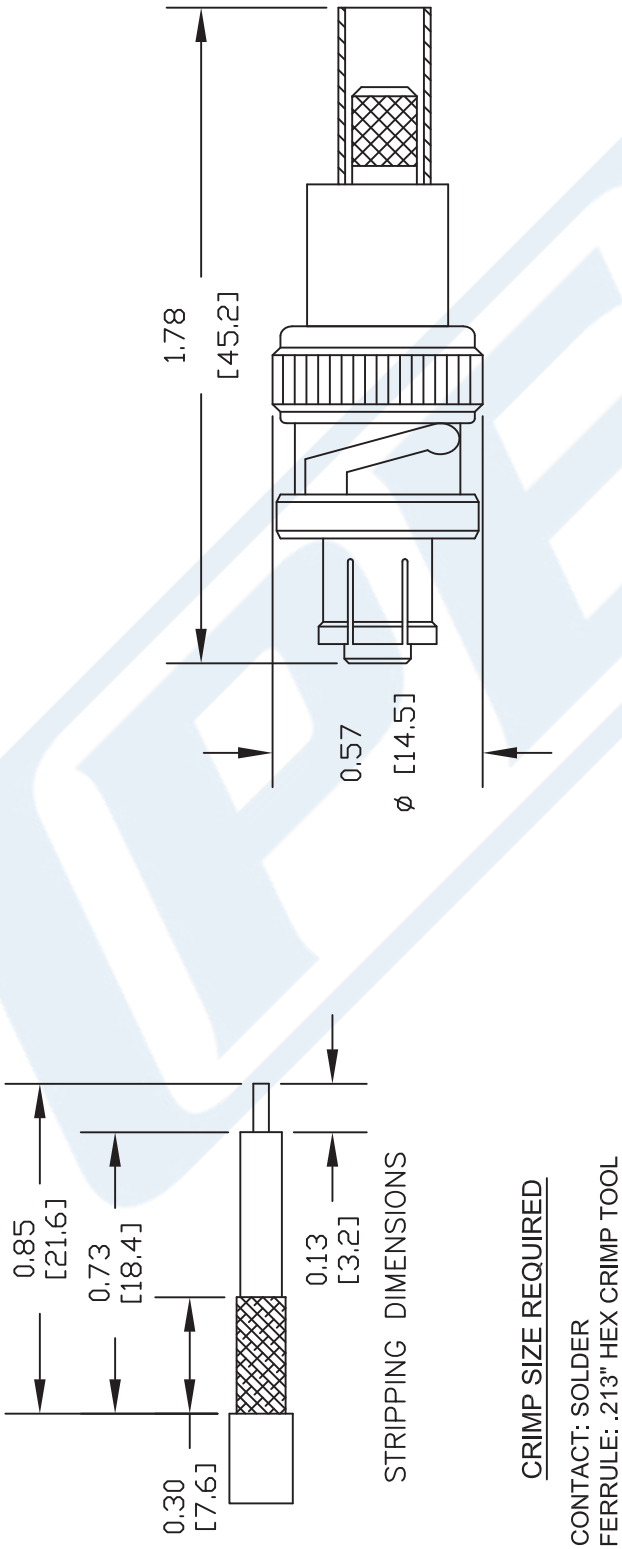

NOTES:
1. UNLESS OTHERWISE SPECIFIED ALL DIMENSIONS ARE NOMINAL.
2. ALL SPECIFICATIONS ARE SUBJECT TO CHANGE WITHOUT NOTICE AT ANY TIME.
3. DIMENSIONS ARE IN INCHES [mm].
4. FITS MIL-C-17 AND EQUIVALENT CABLES.

DWG TITLE **PE4194**

REV. -	FSCM NO. 53919	CAD FILE 042309	SCALE N/A	SIZE A	147

PASTERNACK®
Pasternack Enterprises, Inc.
P.O. Box 16759 | Irvine | CA | 92623
Phone: (949) 261-1920 | **Fax:** (949) 261-7451
Website: www.pasternack.com | **E-Mail:** sales@pasternack.com

© 2016 Pasternack Enterprises All Rights Reserved

PASTERNACK
an INFINITE brand

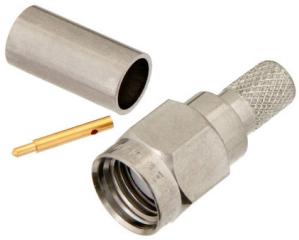

SMA Male Connector Crimp/Solder Attachment for RG58, RG303, RG141, PE-C195, LMR-195, 0.195 inch

RF Connectors
Technical Data Sheet

PE4215

Configuration

- SMA Male Connector
- MIL-STD-348A
- 50 Ohms
- Straight Body Geometry
- Connector Interface Types: RG58, RG303, RG141, PE-C195, LMR-195, 0.195 inch
- 5/16 inch Hex

Features

- Max. Operating Frequency 12.4 GHz
- Good VSWR of 1.5:1
- Gold Plated Brass Contact
- 50 µin minimum contact plating

Applications

- General Purpose Test
- Custom Cable Assemblies

Description

Pasternack's PE4215 SMA male connector with crimp/solder attachment for RG58, RG303, RG141, PE-C195, LMR-195 and 0.195 inch is part of our full line of RF components available for same-day shipping. Our SMA male connector operates up to a maximum frequency of 12.4 GHz and offers good VSWR of 1.5:1.

Our SMA male connector PE4215 datasheet specifications and drawing with dimensions are shown below in this PDF. Pasternack's broad catalog of RF, microwave and millimeter wave connectors allows designers to configure and customize their signal connections however they like. Whether the need is to provide an I/O for a board design, or simply create a custom cable assembly configuration, Pasternack has the right connector for the job. Pasternack can also expertly build your custom cable assemblies for you and ship same-day.

Electrical Specifications

Description	Minimum	Typical	Maximum	Units
Frequency Range	DC		12.4	GHz
VSWR			1.5:1	
Operating Voltage (AC)			500	Vrms
Dielectric Withstanding Voltage (AC)			1,000	Vrms

Mechanical Specifications

Size	
Length	0.906 in [23.01 mm]
Width/Dia.	0.315 in [8.00 mm]
Weight	0.016 lbs [7.26 g]
Mating Torque	3 to 5 in-lbs [0.34 to 0.57 Nm]

Click the following link (or enter part number in "SEARCH" on website) to obtain additional part information including price, inventory and certifications: SMA Male Connector Crimp/Solder Attachment for RG58, RG303, RG141, PE-C195, LMR-195, 0.195 inch PE4215

Pasternack Enterprises, Inc. • P.O. Box 16759, Irvine, CA 92623
Phone: (866) 727-8376 or (949) 261-1920 • **Fax:** (949) 261-7451
Sales@Pasternack.com • Techsupport@Pasternack.com

© 2020 Pasternack Enterprises All Rights Reserved

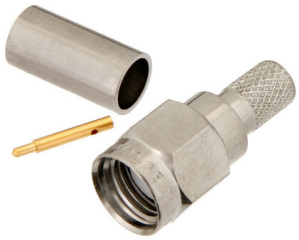

SMA Male Connector Crimp/Solder Attachment for RG58, RG303, RG141, PE-C195, LMR-195, 0.195 inch

Material Specifications

Description	Material	Plating
Contact	Brass	Gold 50 µin minimum
Insulation	PTFE	
Body	Brass	Nickel 100 µin minimum
Coupling Nut	Brass	Nickel 100 µin minimum
Crimp Sleeve	Brass	Nickel

Environmental Specifications

Temperature

Operating Range -65 to +165 deg C

Compliance Certifications (see product page for current document)

Plotted and Other Data

Notes:

SMA Male Connector Crimp/Solder Attachment for RG58, RG303, RG141, PE-C195, LMR-195, 0.195 inch from Pasternack Enterprises has same day shipment for domestic and International orders. Our RF, microwave and millimeter wave products maintain a 99.4% availability and are part of the broadest selection in the industry.

Click the following link (or enter part number in “SEARCH” on website) to obtain additional part information including price, inventory and certifications: SMA Male Connector Crimp/Solder Attachment for RG58, RG303, RG141, PE-C195, LMR-195, 0.195 inch PE4215

URL: https://www.pasternack.com/sma-male-standard-rg58-connector-pe4215-p.aspx

The information contained in this document is accurate to the best of our knowledge and representative of the part described herein. It may be necessary to make modifications to the part and/or the documentation of the part, in order to implement improvements. Pasternack reserves the right to make such changes as required. Unless otherwise stated, all specifications are nominal. Pasternack does not make any representation or warranty regarding the suitability of the part described herein for any particular purpose, and Pasternack does not assume any liability arising out of the use of any part or documentation.

Pasternack Enterprises, Inc. • P.O. Box 16759, Irvine, CA 92623
Phone: (866) 727-8376 or (949) 261-1920 • **Fax:** (949) 261-7451
Sales@Pasternack.com • Techsupport@Pasternack.com

© 2020 Pasternack Enterprises All Rights Reserved

PE4215 CAD Drawing

SMA Male Connector Crimp/Solder Attachment for RG58, RG303, RG141, PE-C195, LMR-195, 0.195 inch

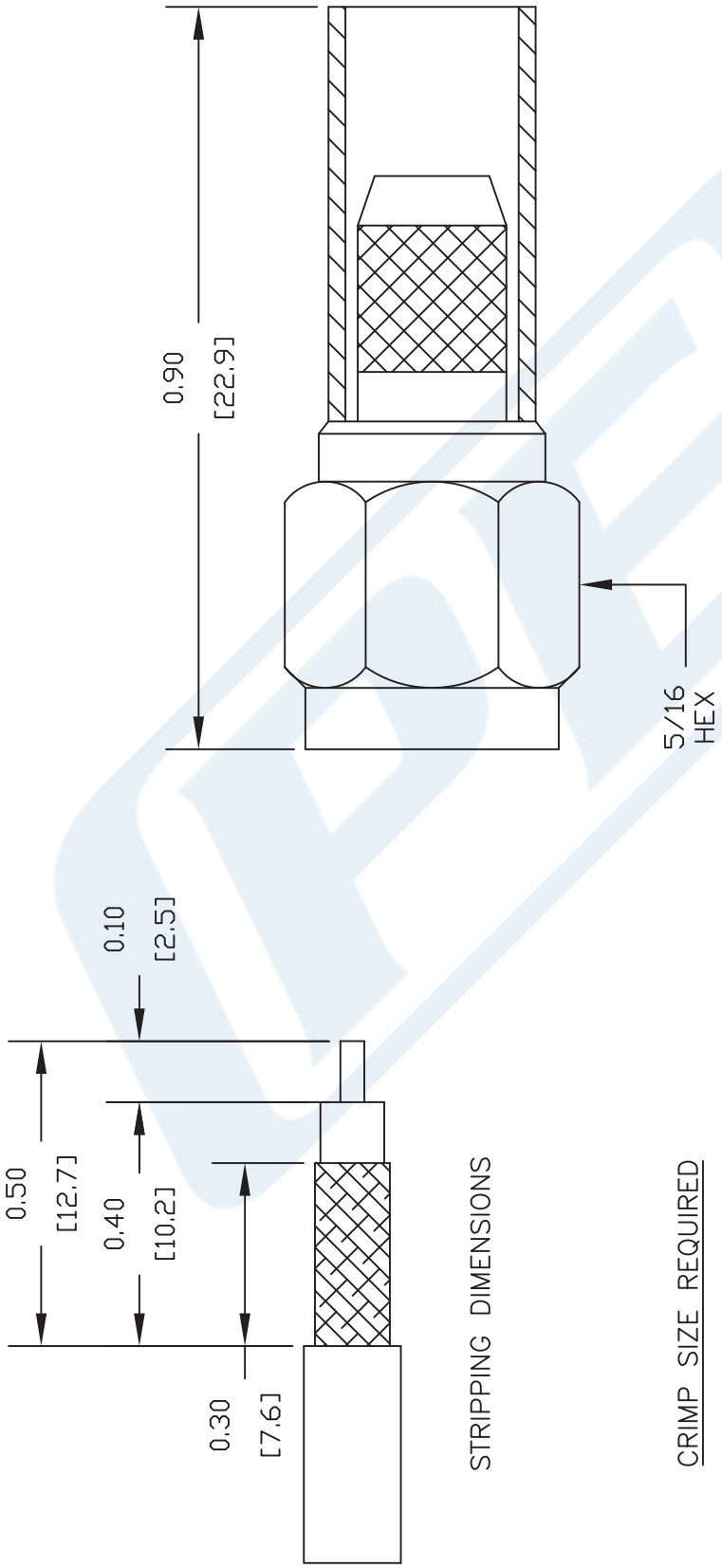

NOTES:
1. UNLESS OTHERWISE SPECIFIED ALL DIMENSIONS ARE NOMINAL.
2. ALL SPECIFICATIONS ARE SUBJECT TO CHANGE WITHOUT NOTICE AT ANY TIME.
3. DIMENSIONS ARE IN INCHES [mm].
4. FITS MIL-C-17 AND EQUIVALENT CABLES.

DWG TITLE **PE4215**

REV. -	FSCM NO. 53919	CAD FILE 010611	SCALE N/A	SIZE A	127

PASTERNACK®
Pasternack Enterprises, Inc.
P.O. Box 16759 | Irvine | CA | 92623
Phone: (949) 261-1920 | **Fax:** (949) 261-7451
Website: www.pasternack.com | **E-Mail:** sales@pasternack.com

© 2020 Pasternack Enterprises All Rights Reserved

LMR-195-UF Ultra Flex version of the 195 series Low Loss Coax

RF Cables
Technical Data Sheet

LMR-195-UF

Times Microwave Systems Coax Cable Specification

Configuration

- Low Loss, Outdoor Flexible Cable
- 2 Shield(s)

Features

- Ultra Flexible Coax with Stranded Center Conductor
- Max Operating Frequency of 5.8 GHz
- Phase Velocity 74% VoP
- Max Operating Temperature +85°C
- TPE Jacket
- Min Install Bend Radius of 0.5 inches

Applications

- RF Test Systems
- Antenna Installs
- Laboratory Applications
- General Purpose RF Interconnect
- Jumper Assemblies

Description

LMR-195-UF Ultra Flex version of the 195 series Low Loss Coax from Times Microwave is part of the large product offering by Pasternack of radio frequency coaxial cable types specifically stocked to be ready for same-day shipment. Pasternack LMR-195-UF coax cable is manufactured in an ultra flexible design and has a 50 Ohm impedance. This low loss and ultra flexible 50 Ohm coax cable LMR-195-UF is constructed with a 0.195 inch diameter and Black TPE jacket.

LMR-195-UF flexible 50 Ohm coax cable with TPE jacket is rated for a 5.8 GHz maximum operating frequency. This 50 Ohm 0.195 inch diameter and low loss ultra flexible coax cable is built with an aluminum double shield count and RF shielding of 90 dB. Times Microwave LMR-195-UF TPE coax is constructed with Foam PE dielectric and a maximum operating temperature of 85 degrees C. Pasternack's offering of LMR-195-UF coax cable provides specs for this wire on its RF coax cable LMR-195-UF datasheet.

LMR-195-UF cable is part of more than one million RF, microwave parts in stock at Pasternack. This Times Microwave low loss ultra flexible LMR-195-UF coax cable is ready to buy and can be shipped worldwide. Pasternack also maintains a wide selection of other radio frequency coaxial cable types that ship same-day from our warehouse as with the rest of our other RF/microwave components.

* LMR™ is a trademark of Times Microwave Systems.

Electrical Specifications

Description	Minimum	Typical	Maximum	Units
Frequency Range	DC		5.8	GHz
Impedance		50		Ohms
Velocity of Propagation		74		%
Time Delay		1.27 4.17		ns/ft ns/m
Shielding Effectiveness	90			dB
Dielectric Withstanding Voltage (DC)			1,000	Vdc

Click the following link (or enter part number in "SEARCH" on website) to obtain additional part information including price, inventory and certifications: LMR-195-UF Ultra Flex version of the 195 series Low Loss Coax LMR-195-UF

Pasternack Enterprises, Inc. • P.O. Box 16759, Irvine, CA 92623
Phone: (866) 727-8376 or (949) 261-1920 • **Fax:** (949) 261-7451
Sales@Pasternack.com • Techsupport@Pasternack.com

© 2020 Pasternack Enterprises All Rights Reserved

LMR-195-UF Ultra Flex version of the 195 series Low Loss Coax

Jacket Spark		3,000	Vrms
Inner Conductor DC Resistance		9.5	Ohms/1000ft
Outer Conductor DC Resistance		4.9	Ohms/1000ft
Nominal Capacitance	25.4 [83.33]		pF/ft [pF/m]
Nominal Inductance	0.064 [0.21]		uH/ft [uH/m]
Input Power (Peak)		2.5	kWatts

Performance by Frequency Band

Description	F1	F2	F3	F4	F5	Units
Frequency	50	150	220	450	900	MHz
Attenuation, Typ	3	5.3	6.4	9.3	13.2	dB/100ft
	9.84	17.39	21	30.51	43.31	dB/100m
Input Power (CW), Max	610	350	280	200	140	Watts

Description	F6	F7	F8	F9	F10	Units
Frequency	1.5	1.8	2	2.5	5.8	GHz
Attenuation, Typ	17.3	19	20.1	22.6	35.6	dB/100ft
	56.76	62.34	65.94	74.15	116.8	dB/100m
Input Power (CW), Max	100	90	90	80	50	Watts

Mechanical Specifications

Diameter	0.195 in 4.95 mm
Weight	0.021 lbs/ft [0.03 Kg/m]
Min. Bend Radius (Installation)	0.5 in [12.7 mm]
Min. Bend Radius (Repeated)	2 in [50.8 mm]
Bending Moment	0.1 lbs-ft [0.14 N-m]
Tensile Strength	40 lbs [18.14 kg
Flat Plate Crush	10 lbs/in [0.18 Kg/mm]

Construction Specifications

Description	Material and Plating	Diameter
Inner Conductor	Copper, 1 Strand	0.038 in [0.97 mm]

Click the following link (or enter part number in “SEARCH” on website) to obtain additional part information including price, inventory and certifications: LMR-195-UF Ultra Flex version of the 195 series Low Loss Coax LMR-195-UF

Pasternack Enterprises, Inc. • P.O. Box 16759, Irvine, CA 92623
Phone: (866) 727-8376 or (949) 261-1920 • **Fax:** (949) 261-7451
Sales@Pasternack.com • Techsupport@Pasternack.com

© 2020 Pasternack Enterprises All Rights Reserved

LMR-195-UF Ultra Flex version of the 195 series Low Loss Coax

Conductor Type	Stranded	
Dielectric	Foam PE	0.11 in [2.79 mm]
First Shield	Aluminum Tape	[ ]
Second Shield	Tinned Copper	[ ]
Jacket	TPE, Black	0.195 in [4.95 mm]

Environmental Specifications

Temperature

Operating Range	-40 to +85 deg C
Installation Range	-40 to +85 deg C
Storage Range	-70 to +85 deg C

Compliance Certifications (see product page for current document)

Plotted and Other Data

Notes:

LMR-195-UF Ultra Flex version of the 195 series Low Loss Coax from Pasternack Enterprises has same day shipment for domestic and International orders. Our RF, microwave and millimeter wave products maintain a 99.4% availability and are part of the broadest selection in the industry.

Click the following link (or enter part number in “SEARCH” on website) to obtain additional part information including price, inventory and certifications: LMR-195-UF Ultra Flex version of the 195 series Low Loss Coax LMR-195-UF

URL: https://www.pasternack.com/low-loss-flexible-lmr-195-uf-tpe-jacket-aluminum-tape-over-tinned-copper-outer-conductor-double-shielded-lmr-195-uf-p.aspx

The information contained in this document is accurate to the best of our knowledge and representative of the part described herein. It may be necessary to make modifications to the part and/or the documentation of the part, in order to implement improvements. Pasternack reserves the right to make such changes as required. Unless otherwise stated, all specifications are nominal. Pasternack does not make any representation or warranty regarding the suitability of the part described herein for any particular purpose, and Pasternack does not assume any liability arising out of the use of any part or documentation.

Pasternack Enterprises, Inc. • P.O. Box 16759, Irvine, CA 92623
Phone: (866) 727-8376 or (949) 261-1920 • **Fax:** (949) 261-7451
Sales@Pasternack.com • Techsupport@Pasternack.com

© 2020 Pasternack Enterprises All Rights Reserved

LMR-195-UF CAD Drawing

LMR-195-UF Ultra Flex version of the 195 series Low Loss Coax

REVISIONS

REV.	DESCRIPTION	DATE	APPROVED
A	INITIAL RELEASE	06-04-2021	SELLIS

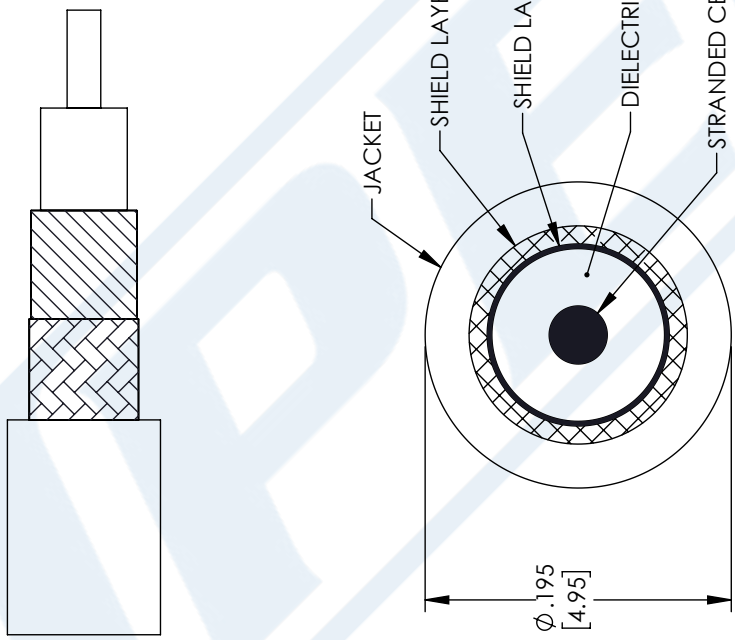

UNLESS OTHERWISE SPECIFIED
LEADING DIMENSIONS ARE INCHES
DIMENSIONS IN [ ] ARE MILLIMETERS

TOLERANCES:

.X = ± .2 [5.08] | FRACTIONS ± 1/32
.XX = ± .02 [.51] | ANGLES ± 1°
.XXX = ± .005 [.13]

CABLE LENGTH (L) TOLERANCES:

L ≤ 12 [305] = +1 [25] / -0
12 [305] < L ≤ 60 [1524] = +2 [51] / -0
60 [1524] < L ≤ 120 [3048] = +4 [102] / -0
120 [3048] < L ≤ 300 [7620] = +6 [152] / -0
300 [7620] < L = +5%L / -0

ALL DIMENSIONS SHOWN ARE FOR REFERENCE ONLY.

PASTERNACK
an INFINITE brand

Pasternack Enterprises, Inc.
P.O.Box 16759, Irvine, CA 92623.
Phone: 1.949.261.1920 | 1.866.727.8376
Fax: 1.949.261.7451
Website: www.pasternack.com
E-mail: sales@pasternack.com

THIRD-ANGLE PROJECTION

THE INFORMATION AND DESIGN IN THIS DOCUMENT IS THE PROPERTY OF PASTERNACK CORPORATION ALL RIGHTS RESERVED.

SHEET 1 OF 1
SCALE N/A

SIZE	CAGE CODE	DRAWN BY	ITEM NO.	REV
A	53919	MVEERAPPAN	LMR-195-UF	A

THESE COMMODITIES, TECHNOLOGY OR SOFTWARE WERE EXPORTED FROM THE UNITED STATES IN ACCORDANCE WITH THE EXPORT ADMINISTRATION REGULATIONS. DIVERSION CONTRARY TO U.S. LAW PROHIBITED.

T-Rev.D