PASTERNACK
an INFINITE brand

2.2-5 Male Low PIM Connector Solder Attachment for PE-1/4SFHC, SPP-250-LLPL, SPO-250, SPF-250

RF Connectors
Technical Data Sheet

PE45673

Configuration

- 2.2-5 Male Connector
- 50 Ohms
- Straight Body Geometry
- Connector Interface Types: PE-1/4SFHC, SPP-250-LL-PL, SPO-250, SPF-250
- Low PIM Design

Features

- Max. Operating Frequency 6 GHz
- PIM levels lower than -155 dBc
- Silver Plated Brass Contact

Applications

- General Purpose Test
- Wireless Communications
- Custom Cable Assemblies
- Low PIM Applications

Description

Pasternack's PE45673 , 2.2-5, Low PIM, Connector is part of our full line of RF components available for same-day shipping. Our 2.2-5 male connector operates up to a maximum frequency of 6 GHz. The 2.2-5 male connector also has low passive intermodulation of -155 dBc.

Our 2.2-5 male connector PE45673 datasheet specifications and drawing with dimensions are shown below in this PDF. Pasternack's broad catalog of RF, microwave and millimeter wave connectors allows designers to configure and customize their signal connections however they like. Whether the need is to provide an I/O for a board design, or simply create a custom cable assembly configuration, Pasternack has the right connector for the job. Pasternack can also expertly build your custom cable assemblies for you and ship same-day.

Electrical Specifications

Description	Minimum	Typical	Maximum	Units
Frequency Range	DC		6	GHz
Passive Intermodulation			-155	dBc
Impedance		50		Ohms
Dielectric Withstanding Voltage (AC)			750	Vrms

Performance by Frequency

Description	F1	F2	F3	F4	F5	Units
Frequency Range	DC to 3	3 to 6				GHz
VSWR, Max	1.15:1	1.25:1				

Click the following link (or enter part number in "SEARCH" on website) to obtain additional part information including price, inventory and certifications: 2.2-5 Male Low PIM Connector Solder Attachment for PE-1/4SFHC, SPP-250-LLPL, SPO-250, SPF-250 PE45673

Pasternack Enterprises, Inc. • P.O. Box 16759, Irvine, CA 92623
Phone: (866) 727-8376 or (949) 261-1920 • **Fax:** (949) 261-7451
Sales@Pasternack.com • Techsupport@Pasternack.com

© 2020 Pasternack Enterprises All Rights Reserved

PASTERNACK
an INFINITE brand

2.2-5 Male Low PIM Connector Solder Attachment for PE-1/4SFHC, SPP-250-LLPL, SPO-250, SPF-250

RF Connectors
Technical Data Sheet

PE45673

Mechanical Specifications

Size

Length	0.89 in [22.61 mm]
Width	0.69 in [17.53 mm]
Height	0.69 in [17.53 mm]
Weight	0.05 lbs [22.68 g]

Material Specifications

Description	Material	Plating
Contact	Brass	Silver
Insulation	PTFE	
Body	Brass	Tri-Metal
Coupling Nut	Brass	Tri-Metal
O-Ring	Silicone	

Environmental Specifications

Temperature

Operating Range	-40 to +155 deg C

Compliance Certifications (see product page for current document)

Plotted and Other Data

Notes:

2.2-5 Male Low PIM Connector Solder Attachment for PE-1/4SFHC, SPP-250-LLPL, SPO-250, SPF-250 from Pasternack Enterprises has same day shipment for domestic and International orders. Our RF, microwave and millimeter wave products maintain a 99.4% availability and are part of the broadest selection in the industry.

Click the following link (or enter part number in “SEARCH” on website) to obtain additional part information including price, inventory and certifications: 2.2-5 Male Low PIM Connector Solder Attachment for PE-1/4SFHC, SPP-250-LLPL, SPO-250, SPF-250 PE45673

URL: https://www.pasternack.com/2.2-5-male-pe-1-4sfhc-spp-250-llpl-connector-pe45673-p.aspx

The information contained in this document is accurate to the best of our knowledge and representative of the part described herein. It may be necessary to make modifications to the part and/or the documentation of the part, in order to implement improvements. Pasternack reserves the right to make such changes as required. Unless otherwise stated, all specifications are nominal. Pasternack does not make any representation or warranty regarding the suitability of the part described herein for any particular purpose, and Pasternack does not assume any liability arising out of the use of any part or documentation.

Pasternack Enterprises, Inc. • P.O. Box 16759, Irvine, CA 92623
Phone: (866) 727-8376 or (949) 261-1920 • **Fax:** (949) 261-7451
Sales@Pasternack.com • Techsupport@Pasternack.com

© 2020 Pasternack Enterprises All Rights Reserved

PE45673 CAD Drawing

2.2-5 Male Low PIM Connector Solder Attachment for PE-1/4SFHC, SPP-250-LLPL, SPO-250, SPF-250

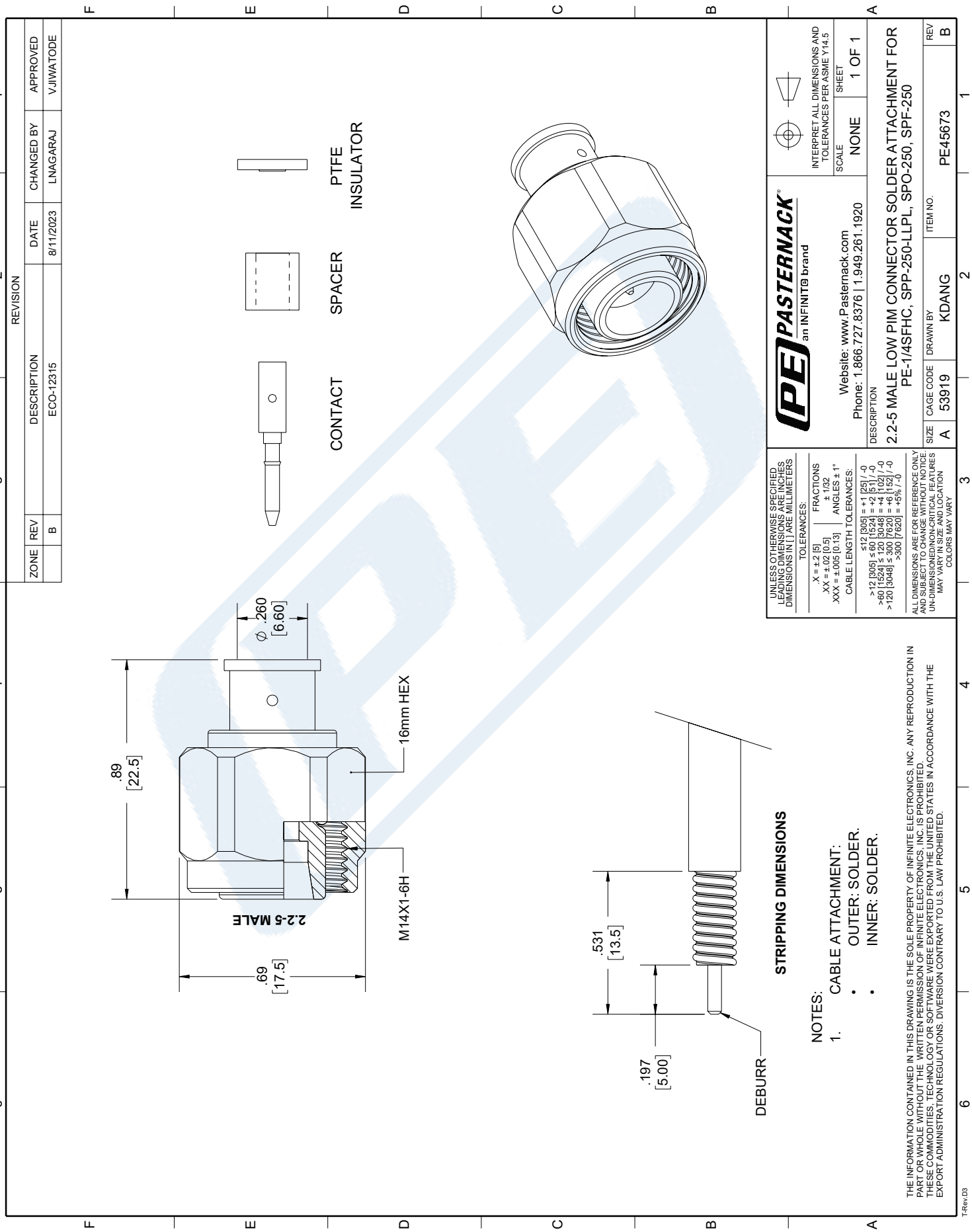

© 2020 Pasternack Enterprises All Rights Reserved

PASTERNACK®
THE ENGINEER'S RF SOURCE

N Female Connector Solder Attachment for SPP-250-LLPL, Low PIM

RF Connectors Technical Data Sheet PE45426

Configuration

- N Female Connector
- 50 Ohms
- Straight Body Geometry
- SPP-250-LLPL Interface Type
- Solder/Solder Attachment

Features

- Max. Operating Frequency 6 GHz
- Good VSWR of 1.3:1
- PIM levels lower than -165 dBc
- Silver Plated Phosphor Bronze Contact

Applications

- General Purpose Test
- Custom Cable Assemblies
- Low PIM Interconnects
- Distributed Antenna Systems (DAS)
- Low PIM Jumpers
- Low PIM Testing
- Low PIM Connections

Description

Pasternack's PE45426 type N female connector with solder/solder attachment for SPP-250-LLPL is part of our full line of RF components available for same-day shipping. Our type N female connector operates up to a maximum frequency of 6 GHz and offers good VSWR of 1.3:1. The type N female connector also has low passive intermodulation of -165 dBc.

Our type N female connector PE45426 datasheet specifications and drawing with dimensions are shown below in this PDF. Pasternack's broad catalog of RF, microwave and millimeter wave connectors allows designers to configure and customize their signal connections however they like. Whether the need is to provide an I/O for a board design, or simply create a custom cable assembly configuration, Pasternack has the right connector for the job. Pasternack can also expertly build your custom cable assemblies for you and ship same-day.

Electrical Specifications

Description	Minimum	Typical	Maximum	Units
Frequency Range	DC		6	GHz
VSWR			1.3:1	
Insertion Loss			0.1	dB
Passive Intermodulation			-165	dBc
Operating Voltage (AC)			250	Vrms
Insulation Resistance	5,000			MOhms

Electrical Specification Notes:
Insertion Loss is 0.04*sqrt(FGHz)

Click the following link (or enter part number in "SEARCH" on website) to obtain additional part information including price, inventory and certifications: N Female Connector Solder Attachment for SPP-250-LLPL, Low PIM PE45426

Pasternack Enterprises, Inc. • P.O. Box 16759, Irvine, CA 92623
Phone: (866) 727-8376 or (949) 261-1920 • **Fax:** (949) 261-7451
Sales@Pasternack.com • Techsupport@Pasternack.com

© 2018 Pasternack Enterprises All Rights Reserved

N Female Connector Solder Attachment for SPP-250-LLPL, Low PIM

Material Specifications

Description	Material	Plating
Contact	Phosphor Bronze	Silver
Insulation	PTFE	
Outer Conductor	Brass	Tri-Metal
Body	Brass	Tri-Metal

Environmental Specifications

Temperature

Operating Range -55 to +165 deg C

Compliance Certifications (see product page for current document)

Plotted and Other Data

Notes:

Click the following link (or enter part number in "SEARCH" on website) to obtain additional part information including price, inventory and certifications: N Female Connector Solder Attachment for SPP-250-LLPL, Low PIM PE45426

Pasternack Enterprises, Inc. • P.O. Box 16759, Irvine, CA 92623
Phone: (866) 727-8376 or (949) 261-1920 • **Fax:** (949) 261-7451
Sales@Pasternack.com • Techsupport@Pasternack.com

© 2018 Pasternack Enterprises All Rights Reserved

N Female Connector Solder Attachment for SPP-250-LLPL, Low PIM

Assembly Instruction

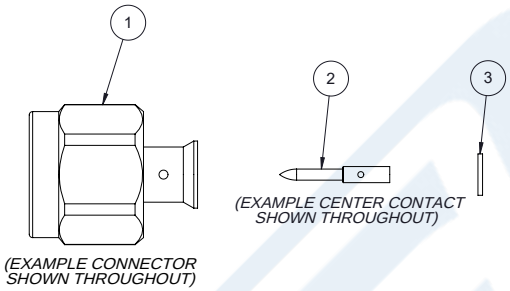

1. STRIP CABLE AS SHOWN, CHAMFER CENTER CONDUCTOR AND DEBURR CABLE.

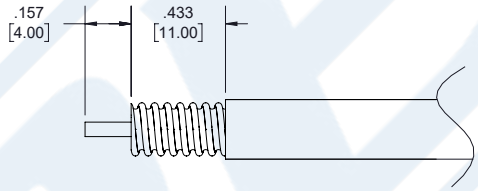

2. SLIDE INSULATOR (3) OVER CABLE CENTER CONDUCTOR. INSERT CENTER CONTACT AND SOLDER. WRAP THE CABLE BY SOLDER WIRE.

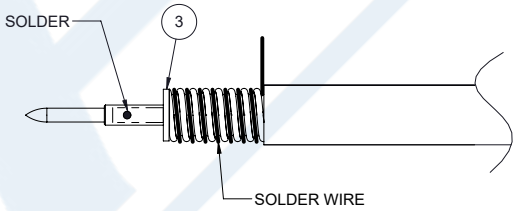

3. PUSH THE CONNECTOR BODY INTO THE CABLE, UNTIL IT STOPS. SOLDER THE CONNECTOR BODY WITH CABLE AND COVER HEATSHRINK SLEEVE.

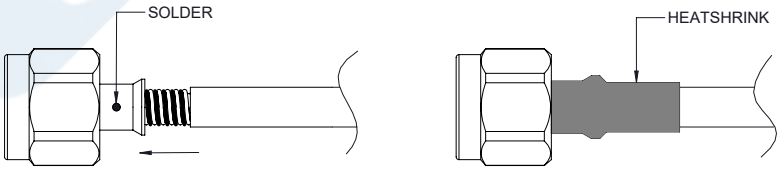

Click the following link (or enter part number in "SEARCH" on website) to obtain additional part information including price, inventory and certifications: N Female Connector Solder Attachment for SPP-250-LLPL, Low PIM PE45426

Pasternack Enterprises, Inc. • P.O. Box 16759, Irvine, CA 92623
Phone: (866) 727-8376 or (949) 261-1920 • **Fax:** (949) 261-7451
Sales@Pasternack.com • Techsupport@Pasternack.com

© 2018 Pasternack Enterprises All Rights Reserved

N Female Connector Solder Attachment for SPP-250-LLPL, Low PIM

RF Connectors Technical Data Sheet PE45426

N Female Connector Solder Attachment for SPP-250-LLPL, Low PIM from Pasternack Enterprises has same day shipment for domestic and International orders. Our RF, microwave and millimeter wave products maintain a 99.4% availability and are part of the broadest selection in the industry.

Click the following link (or enter part number in “SEARCH” on website) to obtain additional part information including price, inventory and certifications: N Female Connector Solder Attachment for SPP-250-LLPL, Low PIM PE45426

URL: https://www.pasternack.com/n-female-spp-250-llpl-connector-pe45426-p.aspx

The information contained in this document is accurate to the best of our knowledge and representative of the part described herein. It may be necessary to make modifications to the part and/or the documentation of the part, in order to implement improvements. Pasternack reserves the right to make such changes as required. Unless otherwise stated, all specifications are nominal. Pasternack does not make any representation or warranty regarding the suitability of the part described herein for any particular purpose, and Pasternack does not assume any liability arising out of the use of any part or documentation.

Pasternack Enterprises, Inc. • P.O. Box 16759, Irvine, CA 92623
Phone: (866) 727-8376 or (949) 261-1920 • **Fax:** (949) 261-7451
Sales@Pasternack.com • Techsupport@Pasternack.com

© 2018 Pasternack Enterprises All Rights Reserved

PE45426 CAD Drawing

N Female Connector Solder Attachment for SPP-250-LLPL, Low PIM

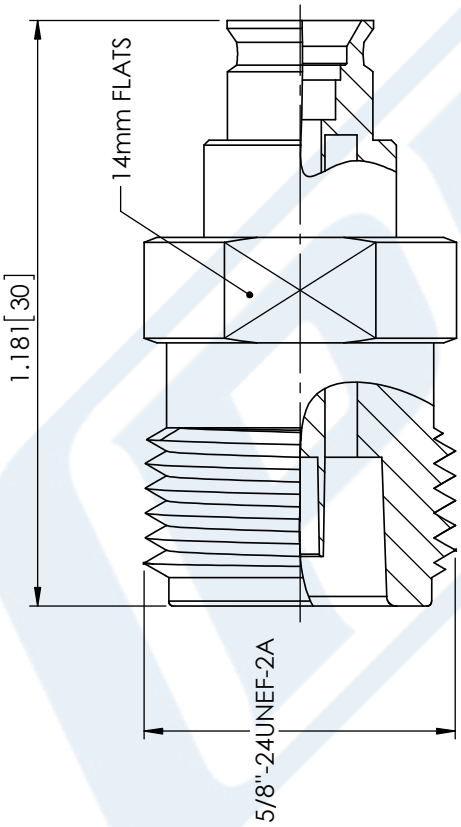

STANDARD TOLERANCES	
.X	±0.2
.XX	±0.01
.XXX	±0.005

*STANDARD TOLERANCES APPLY ONLY TO DIMENSIONS IN INCHES

NOTES:
1. UNLESS OTHERWISE SPECIFIED ALL DIMENSIONS ARE NOMINAL.
2. ALL SPECIFICATIONS ARE SUBJECT TO CHANGE WITHOUT NOTICE AT ANY TIME
3. DIMENSIONS ARE IN INCHES [mm].

DWG TITLE PE45426

CAD FILE 11/22/17

SCALE N/A

SIZE A

CN2245

CAGE CODE 53919

PASTERNACK®
THE ENGINEER'S RF SOURCE
Pasternack Enterprises, Inc.
P.O. Box 16759 | Irvine | CA | 92623
Phone: (949) 261-1920 | **Fax:** (949) 261-7451
Website: www.pasternack.com | **E-Mail:** sales@pasternack.com

© 2018 Pasternack Enterprises All Rights Reserved

PASTERNACK®
THE ENGINEER'S RF SOURCE

Low Loss SPP-250-LLPL Plenum Rated Corrugated Coax Cable with Blue FEP Jacket Superflexible

RF Cables
Technical Data Sheet

TIMES MICROWAVE SYSTEMS An Amphenol Company

SPP-250-LLPL

Times Microwave Systems Coax Cable Specification

Configuration

- Low Loss, Plenum Corrugated Cable

Features

- PIM < -160 dBc
- UL910 Plenum Rated Cable
- Lightweight and Extremely Flexible
- Low Loss
- Great Shielding >100 dB
- UV Resistant Jacket

Applications

- Distributed Antenna Systems (DAS)
- Plenum Installations
- Small Cells
- Multi-Carrier Communication Systems
- PIM Testing

Description

SPP-250-LLPL low loss plenum rated coax cable by Times Microwave is part of our full line of RF components available for same-day shipping. The SPP-250-LLPL coaxial cable features a low loss dielectric, solid copper center conductor and a helically corrugated, copper outer conductor. These features combine to make the Times Microwave SPP-250-LLPL an extremely flexible, low PIM coax cable that is well suited for Distributed Antenna Systems (DAS), plenum installations or small cells. The tough, FEP jacket provides moisture and UV protection.

Our datasheet specifications and drawing with dimensions for Times Microwave SPP-250-LLPL coax cable are shown below in this PDF. Whether the need is to provide a low PIM jumper connection, low PIM feeder cable or simply create a custom cable assembly configuration, Pasternack has the right SPP-250-LLPL cable assemblies for the job.

Electrical Specifications

Description	Minimum	Typical	Maximum	Units
Frequency Range	DC		5.8	GHz
Impedance		50		Ohms
Velocity of Propagation		76		%
Shielding Effectiveness	100			dB
Passive Intermodulation			-160	dBc
Inner Conductor DC Resistance			3	Ohms/1000ft
Nominal Capacitance		27 [88.58]		pF/ft [pF/m]
Nominal Inductance		0.067 [0.22]		uH/ft [uH/m]

Click the following link (or enter part number in "SEARCH" on website) to obtain additional part information including price, inventory and certifications: Low Loss SPP-250-LLPL Plenum Rated Corrugated Coax Cable with Blue FEP Jacket Superflexible SPP-250-LLPL

Pasternack Enterprises, Inc. • P.O. Box 16759, Irvine, CA 92623
Phone: (866) 727-8376 or (949) 261-1920 • **Fax:** (949) 261-7451
Sales@Pasternack.com • Techsupport@Pasternack.com

© 2018 Pasternack Enterprises All Rights Reserved

Low Loss SPP-250-LLPL Plenum Rated Corrugated Coax Cable with Blue FEP Jacket Superflexible

Performance by Frequency Band

Description	F1	F2	F3	F4	F5	Units
Frequency	0.45	1.9	2.3	4.9	5.8	GHz
Attenuation, Typ	3.8	8.1	9	13.5	14.8	dB/100ft
	12.47	26.57	29.53	44.29	48.56	dB/100m
Input Power (CW), Max	1,010	470	430	280	260	Watts

Mechanical Specifications

Diameter	0.28 in [7.11 mm]
Weight	0.072 lbs/ft [0.11 Kg/m]
Min. Bend Radius (Installation)	1.25 in [31.75 mm]
Bending Moment	0.8 lbs-ft [1.08 N-m]

Construction Specifications

Description	Material and Plating	Diameter
Inner Conductor	Copper, 1 Strands	0.068 in [1.73 mm]
Conductor Type	Solid	
Dielectric	PTFE	0.19 in [4.83 mm]
Outer Conductor	Copper Corrugated	0.25 in [6.35 mm]
Jacket	FEP, Blue	0.28 in [7.11 mm]

Environmental Specifications

Temperature

Operating Range	-55 to +200 deg C

Click the following link (or enter part number in "SEARCH" on website) to obtain additional part information including price, inventory and certifications: Low Loss SPP-250-LLPL Plenum Rated Corrugated Coax Cable with Blue FEP Jacket Superflexible SPP-250-LLPL

Pasternack Enterprises, Inc. • P.O. Box 16759, Irvine, CA 92623
Phone: (866) 727-8376 or (949) 261-1920 • **Fax:** (949) 261-7451
Sales@Pasternack.com • Techsupport@Pasternack.com

© 2018 Pasternack Enterprises All Rights Reserved

Low Loss SPP-250-LLPL Plenum Rated Corrugated Coax Cable with Blue FEP Jacket Superflexible

Compliance Certifications (see product page for current document)

Plotted and Other Data

Notes:

Low Loss SPP-250-LLPL Plenum Rated Corrugated Coax Cable with Blue FEP Jacket Superflexible from Pasternack Enterprises has same day shipment for domestic and International orders. Our RF, microwave and millimeter wave products maintain a 99.4% availability and are part of the broadest selection in the industry.

Click the following link (or enter part number in "SEARCH" on website) to obtain additional part information including price, inventory and certifications: Low Loss SPP-250-LLPL Plenum Rated Corrugated Coax Cable with Blue FEP Jacket Superflexible SPP-250-LLPL

URL: https://www.pasternack.com/low-loss-corrugated-spp250llpl-fep-jacket-spp-250-llpl-p.aspx

The information contained in this document is accurate to the best of our knowledge and representative of the part described herein. It may be necessary to make modifications to the part and/or the documentation of the part, in order to implement improvements. Pasternack reserves the right to make such changes as required. Unless otherwise stated, all specifications are nominal. Pasternack does not make any representation or warranty regarding the suitability of the part described herein for any particular purpose, and Pasternack does not assume any liability arising out of the use of any part or documentation.

Pasternack Enterprises, Inc. • P.O. Box 16759, Irvine, CA 92623
Phone: (866) 727-8376 or (949) 261-1920 • **Fax:** (949) 261-7451
Sales@Pasternack.com • Techsupport@Pasternack.com

© 2018 Pasternack Enterprises All Rights Reserved

SPP-250-LLPL CAD Drawing

Low Loss SPP-250-LLPL Plenum Rated Corrugated Coax
Cable with Blue FEP Jacket Superflexible

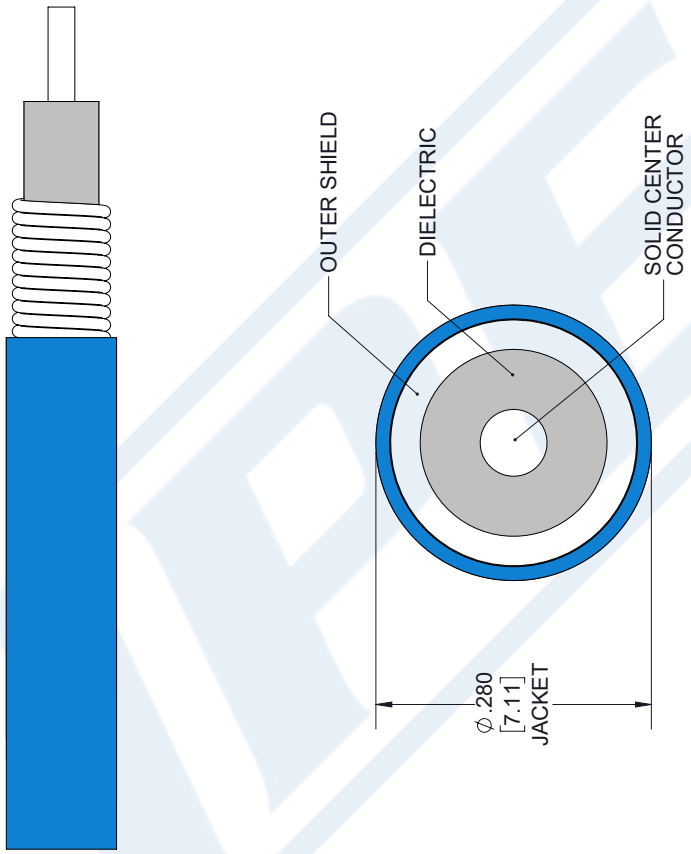

SECTION VIEW

STANDARD TOLERANCES	
.X	±0.2
.XX	±0.01
.XXX	±0.005

*STANDARD TOLERANCES APPLY ONLY TO DIMENSIONS IN INCHES

NOTES:
1. UNLESS OTHERWISE SPECIFIED ALL DIMENSIONS ARE NOMINAL.
2. ALL SPECIFICATIONS ARE SUBJECT TO CHANGE WITHOUT NOTICE AT ANY TIME
3. DIMENSIONS ARE IN INCHES [mm].

DWG TITLE: SPP-250-LLPL

CAD FILE 022118 | SCALE N/A | SIZE A | 7361

CAGE CODE 53919

PASTERNACK® THE ENGINEER'S RF SOURCE
Pasternack Enterprises, Inc.
P.O. Box 16759 | Irvine | CA | 92623
Phone: (949) 261-1920 | **Fax:** (949) 261-7451
Website: www.pasternack.com | **E-Mail:** sales@pasternack.com

© 2018 Pasternack Enterprises All Rights Reserved