BNC Female Connector Clamp/Solder Attachment for RG213, RG214, RG8, RG9, RG11, RG225, RG393, RG144, RG216, RG215

RF Connectors Technical Data Sheet PE4212

Configuration

- BNC Female Connector
- MIL-STD-348
- 50 Ohms
- Straight Body Geometry
- RG213, RG214, RG8, RG9, RG11, RG225, RG393, RG144, RG216, RG215 Interface Type
- Clamp/Solder Attachment

Features

- Max. Operating Frequency 4 GHz
- Gold over Nickel Plated Brass Contact
- Contact plating according to MIL-G-45204

Applications

- General Purpose Test
- Custom Cable Assemblies

Description

Pasternack's PE4212 BNC female connector with clamp/solder attachment for RG213, RG214, RG8, RG9, RG11, RG225, RG393, RG144, RG216 and RG215 is part of our full line of RF components available for same-day shipping. Our BNC female connector operates up to a maximum frequency of 4 GHz.

Our BNC female connector PE4212 datasheet specifications and drawing with dimensions are shown below in this PDF. Pasternack's broad catalog of RF, microwave and millimeter wave connectors allows designers to configure and customize their signal connections however they like. Whether the need is to provide an I/O for a board design, or simply create a custom cable assembly configuration, Pasternack has the right connector for the job. Pasternack can also expertly build your custom cable assemblies for you and ship same-day.

Electrical Specifications

Description	Minimum	Typical	Maximum	Units
Frequency Range	DC		4	GHz
Operating Voltage (AC)			500	Vrms
Dielectric Withstanding Voltage (AC)			1,500	Vrms
Insulation Resistance	5,000			MOhms

Mechanical Specifications

Size	
Length	1.53 in [38.86 mm]
Width/Dia.	0.75 in [19.05 mm]
Weight	0.068 lbs [30.84 g]

Click the following link (or enter part number in "SEARCH" on website) to obtain additional part information including price, inventory and certifications: BNC Female Connector Clamp/Solder Attachment for RG213, RG214, RG8, RG9, RG11, RG225, RG393, RG144, RG216, RG215 PE4212

Pasternack Enterprises, Inc. • P.O. Box 16759, Irvine, CA 92623
Phone: (866) 727-8376 or (949) 261-1920 • **Fax:** (949) 261-7451
Sales@Pasternack.com • Techsupport@Pasternack.com

© 2016 Pasternack Enterprises All Rights Reserved

BNC Female Connector Clamp/Solder Attachment for RG213, RG214, RG8, RG9, RG11, RG225, RG393, RG144, RG216, RG215

Material Specifications

Description	Material	Plating
Contact	Brass	Gold over Nickel MIL-G-45204
Insulation	PTFE	
Body	Brass	Nickel QQ-N-290

Environmental Specifications

Temperature

Operating Range -65 to +165 deg C

Compliance Certifications (see product page for current document)

Plotted and Other Data

Notes:

BNC Female Connector Clamp/Solder Attachment for RG213, RG214, RG8, RG9, RG11, RG225, RG393, RG144, RG216, RG215 from Pasternack Enterprises has same day shipment for domestic and International orders. Our RF, microwave and millimeter wave products maintain a 99% availability and are part of the broadest selection in the industry.

Click the following link (or enter part number in "SEARCH" on website) to obtain additional part information including price, inventory and certifications: BNC Female Connector Clamp/Solder Attachment for RG213, RG214, RG8, RG9, RG11, RG225, RG393, RG144, RG216, RG215 PE4212

URL: https://www.pasternack.com/bnc-female-standard-rg213-rg214-rg8-rg9-rg11-rg225-rg393-connector-pe4212-p.aspx

The information contained in this document is accurate to the best of our knowledge and representative of the part described herein. It may be necessary to make modifications to the part and/or the documentation of the part, in order to implement improvements. Pasternack reserves the right to make such changes as required. Unless otherwise stated, all specifications are nominal. Pasternack does not make any representation or warranty regarding the suitability of the part described herein for any particular purpose, and Pasternack does not assume any liability arising out of the use of any part or documentation.

Pasternack Enterprises, Inc. • P.O. Box 16759, Irvine, CA 92623
Phone: (866) 727-8376 or (949) 261-1920 • **Fax:** (949) 261-7451
Sales@Pasternack.com • Techsupport@Pasternack.com

© 2016 Pasternack Enterprises All Rights Reserved

PE4212 CAD Drawing

BNC Female Connector Clamp/Solder Attachment for RG213, RG214, RG8, RG9, RG11, RG225, RG393, RG144, RG216, RG215

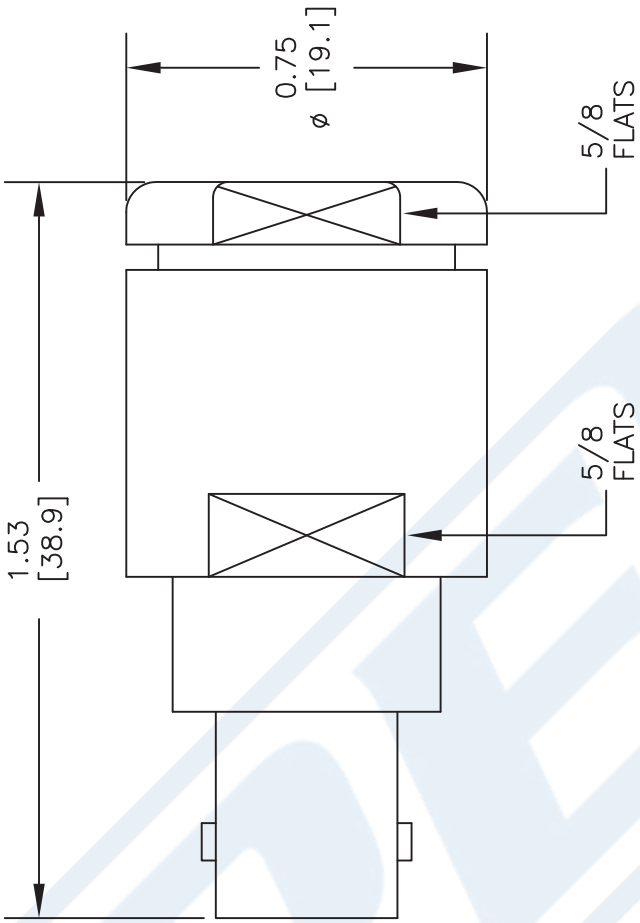

ASSEMBLY PROCEDURES

1. SLIDE CLAMP NUT (1) & GASKET (2) OVER CABLE. STRIP CABLE AS SHOWN. DO NOT NICK BRAID WHILE CUTTING JACKET. TAPER END OF BRAID TO PERMIT ASSEMBLY OF BRAID CLAMP (3). SLIDE BRAID CLAMP(3) OVER BRAID & SEAT AGAINST CABLE.

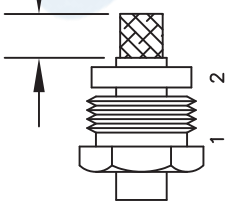

2. FORM BRAID OVER CLAMP NUT (3). TRIM BRAID BACK TO SHOULDER. CUT DIELECTRIC TO DIMENSION SHOWN. DO NOT NICK CENTER CONDUCTOR. SOLDER CONTACT TO CENTER CONDUCTOR. REMOVE EXCESS SOLDER. DO NOT OVER HEAT DIELECTRIC. INSERT CABLE ASSEMBLY INTO BODY & TIGHTEN.

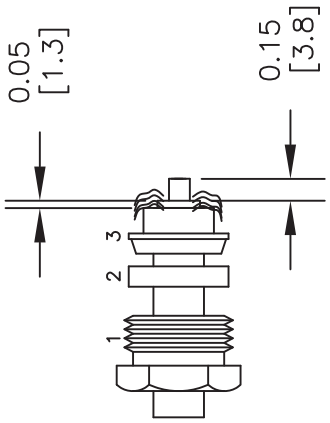

NOTES:
1. UNLESS OTHERWISE SPECIFIED ALL DIMENSIONS ARE NOMINAL.
2. ALL SPECIFICATIONS ARE SUBJECT TO CHANGE WITHOUT NOTICE AT ANY TIME.
3. DIMENSIONS ARE IN INCHES [mm].
4. FITS MIL-C-17 AND EQUIVALENT CABLES.

DWG TITLE
PE4212

FSCM NO. 53919

CAD FILE 082815 | SCALE N/A | SIZE A | 2233

PASTERNACK®
THE ENGINEER'S RF SOURCE
Pasternack Enterprises, Inc.
P.O. Box 16759 | Irvine | CA | 92623
Phone: (949) 261-1920 | **Fax:** (949) 261-7451
Website: www.pasternack.com | **E-Mail:** sales@pasternack.com

© 2016 Pasternack Enterprises All Rights Reserved

PASTERNACK
an INFINITE brand

QN Male Connector Crimp/Solder Attachment For RG213, RG215

RF Connectors
Technical Data Sheet

PE44597

Configuration

- QN Male Connector
- 50 Ohms
- Straight Body Geometry
- Connector Interface Types: RG213, RG215

Features

- Max. Operating Frequency 11 GHz
- Gold Plated Brass Contact

Applications

- General Purpose Test
- Custom Cable Assemblies

Description

Pasternack's PE44597 QN male connector with crimp/solder attachment for RG213 and RG215 is part of our full line of RF components available for same-day shipping. Our QN male connector operates up to a maximum frequency of 11 GHz.

Our QN male connector PE44597 datasheet specifications and drawing with dimensions are shown below in this PDF. Pasternack's broad catalog of RF, microwave and millimeter wave connectors allows designers to configure and customize their signal connections however they like. Whether the need is to provide an I/O for a board design, or simply create a custom cable assembly configuration, Pasternack has the right connector for the job. Pasternack can also expertly build your custom cable assemblies for you and ship same-day.

Electrical Specifications

Description	Minimum	Typical	Maximum	Units
Frequency Range	DC		11	GHz
Operating Voltage (AC)			1,000	Vrms
Dielectric Withstanding Voltage (AC)			2,500	Vrms

Performance by Frequency

Description	F1	F2	F3	F4	F5	Units
Frequency Range	DC to 2.5	2.5 to 4	4 to 6			GHz
VSWR, Max	1:1					
Return Loss, Max	27	25	20			dB
Insertion Loss, Max	0.08	0.1	0.12			dB
Input Power (CW), Max	300					Watts

Click the following link (or enter part number in "SEARCH" on website) to obtain additional part information including price, inventory and certifications: QN Male Connector Crimp/Solder Attachment For RG213, RG215 PE44597

Pasternack Enterprises, Inc. • P.O. Box 16759, Irvine, CA 92623
Phone: (866) 727-8376 or (949) 261-1920 • **Fax:** (949) 261-7451
Sales@Pasternack.com • Techsupport@Pasternack.com

© 2020 Pasternack Enterprises All Rights Reserved

QN Male Connector Crimp/Solder Attachment For RG213, RG215

Mechanical Specifications

Size

Length	1.73 in [43.94 mm]
Width/Dia.	0.75 in [19.05 mm]
Weight	0.068 lbs [30.84 g]
Mating Cycles	100 Cycles

Material Specifications

Description	Material	Plating
Contact	Brass	Gold
Insulation	PTFE	
Body	Brass	Tri-Metal

Environmental Specifications

Temperature

Operating Range	-40 to +125 deg C

Compliance Certifications (see product page for current document)

Plotted and Other Data

Notes:

QN Male Connector Crimp/Solder Attachment For RG213, RG215 from Pasternack Enterprises has same day shipment for domestic and International orders. Our RF, microwave and millimeter wave products maintain a 99.4% availability and are part of the broadest selection in the industry.

Click the following link (or enter part number in “SEARCH” on website) to obtain additional part information including price, inventory and certifications: QN Male Connector Crimp/Solder Attachment For RG213, RG215 PE44597

URL: https://www.pasternack.com/qn-male-standard-rg213-rg215-connector-pe44597-p.aspx

The information contained in this document is accurate to the best of our knowledge and representative of the part described herein. It may be necessary to make modifications to the part and/or the documentation of the part, in order to implement improvements. Pasternack reserves the right to make such changes as required. Unless otherwise stated, all specifications are nominal. Pasternack does not make any representation or warranty regarding the suitability of the part described herein for any particular purpose, and Pasternack does not assume any liability arising out of the use of any part or documentation.

Pasternack Enterprises, Inc. • P.O. Box 16759, Irvine, CA 92623
Phone: (866) 727-8376 or (949) 261-1920 • **Fax:** (949) 261-7451
Sales@Pasternack.com • Techsupport@Pasternack.com

© 2020 Pasternack Enterprises All Rights Reserved

PE44597 CAD Drawing

QN Male Connector Crimp/Solder Attachment For RG213, RG215

REVISIONS			
REV.	DESCRIPTION	DATE	APPROVED
A	PCR PE44597 20200812	10/12/2020	SRAUTUS

ASSEMBLY PROCEDURES

1. STRIP CABLE AS SHOWN. SLIDE FERRULE OVER CABLE.

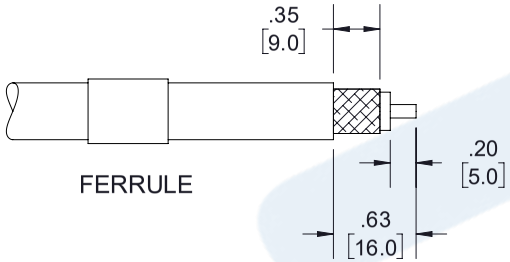

2. INSERT CENTER CONDUCTOR TO CONTACT AND SOLDER IT.

3. INSERT STRIPPED CABLE INTO BODY UNTIL CONTACT ENGAGES PERCEPTIBLY.

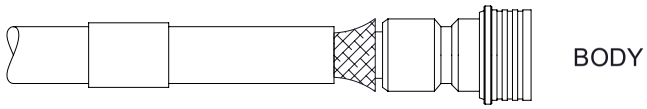

4. SLIDE FERRULE OVER BRAID UP TO THE CONNECTOR BODY AND CRIMP AS CLOSE TO THE CONNECTOR BODY AS POSSIBLE USING A .429" HEX CRIMP TOOL.

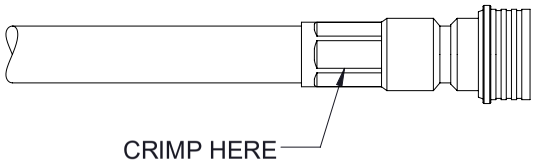

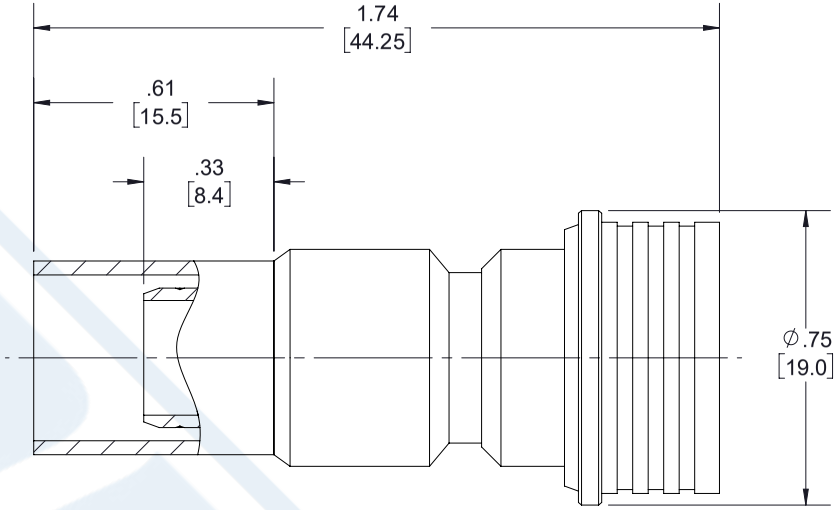

THESE COMMODITIES, TECHNOLOGY OR SOFTWARE WERE EXPORTED FROM THE UNITED STATES IN ACCORDANCE WITH THE EXPORT ADMINISTRATION REGULATIONS. DIVERSION CONTRARY TO U.S. LAW PROHIBITED.

UNLESS OTHERWISE SPECIFIED
LEADING DIMENSIONS ARE INCHES
DIMENSIONS IN [ ] ARE MILLIMETERS

TOLERANCES:

.X = ± .2	[5.08]	FRACTIONS
.XX = ± .02	[.51]	± 1/32
.XXX = ± .005	[.13]	ANGLES ± 1°

CABLE LENGTH (L) TOLERANCES:

L ≤ 12 [305] = +1 [25] / -0
12 [305] < L ≤ 60 [1524] = +2 [51] / -0
60 [1524] < L ≤ 120 [3048] = +4 [102] / -0
120 [3048] < L ≤ 300 [7620] = +6 [152] / -0
300 [7620] < L = +5%L / -0

ALL DIMENSIONS SHOWN ARE FOR REFERENCE ONLY.

PASTERNACK
an INFINITE brand

Pasternack Enterprises, Inc.
P.O.Box 16759, Irvine, CA 92623.
Phone: 1.949.261.1920 | 1.866.727.8376
Fax: 1.949.261.7451
Website: www.pasternack.com
E-mail: sales@pasternack.com

THIRD-ANGLE PROJECTION

THE INFORMATION AND DESIGN IN THIS DOCUMENT IS THE PROPERTY OF PASTERNACK CORPORATION ALL RIGHTS RESERVED.

SHEET 1 OF 1

SCALE N/A

SIZE	CAGE CODE	DRAWN BY	ITEM NO.	REV
A	53919	SLI	PE44597	A

© 2020 Pasternack Enterprises All Rights Reserved

PASTERNACK
an INFINITE brand

Flexible RG8 Coax Cable Single Shielded with Black PVC (NC) Jacket

RF Cables
Technical Data Sheet

RG8A/U

Times Microwave Systems Coax Cable Specification

Configuration

- Flexible Cable
- 1 Shield(s)

Electrical Specifications

Description	Minimum	Typical	Maximum	Units
Frequency Range	DC		1,000	MHz
Impedance		50		Ohms
Velocity of Propagation		66		%
Nominal Capacitance		30.8 [101.05]		pF/ft [pF/m]

Performance by Frequency Band

Description	F1	F2	F3	F4	F5	Units
Frequency	1	10	50	400	700	MHz
Attenuation, Typ	0.2	0.6	1.3	4.1	6.5	dB/100ft
	0.66	1.97	4.27	13.45	21.33	dB/100m

Description	F6	F7	F8	F9	F10	Units
Frequency	900	1,000				MHz
Attenuation, Typ	7.6	8				dB/100ft
	24.93	26.25				dB/100m

Mechanical Specifications

Diameter	0.405 in [10.29 mm]
Weight	0.105 lbs/ft [0.16 Kg/m]

Construction Specifications

Description	Material and Plating	Diameter
Inner Conductor	Copper, 7 Strands	0.085 in [2.16 mm]

Click the following link (or enter part number in “SEARCH” on website) to obtain additional part information including price, inventory and certifications: Flexible RG8 Coax Cable Single Shielded with Black PVC (NC) Jacket RG8A/U

Pasternack Enterprises, Inc. • P.O. Box 16759, Irvine, CA 92623
Phone: (866) 727-8376 or (949) 261-1920 • **Fax:** (949) 261-7451
Sales@Pasternack.com • Techsupport@Pasternack.com

© 2019 Pasternack Enterprises All Rights Reserved

Flexible RG8 Coax Cable Single Shielded with Black PVC (NC) Jacket

Conductor Type	Stranded	
Dielectric	PE	0.285 in [7.24 mm]
First Shield	Copper Braid	0.318 in [8.08 mm]
Jacket	PVC (NC), Black	0.405 in [10.29 mm]

Environmental Specifications

Temperature

Operating Range -40 to +80 deg C

Compliance Certifications (see product page for current document)

Plotted and Other Data

Notes:

Flexible RG8 Coax Cable Single Shielded with Black PVC (NC) Jacket from Pasternack Enterprises has same day shipment for domestic and International orders. Our RF, microwave and millimeter wave products maintain a 99.4% availability and are part of the broadest selection in the industry.

Click the following link (or enter part number in “SEARCH” on website) to obtain additional part information including price, inventory and certifications: Flexible RG8 Coax Cable Single Shielded with Black PVC (NC) Jacket RG8A/U

URL: https://www.pasternack.com/flexible-0.405-rg8-52-ohm-coax-cable-pvc-jacket-rg8a-u-p.aspx

The information contained in this document is accurate to the best of our knowledge and representative of the part described herein. It may be necessary to make modifications to the part and/or the documentation of the part, in order to implement improvements. Pasternack reserves the right to make such changes as required. Unless otherwise stated, all specifications are nominal. Pasternack does not make any representation or warranty regarding the suitability of the part described herein for any particular purpose, and Pasternack does not assume any liability arising out of the use of any part or documentation.

Pasternack Enterprises, Inc. • P.O. Box 16759, Irvine, CA 92623
Phone: (866) 727-8376 or (949) 261-1920 • **Fax:** (949) 261-7451
Sales@Pasternack.com • Techsupport@Pasternack.com

© 2019 Pasternack Enterprises All Rights Reserved

RG8A/U CAD Drawing

Flexible RG8 Coax Cable Single Shielded with Black PVC (NC) Jacket

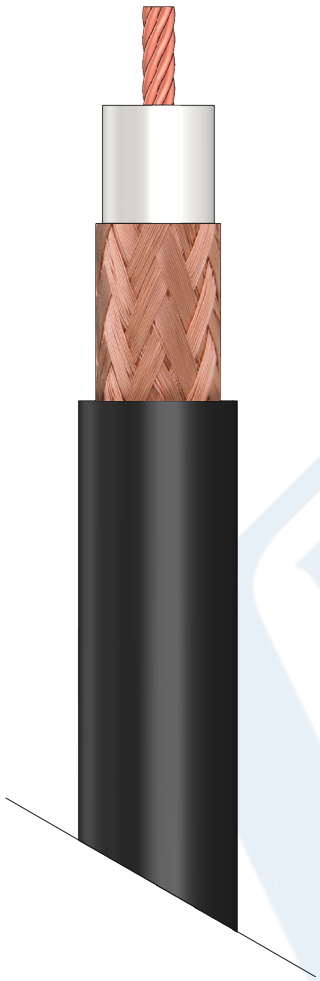

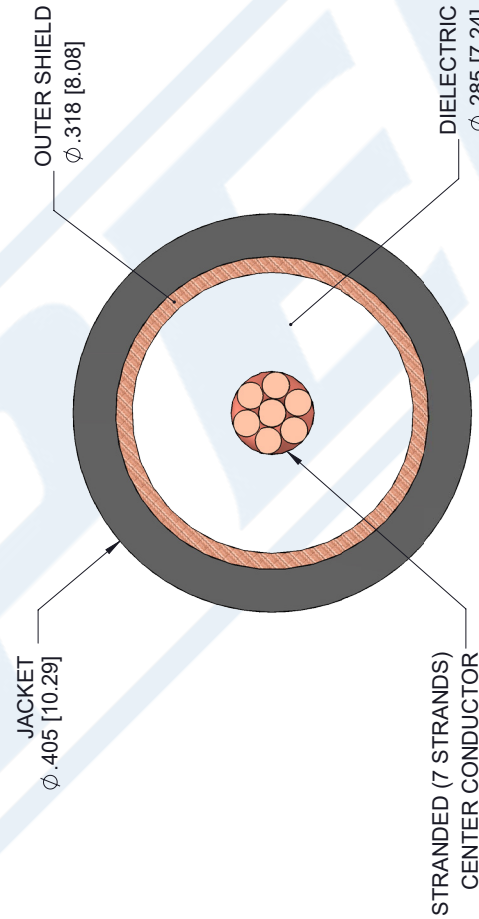

SECTION VIEW

STANDARD TOLERANCES	
.X	±0.2
.XX	±0.01
.XXX	±0.005

*STANDARD TOLERANCES APPLY ONLY TO DIMENSIONS IN INCHES

NOTES:
1. UNLESS OTHERWISE SPECIFIED ALL DIMENSIONS ARE NOMINAL.
2. ALL SPECIFICATIONS ARE SUBJECT TO CHANGE WITHOUT NOTICE AT ANY TIME.
3. DIMENSIONS ARE IN INCHES [mm].

DWG TITLE: RG8A/U

CAD FILE 12/21/18 | SCALE N/A | SIZE A | 7361

CAGE CODE 53919

PASTERNACK® THE ENGINEER'S RF SOURCE
Pasternack Enterprises, Inc.
P.O. Box 16759 | Irvine | CA | 92623
Phone: (949) 261-1920 | **Fax:** (949) 261-7451
Website: www.pasternack.com | **E-Mail:** sales@pasternack.com

© 2019 Pasternack Enterprises All Rights Reserved