# FAKRA Jack Connector Crimp/Solder Attachment for RG174, RG316, RG188, .100 inch, PE-B100, PE-C100, LMR-100, Black Color

RF Connectors Technical Data Sheet PE44646A

## Configuration

- FAKRA Jack Connector
- 50 Ohms
- Straight Body Geometry
- RG174, RG316, RG188, .100 inch, PE-B100, PE-C100, LMR-100 Interface Type
- Crimp/Solder Attachment

## Features

- Max. Operating Frequency 4 GHz
- Good VSWR of 1.3:1
- Gold Plated Phosphor Bronze Contact

## Applications

- General Purpose Test
- Custom Cable Assemblies

### Description

Pasternack's PE44646A FAKRA jack connector with crimp/solder attachment for RG174, RG316, RG188, .100 inch, PE-B100, PE-C100 and LMR-100 is part of our full line of RF components available for same-day shipping. Our FAKRA jack connector operates up to a maximum frequency of 4 GHz and offers good VSWR of 1.3:1.

Our FAKRA jack connector PE44646A datasheet specifications and drawing with dimensions are shown below in this PDF. Pasternack's broad catalog of RF, microwave and millimeter wave connectors allows designers to configure and customize their signal connections however they like. Whether the need is to provide an I/O for a board design, or simply create a custom cable assembly configuration, Pasternack has the right connector for the job. Pasternack can also expertly build your custom cable assemblies for you and ship same-day.

### Electrical Specifications

| Description | Minimum | Typical | Maximum | Units |
|---|---|---|---|---|
| Frequency Range | DC | | 4 | GHz |
| VSWR | | | 1.3:1 | |
| Operating Voltage (AC) | | | 335 | Vrms |
| Dielectric Withstanding Voltage (AC) | | | 1,000 | Vrms |
| Inner Conductor DC Resistance | | | 6 | mOhms |
| Outer Conductor DC Resistance | | | 2.5 | mOhms |
| Insulation Resistance | 1,000 | | | MOhms |

### Mechanical Specifications

| **Size** | |
|---|---|
| Length | 0.038 in [0.97 mm] |
| Width/Dia. | 0.37 in [9.40 mm] |
| Height | 0.54 in [13.72 mm] |
| Weight | 0.008 lbs [3.63 g] |

Click the following link (or enter part number in "SEARCH" on website) to obtain additional part information including price, inventory and certifications: FAKRA Jack Connector Crimp/Solder Attachment for RG174, RG316, RG188, .100 inch, PE-B100, PE-C100, LMR-100, Black Color PE44646A

Pasternack Enterprises, Inc. • P.O. Box 16759, Irvine, CA 92623
**Phone:** (866) 727-8376 or (949) 261-1920 • **Fax:** (949) 261-7451
Sales@Pasternack.com • Techsupport@Pasternack.com

© 2017 Pasternack Enterprises All Rights Reserved

# FAKRA Jack Connector Crimp/Solder Attachment for RG174, RG316, RG188, .100 inch, PE-B100, PE-C100, LMR-100, Black Color



**Material Specifications**

| Description | Material | Plating |
|---|---|---|
| Contact | Phosphor Bronze | Gold |
| Insulation | PTFE | |
| Outer Conductor | Brass | Nickel |
| Body | Plastic | |

## Environmental Specifications

**Temperature**

Operating Range -40 to +85 deg C

## Compliance Certifications (see product page for current document)

## Plotted and Other Data

Notes:

FAKRA Jack Connector Crimp/Solder Attachment for RG174, RG316, RG188, .100 inch, PE-B100, PE-C100, LMR-100, Black Color from Pasternack Enterprises has same day shipment for domestic and International orders. Our RF, microwave and millimeter wave products maintain a 99.4% availability and are part of the broadest selection in the industry.

Click the following link (or enter part number in "SEARCH" on website) to obtain additional part information including price, inventory and certifications: FAKRA Jack Connector Crimp/Solder Attachment for RG174, RG316, RG188, .100 inch, PE-B100, PE-C100, LMR-100, Black Color PE44646A

URL: https://www.pasternack.com/fakra-jack-standard-pe-c100-rg174-rg316-connector-pe44646a-p.aspx

The information contained in this document is accurate to the best of our knowledge and representative of the part described herein. It may be necessary to make modifications to the part and/or the documentation of the part, in order to implement improvements. Pasternack reserves the right to make such changes as required. Unless otherwise stated, all specifications are nominal. Pasternack does not make any representation or warranty regarding the suitability of the part described herein for any particular purpose, and Pasternack does not assume any liability arising out of the use of any part or documentation.

Pasternack Enterprises, Inc. • P.O. Box 16759, Irvine, CA 92623
**Phone:** (866) 727-8376 or (949) 261-1920 • **Fax:** (949) 261-7451
Sales@Pasternack.com • Techsupport@Pasternack.com

© 2017 Pasternack Enterprises All Rights Reserved

# PE44646A CAD Drawing

FAKRA Jack Connector Crimp/Solder Attachment for RG174, RG316, RG188, .100 inch, PE-B100, PE-C100, LMR-100, Black Color

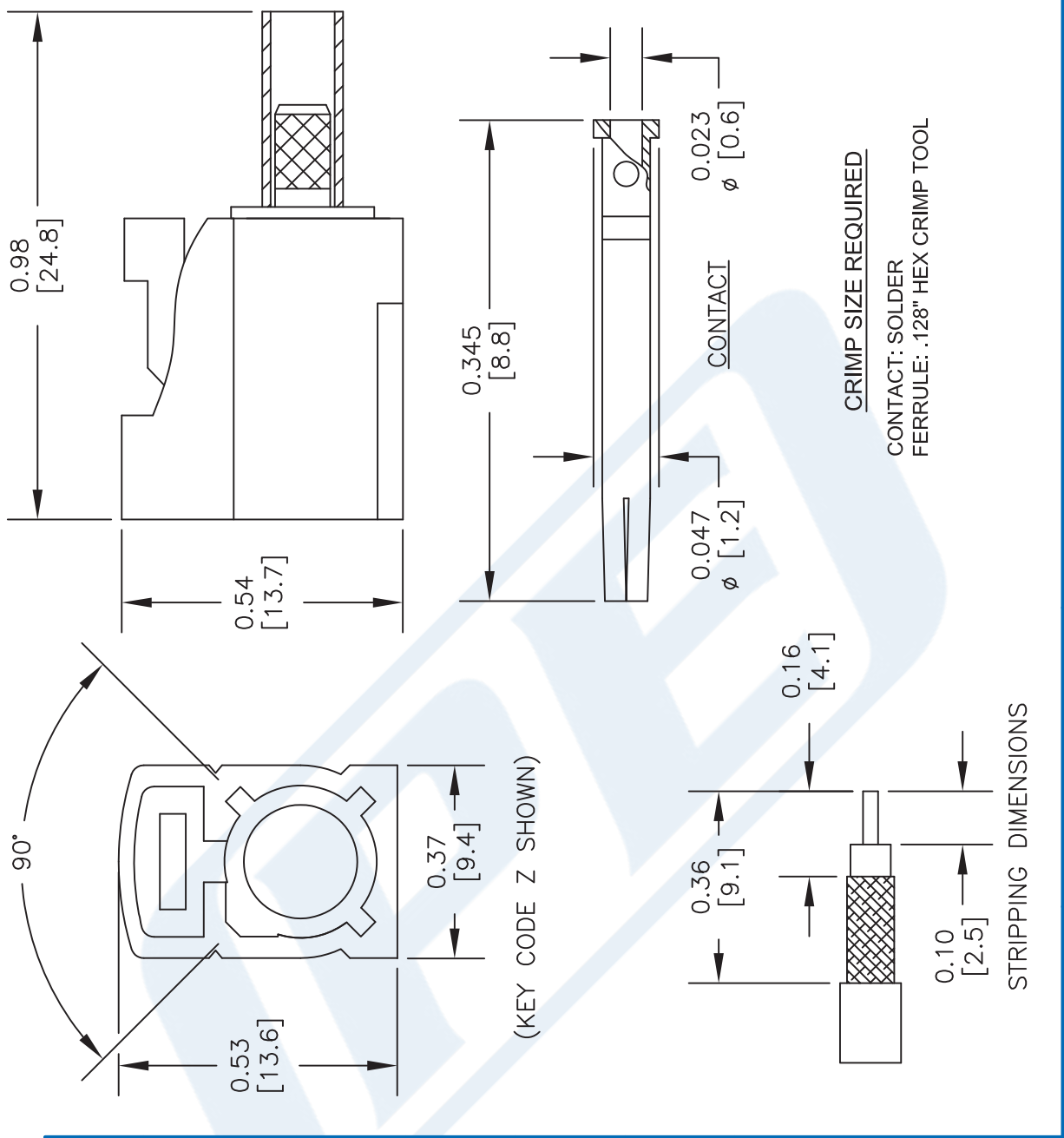


NOTES:
1. UNLESS OTHERWISE SPECIFIED ALL DIMENSIONS ARE NOMINAL.
2. ALL SPECIFICATIONS ARE SUBJECT TO CHANGE WITHOUT NOTICE AT ANY TIME.
3. DIMENSIONS ARE IN INCHES [mm].

DWG TITLE **PE44646/Y**

CAGE CODE 53919

CAD FILE 041017 | SCALE N/A | SIZE A | 2233

## Part Configurator

1. Replace Y with code.

| CODING | JACK | COLOR | APPLICATION |
|---|---|---|---|
| A | | BLACK | RADIO WITH PHANTOM SUPPLY |
| B | | WHITE | RADIO WITHOUT PHANTOM SUPPLY |
| C | | BLUE | GPS: TELEMATICS OR NAVIGATION |
| D | | BORDEAUX | GSM: CELLULAR PHONE |
| H | | VIOLET | GPS: TELEMATICS AND NAVIGATION |
| I | | BEIGE | BLUETOOTH |
| K | | CURRY | RADIO WITH IF OUTPUT (ANTENNA DIVERSITY) |
| Z | | WATER BLUE | NEUTRAL CODING |


PASTERNACK® THE ENGINEER'S RF SOURCE
Pasternack Enterprises, Inc.
P.O. Box 16759 | Irvine | CA | 92623
**Phone:** (949) 261-1920 | **Fax:** (949) 261-7451
**Website:** www.pasternack.com | **E-Mail:** sales@pasternack.com


© 2017 Pasternack Enterprises All Rights Reserved

PASTERNACK®
www.pasternack.com

# Mini UHF Male Connector Crimp/Solder Attachment For RG174, RG316, RG188

TECHNICAL DATA SHEET PE44090

**Mini UHF Male Connector Crimp/Solder Attachment For RG174, RG316, RG188**

## Configuration

| | |
|---|---|
| Connector | Mini UHF Male |
| Connector Interface Type | RG174,RG316,RG188 |
| Cable Attachment Method (Shield/Contact) | Crimp/Solder |
| Body Style | Straight |

## Electrical Specifications

| | |
|---|---|
| Impedance, Ohms | 50 |

## Mechanical Specifications

**Size**

| | |
|---|---|
| Length, in [mm] | 1.09 [27.69] |
| Width/Dia., in [mm] | 0.452 [11.48] |
| Weight, lbs [g] | 0.013 [5.9] |

**Connector**

| | |
|---|---|
| Type | Mini UHF Male |
| Contact Material and Plating | Gold |
| Body Material and Plating | Brass, Nickel |
| Dielectric Type | PTFE |

## Compliance Certifications (visit www.Pasternack.com for current document)

| | |
|---|---|
| RoHS Compliant | Yes |

## Plotted and Other Data

| | |
|---|---|
| Notes: | Values at 25 °C, sea level |

Mini UHF Male Connector Crimp/Solder Attachment For RG174, RG316, RG188 from Pasternack Enterprises has same day shipment for domestic and International orders. Our RF, microwave and fiber optic products maintain a 99% availability and are part of the broadest selection in the industry.

Click the following link (or enter part number in “SEARCH” on website) to obtain additional part information including price, inventory and certifications: Mini UHF Male Connector Crimp/Solder Attachment For RG174, RG316, RG188 PE44090

URL: http://www.pasternack.com/mini-uhf-male-standard-rg174-rg316-rg188-connector-pe44090-p.aspx

The information contained in this document is accurate to the best of our knowledge and representative of the part described herein. It may be necessary to make modifications to the part and/or the documentation of the part, in order to implement improvements. Pasternack reserves the right to make such changes as required. Unless otherwise stated, all specifications are nominal.

Pasternack Enterprises, Inc. • P.O. Box 16759, Irvine, CA 92623
**Phone:** (866) 727-8376 or (949) 261-1920 • **Fax:** (949) 261-7451
Sales@Pasternack.com • Techsupport@Pasternack.com

© 2013 Pasternack Enterprises All Rights Reserved

# PE44090 CAD Drawing

Mini UHF Male Connector Crimp/Solder Attachment For RG174, RG316, RG188

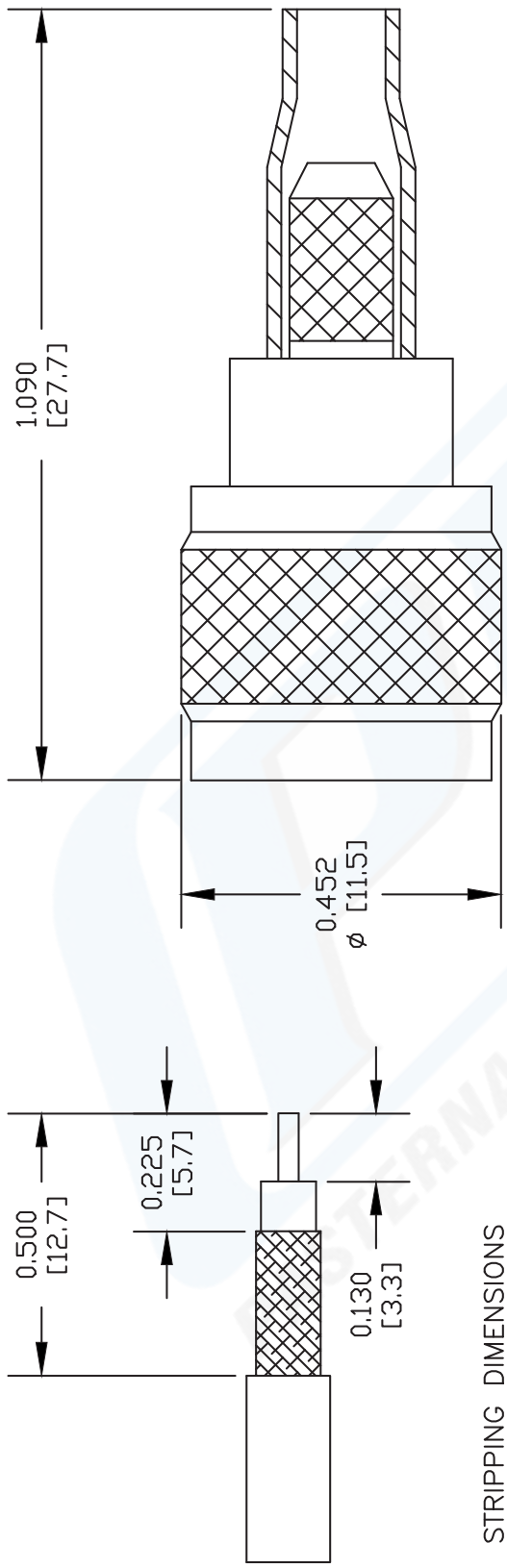


STRIPPING DIMENSIONS

CRIMP SIZE REQUIRED

CONTACT: .068" HEX CRIMP TOOL
FERRULE: .178" HEX CRIMP TOOL

NOTES:
1. UNLESS OTHERWISE SPECIFIED ALL DIMENSIONS ARE NOMINAL.
2. ALL SPECIFICATIONS ARE SUBJECT TO CHANGE WITHOUT NOTICE AT ANY TIME.
3. DIMENSIONS ARE IN INCHES [mm].
4. FITS MIL-C-17 AND EQUIVALENT CABLES.

DWG TITLE
PE44090

FSCM NO. 53919

CAD FILE 062502 | SCALE N/A | SIZE A | 127

PASTERNACK®
Pasternack Enterprises, Inc.
P.O. Box 16759 | Irvine | CA | 92623
**Phone:** (949) 261-1920 | **Fax:** (949) 261-7451
**Website:** www.pasternack.com | **E-Mail:** sales@pasternack.com

© 2013 Pasternack Enterprises All Rights Reserved

TIMES MICROWAVE SYSTEMS

# LMR®-100A
# Flexible Low Loss Communications Coax

## Ideal for...

- Drop-in Replacement for RG-316/RG-174 (uses standard connectors)
- Jumper Assemblies in Wireless Communications Systems
- Short Antenna Feeder runs
- Any application (e.g. WLL, GPS, LMR, WLAN, WISP, WiMax, SCADA, Mobile Antennas) requiring an easily routed, low loss RF cable

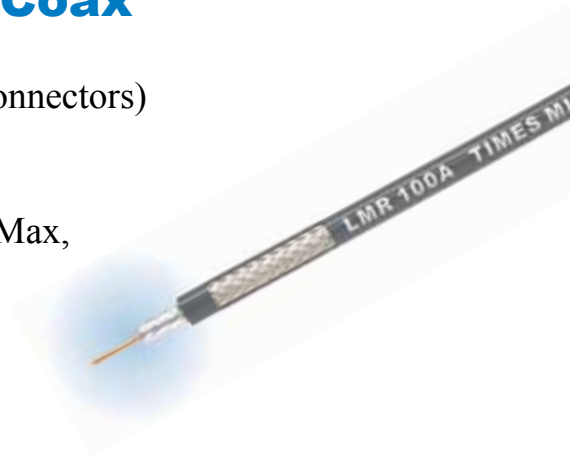


- **LMR®- PVC** is designed for low loss general-purpose indoor/outdoor applications and is somewhat more flexible than the standard polyethylene jacketed LMR.
- **LMR®- PVC-W** is a white-jacketed version of LMR-PVC for marine and other indoor/outdoor applications where color compatibility is desired.
- **Flexibility** and bendability are hallmarks of the LMR-100A cable design. The flexible outer conductor enables the tightest bend radius available for any cable of similar size and performance.
- **Low Loss** is another hallmark feature of LMR-100A. Size for size LMR has the lowest loss of any flexible cable and comparable loss to semirigid hard-line cables.
- **RF Shielding** is 50 dB greater than typical single shielded coax (40 dB). The multi-ply bonded foil outer conductor is rated conservatively at > 90 dB (i.e. >180 dB between two adjacent cables).
- **Weatherability**: LMR-100A cables designed for outdoor exposure incorporate the best materials for UV resistance and have life expectancy in excess of 20 years.
- **Connectors**: A wide variety of connectors are available for LMR-100A cable, including all common interface types, reverse polarity, and a choice of solder or non-solder center pins. Most LMR connectors employ crimp outer attachment using standard hex crimp sizes.
- **Cable Assemblies**: All LMR-100A cable types are available as pre-terminated cable assemblies. Refer to the section on FlexTech for further details.

**Construction Specifications**

| Description | Material | In. | (mm) |
|---|---|---|---|
| Inner Conductor | Solid BCCS | 0.018 | (0.46) |
| Dielectric | Solid PE | 0.060 | (1.52) |
| Outer Conductor | Aluminum Tape | 0.065 | (1.65) |
| Overall Braid | Tinned Copper | 0.083 | (2.11) |
| Jacket | (see table above) | 0.110 | (2.79) |

**Mechanical Specifications**

| Performance Property | Units | US | (metric) |
|---|---|---|---|
| Bend Radius: installation | in. (mm) | 0.25 | (6.4) |
| Bend Radius: repeated | in. (mm) | 1 | (25.4) |
| Bending Moment | ft-lb (N-m) | 0.1 | (0.014) |
| Weight | lb/ft (kg/m) | 0.0092 | (.014) |
| Tensile Strength | lb (kg) | 15 | (6.8) |
| Flat Plate Crush | lb/in. (kg/mm) | 10 | (0.18) |

**Environmental Specifications**

| Performance Property | °F | °C |
|---|---|---|
| Installation Temperature Range | -40/+185 | -40/+85 |
| Storage Temperature Range | -94/+185 | -70/+85 |
| Operating Temperature Range | -40/+185 | -40/+85 |

**Electrical Specifications**

| Performance Property | Units | US | (metric) |
|---|---|---|---|
| Velocity of Propagation | % | 66 | |
| Dielectric Constant | NA | 2.30 | |
| Time Delay | nS/ft (nS/m) | 1.54 | (5.05) |
| Impedance | ohms | 50 | |
| Capacitance | pF/ft (pF/m) | 30.8 | (101.1) |
| Inductance | uH/ft (uH/m) | 0.077 | (0.25) |
| Shielding Effectiveness | dB | >90 | |
| DC Resistance | | | |
| Inner Conductor | ohms/1000ft (/km) | 81.0 | (266) |
| Outer Conductor | ohms/1000ft (/km) | 9.5 | (31.2) |
| Voltage Withstand | Volts DC | 500 | |
| Jacket Spark | Volts RMS | 2000 | |
| Peak Power | kW | 0.6 | |

**Part Description**

| Part Number | Application | Jacket | Color | Stock Code |
|---|---|---|---|---|
| LMR-100A-FR | Indoor/Outdoor Riser CMR | FRPE | Black | 54037 |
| LMR-100A-PVC | Indoor/Outdoor | PVC | Black | 54119 |
| LMR-100A-PVC-W | Indoor/Outdoor | PVC | White | 54200 |

PVC = Poly Vinyl Chloride; MTO = Made to Order

## Attenuation vs. Frequency (typical)

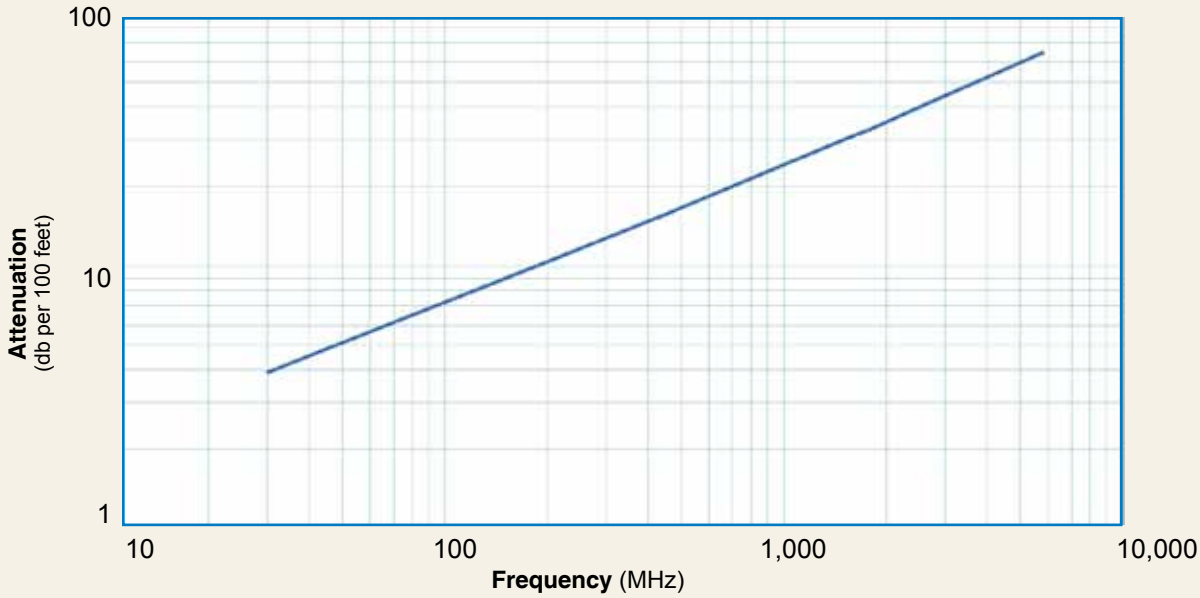


| Frequency (MHz) | 30 | 50 | 150 | 220 | 450 | 900 | 1500 | 1800 | 2000 | 2500 | 5800 |
|---|---|---|---|---|---|---|---|---|---|---|---|
| **Attenuation dB/100 ft** | 3.9 | 5.1 | 8.9 | 10.9 | 15.8 | 22.8 | 30.1 | 33.2 | 35.2 | 39.8 | 64.1 |
| **Attenuation dB/100 m** | 12.9 | 16.7 | 29.4 | 35.8 | 51.9 | 74.9 | 98.7 | 109.0 | 115.5 | 130.6 | 210.3 |
| **Avg. Power kW** | 0.230 | 0.180 | 0.100 | 0.083 | 0.057 | 0.039 | 0.029 | 0.027 | 0.025 | 0.022 | 0.013 |

**Calculate Attenuation** = (0.709140) • $\sqrt{\text{FMHz}}$ + (0.001740) • FMHz (interactive calculator available at http://www.timesmicrowave/telecom)
**Attenuation:** VSWR=1.0 ; Ambient = +25°C (77°F) **Power:** VSWR=1.0; Ambient = +40°C; Inner Conductor = 100°C (212°F);
Sea Level; dry air; atmospheric pressure; no solar loading

TC-100-SM

TC-100-TM

# Connectors

| Interface | Description | Part Number | Stock Code | VSWR ** Freq. | (GHz) | Coupling Nut | Inner Contact Attach | Outer Contact Attach | Finish* Body /Pin | Length in | (mm) | Width in | (mm) | Weight lb | (g) |
|---|---|---|---|---|---|---|---|---|---|---|---|---|---|---|---|
| SMA male | Straight Plug | TC-100-SM | 3190-1551 | <1.25:1 | (<3 ) | Hex | Solder | Crimp | SS/G | 1.0 | (25.4) | 0.32 | (8.1) | 0.015 | (6.8) |
| TNC male | Straight Plug | TC-100-TM | 3190-1552 | <1.25:1 | (<3 ) | Knurl | Solder | Crimp | S/G | 1.4 | (35.6) | 0.59 | (15.0) | 0.045 | (20.4) |

* Finish metals: N=Nickel, S=Silver, G=Gold, SS=Stainless Steel, A=Alballoy **VSWR spec based on 3 foot cable with a connector pair

CT-240/200/195/100

# Install Tools

| Type | Part Number | Stock Code | Description |
|---|---|---|---|
| Crimp Tool | CT-240/200/195/100 | 3190-667 | Crimp tool for LMR-100, 195, 200 and 240 connectors |
| Cutting Tool | CCT-01 | 3190-1544 | Cable end flush cut tool |
| Replacement Blade | RB-01 | 3190-1609 | Replacement blade for cutting tool |

CCT-01