PASTERNACK
an INFINITE brand

HN Male Connector Clamp/Solder Attachment for RG58, RG55, RG141, RG142, RG223, RG400, RG303, PE-C195, PE-P195, LMR-195

RF Connectors
Technical Data Sheet

PE4198

Configuration

- HN Male Connector
- MIL-STD-348A
- 50 Ohms
- Straight Body Geometry
- Connector Interface Types: RG58, RG55, RG141, RG142, RG223, RG400, RG303, PE-C195, PE-P195, LMR-195

Features

- Max. Operating Frequency 3 GHz
- Good VSWR of 1.35:1
- Gold Plated Brass Contact
- 30 µin minimum contact plating

Applications

- General Purpose Test
- Custom Cable Assemblies

Description

Pasternack's PE4198 HN male connector with clamp/solder attachment for RG58, RG55, RG141, RG142, RG223, RG400, RG303, PE-C195, PE-P195 and LMR-195 is part of our full line of RF components available for same-day shipping. Our HN male connector operates up to a maximum frequency of 3 GHz and offers good VSWR of 1.35:1.

Our HN male connector PE4198 datasheet specifications and drawing with dimensions are shown below in this PDF. Pasternack's broad catalog of RF, microwave and millimeter wave connectors allows designers to configure and customize their signal connections however they like. Whether the need is to provide an I/O for a board design, or simply create a custom cable assembly configuration, Pasternack has the right connector for the job. Pasternack can also expertly build your custom cable assemblies for you and ship same-day.

Electrical Specifications

Description	Minimum	Typical	Maximum	Units
Frequency Range	DC		3	GHz
VSWR			1.35:1	
Operating Voltage (AC)			1,400	Vrms

Mechanical Specifications

Size

Length	1.407 in [35.74 mm]
Width/Dia.	0.866 in [22.00 mm]
Weight	0.097 lbs [44 g]

Click the following link (or enter part number in "SEARCH" on website) to obtain additional part information including price, inventory and certifications: HN Male Connector Clamp/Solder Attachment for RG58, RG55, RG141, RG142, RG223, RG400, RG303, PE-C195, PE-P195, LMR-195 PE4198

Pasternack Enterprises, Inc. • P.O. Box 16759, Irvine, CA 92623
Phone: (866) 727-8376 or (949) 261-1920 • **Fax:** (949) 261-7451
Sales@Pasternack.com • Techsupport@Pasternack.com

© 2019 Pasternack Enterprises All Rights Reserved

HN Male Connector Clamp/Solder Attachment for RG58, RG55, RG141, RG142, RG223, RG400, RG303, PE-C195, PE-P195, LMR-195

Material Specifications

Description	Material	Plating
Contact	Brass	Gold 30 µin minimum
Insulation	PTFE	
Body	Brass	Nickel 100 µin minimum
Coupling Nut	Brass	Nickel 100 µin minimum

Mechanical Specification Notes:
When attaching the connector to the cable use a clamp torque value of 26 to 30 in-lbs [2.94 to 3.39 Nm]

Environmental Specifications

Temperature

Operating Range -65 to +165 deg C

Compliance Certifications (see product page for current document)

Plotted and Other Data

Notes:

HN Male Connector Clamp/Solder Attachment for RG58, RG55, RG141, RG142, RG223, RG400, RG303, PE-C195, PE-P195, LMR-195 from Pasternack Enterprises has same day shipment for domestic and International orders. Our RF, microwave and millimeter wave products maintain a 99.4% availability and are part of the broadest selection in the industry.

Click the following link (or enter part number in “SEARCH” on website) to obtain additional part information including price, inventory and certifications: HN Male Connector Clamp/Solder Attachment for RG58, RG55, RG141, RG142, RG223, RG400, RG303, PE-C195, PE-P195, LMR-195 PE4198

URL: https://www.pasternack.com/hn-male-standard-rg58-rg55-rg141-rg142-rg223-rg400-connector-pe4198-p.aspx

The information contained in this document is accurate to the best of our knowledge and representative of the part described herein. It may be necessary to make modifications to the part and/or the documentation of the part, in order to implement improvements. Pasternack reserves the right to make such changes as required. Unless otherwise stated, all specifications are nominal. Pasternack does not make any representation or warranty regarding the suitability of the part described herein for any particular purpose, and Pasternack does not assume any liability arising out of the use of any part or documentation.

Pasternack Enterprises, Inc. • P.O. Box 16759, Irvine, CA 92623
Phone: (866) 727-8376 or (949) 261-1920 • **Fax:** (949) 261-7451
Sales@Pasternack.com • Techsupport@Pasternack.com

© 2019 Pasternack Enterprises All Rights Reserved

PE4198 CAD Drawing

HN Male Connector Clamp/Solder Attachment for RG58, RG55, RG141, RG142, RG223, RG400, RG303, PE-C195, PE-P195, LMR-195

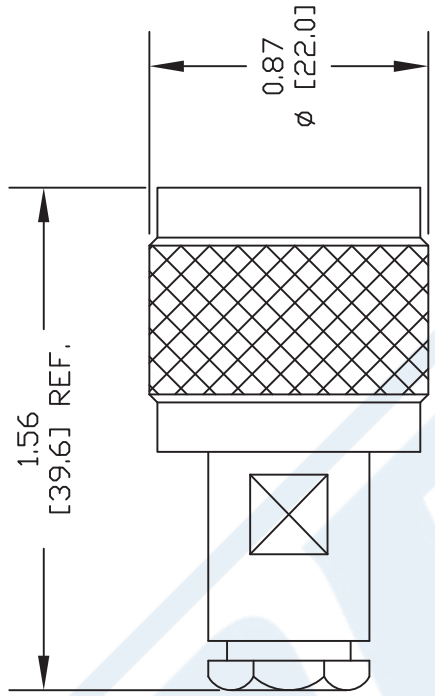

ASSEMBLY PROCEDURES

1. SLIDE CLAMP NUT (1) & GASKET (2) OVER CABLE. DO NOT NICK BRAID WHILE CUTTING JACKET. TAPER END OF BRAID TO PERMIT ASSEMBLY OF BRAID CLAMP (3) SLIDE BRAID CLAMP(3) OVER BRAID & SEAT AGAINST CABLE.

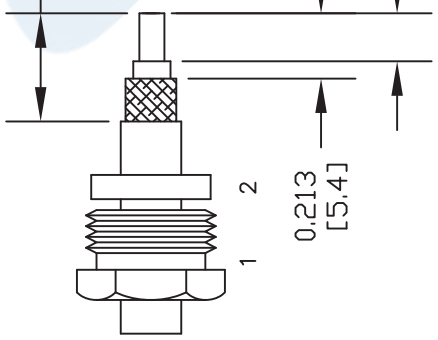

2. FORM BRAID OVER CLAMP NUT (3). TRIM BRAID BACK TO SHOULDER. SOLDER CONTACT TO CENTER CONDUCTOR. REMOVE EXCESS SOLDER. DO NOT OVER HEAT DIELECTRIC. INSERT CABLE ASSEMBLY INTO BODY & TIGHTEN.

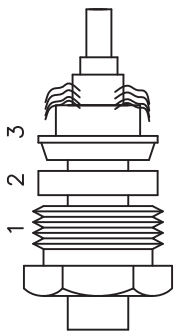

NOTES:
1. UNLESS OTHERWISE SPECIFIED ALL DIMENSIONS ARE NOMINAL.
2. ALL SPECIFICATIONS ARE SUBJECT TO CHANGE WITHOUT NOTICE AT ANY TIME.
3. DIMENSIONS ARE IN INCHES [mm].
4. FITS MIL-C-17 AND EQUIVALENT CABLES.

DWG TITLE **PE4198**

REV. B	FSCM NO. 53919	CAD FILE 072512	SCALE N/A	SIZE A	2231

PASTERNACK®
Pasternack Enterprises, Inc.
P.O. Box 16759 | Irvine | CA | 92623
Phone: (949) 261-1920 | **Fax:** (949) 261-7451
Website: www.pasternack.com | **E-Mail:** sales@pasternack.com

© 2019 Pasternack Enterprises All Rights Reserved

PASTERNACK®
THE ENGINEER'S RF SOURCE

N Male Connector Crimp/Crimp Attachment for RG55, RG141, RG142, RG223, RG400

Configuration

- N Male Connector
- MIL-STD-348
- 50 Ohms
- Straight Body Geometry
- RG55, RG141, RG142, RG223, RG400 Interface Type
- Crimp/Crimp Attachment

Features

- Max. Operating Frequency 12.4 GHz
- Silver Plated Brass Contact
- Contact plating according to ASTM-B700

Applications

- General Purpose Test
- Custom Cable Assemblies

Description

Pasternack's PE4042 type N male connector with crimp/crimp attachment for RG55, RG141, RG142, RG223 and RG400 is part of our full line of RF components available for same-day shipping. Our type N male connector operates up to a maximum frequency of 12.4 GHz.

Our type N male connector PE4042 datasheet specifications and drawing with dimensions are shown below in this PDF. Pasternack's broad catalog of RF, microwave and millimeter wave connectors allows designers to configure and customize their signal connections however they like. Whether the need is to provide an I/O for a board design, or simply create a custom cable assembly configuration, Pasternack has the right connector for the job. Pasternack can also expertly build your custom cable assemblies for you and ship same-day.

Electrical Specifications

Description	Minimum	Typical	Maximum	Units
Frequency Range	DC		12.4	GHz
Dielectric Withstanding Voltage (AC)			700	Vrms

Mechanical Specifications

Size

Length	1.43 in [36.32 mm]
Width/Dia.	0.812 in [20.62 mm]
Weight	0.072 lbs [32.66 g]

Click the following link (or enter part number in "SEARCH" on website) to obtain additional part information including price, inventory and certifications: N Male Connector Crimp/Crimp Attachment for RG55, RG141, RG142, RG223, RG400 PE4042

Pasternack Enterprises, Inc. • P.O. Box 16759, Irvine, CA 92623
Phone: (866) 727-8376 or (949) 261-1920 • **Fax:** (949) 261-7451
Sales@Pasternack.com • Techsupport@Pasternack.com

© 2016 Pasternack Enterprises All Rights Reserved

N Male Connector Crimp/Crimp Attachment for RG55, RG141, RG142, RG223, RG400

Material Specifications

Description	Material	Plating
Contact	Brass	Silver ASTM-B700
Insulation	PTFE	
Body	Brass	Nickel ASTM-B689
Coupling Nut	Brass	Nickel ASTM-B689

Environmental Specifications

Temperature

Operating Range -65 to +165 deg C

Compliance Certifications (see product page for current document)

Plotted and Other Data

Notes:

N Male Connector Crimp/Crimp Attachment for RG55, RG141, RG142, RG223, RG400 from Pasternack Enterprises has same day shipment for domestic and International orders. Our RF, microwave and millimeter wave products maintain a 99% availability and are part of the broadest selection in the industry.

Click the following link (or enter part number in "SEARCH" on website) to obtain additional part information including price, inventory and certifications: N Male Connector Crimp/Crimp Attachment for RG55, RG141, RG142, RG223, RG400 PE4042

URL: https://www.pasternack.com/n-male-standard-rg55-rg141-rg142-rg223-rg400-connector-pe4042-p.aspx

The information contained in this document is accurate to the best of our knowledge and representative of the part described herein. It may be necessary to make modifications to the part and/or the documentation of the part, in order to implement improvements. Pasternack reserves the right to make such changes as required. Unless otherwise stated, all specifications are nominal. Pasternack does not make any representation or warranty regarding the suitability of the part described herein for any particular purpose, and Pasternack does not assume any liability arising out of the use of any part or documentation.

Pasternack Enterprises, Inc. • P.O. Box 16759, Irvine, CA 92623
Phone: (866) 727-8376 or (949) 261-1920 • **Fax:** (949) 261-7451
Sales@Pasternack.com • Techsupport@Pasternack.com

© 2016 Pasternack Enterprises All Rights Reserved

PE4042 CAD Drawing

N Male Connector Crimp/Crimp Attachment for RG55, RG141, RG142, RG223, RG400

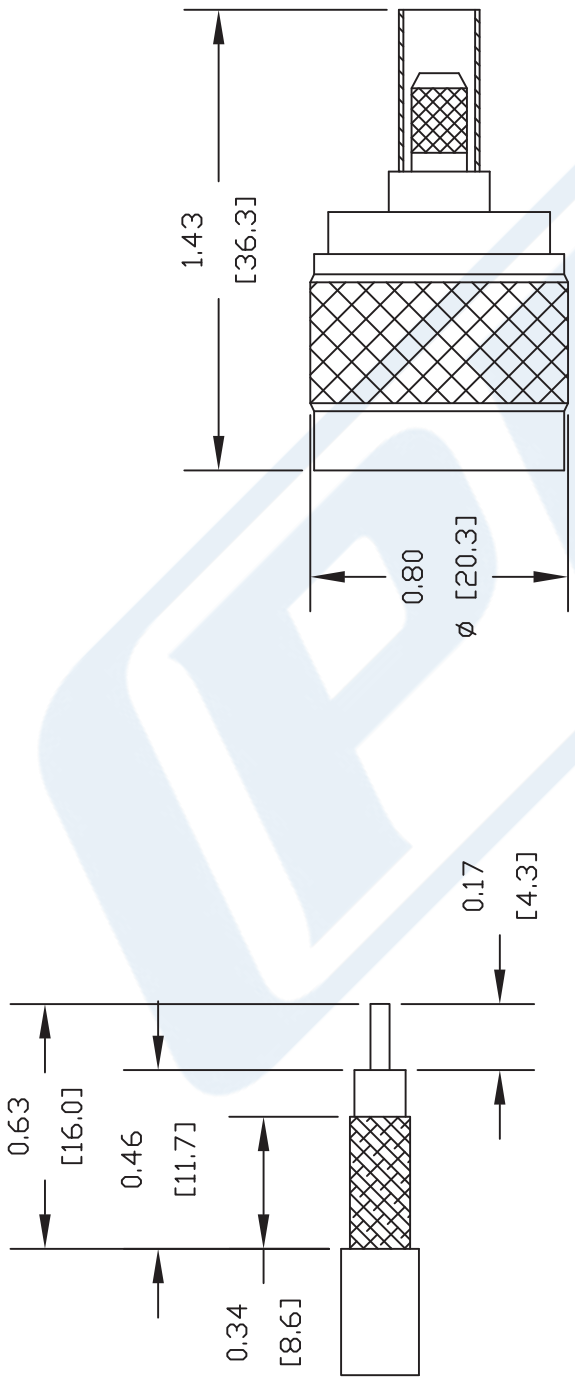

STRIPPING DIMENSIONS

CRIMP SIZES REQUIRED

CONTACT: .068" HEX CRIMP TOOL
FERRULE: .213" HEX CRIMP TOOL

NOTES:
1. UNLESS OTHERWISE SPECIFIED ALL DIMENSIONS ARE NOMINAL.
2. ALL SPECIFICATIONS ARE SUBJECT TO CHANGE WITHOUT NOTICE AT ANY TIME.
3. DIMENSIONS ARE IN INCHES [mm].
4. FITS MIL-C-17 AND EQUIVALENT CABLES.

DWG TITLE
PE4042

REV. A	FSCM NO. 53919	CAD FILE 051310	SCALE N/A	SIZE A	127

PASTERNACK®
Pasternack Enterprises, Inc.
P.O. Box 16759 | Irvine | CA | 92623
Phone: (949) 261-1920 | **Fax:** (949) 261-7451
Website: www.pasternack.com | **E-Mail:** sales@pasternack.com

© 2016 Pasternack Enterprises All Rights Reserved

PASTERNACK®
THE ENGINEER'S RF SOURCE

Flexible RG223 Coax Cable Double Shielded with Black PVC Jacket

TECHNICAL DATA SHEET RG223/U

Configuration

Inner Conductor Material and Plating	Copper, Silver
Dielectric Type	PE
Shield Materials	Silver Plated Copper Braid, Silver Plated Copper Braid
Jacket Material and Color	PVC, Black

Electrical Specifications

Impedance, Ohms	50
Velocity of Propagation, %	66
Maximum Operating Frequency, GHz	12.4
Capacitance, pF/ft [pF/m]	30.8 [101.05]
Maximum Operating Voltage, Volts	1,900

Electrical Specifications by Frequency

Frequency 1	
Frequency, MHz	100
Attenuation, dB/100ft [dB/100m]	4 [13.12]
Frequency 2	
Frequency, MHz	400
Attenuation, dB/100ft [dB/100m]	8.2 [26.9]
Frequency 3	
Frequency, MHz	1000
Attenuation, dB/100ft [dB/100m]	13.4 [43.96]
Frequency 4	
Frequency, GHz	3
Attenuation, dB/100ft [dB/100m]	24.8 [81.36]
Frequency 5	
Frequency, GHz	5
Attenuation, dB/100ft [dB/100m]	33.5 [109.91]
Frequency 6	
Frequency, GHz	11
Attenuation, dB/100ft [dB/100m]	54.1 [177.49]

Mechanical Specifications

Temperature	
Operating Range, deg C	-20 to +80

Click the following link (or enter part number in "SEARCH" on website) to obtain additional part information including price, inventory and certifications: Flexible RG223 Coax Cable Double Shielded with Black PVC Jacket RG223/U

Pasternack Enterprises, Inc. • P.O. Box 16759, Irvine, CA 92623
Phone: (866) 727-8376 or (949) 261-1920 • **Fax:** (949) 261-7451
Sales@Pasternack.com • Techsupport@Pasternack.com

© 2014 Pasternack Enterprises All Rights Reserved

Flexible RG223 Coax Cable Double Shielded with Black PVC Jacket

TECHNICAL DATA SHEET RG223/U

Inner Conductor	
Number of Strands	1
Material	Copper
Plating	Silver
Diameter, in [mm]	0.035 [0.89]
Dielectric:	
Type	PE
Diameter, in [mm]	0.116 [2.95]
Shield:	
Number of	2
Material 1	Silver Plated Copper Braid
Material 2	Silver Plated Copper Braid
Diameter, in [mm]	0.156 [3.96]
Jacket:	
Material	PVC
Diameter, in [mm]	0.21 [5.33]
Color	Black
One Time Minimum Bend Radius, in [mm]	0.21 [5.33]
Repeated Minimum Bend Radius, in [mm]	1 [25.4]
Weight, lbs/ft [Kg/m]	0.038 [0.06]

Compliance Certifications (visit www.Pasternack.com for current document)

RoHS Compliant	
REACH Compliant	06/18/2012

Plotted and Other Data

Notes:

- Values at +25 °C, sea level

Flexible RG223 Coax Cable Double Shielded with Black PVC Jacket from Pasternack Enterprises has same day shipment for domestic and International orders. Our RF, microwave and millimeter wave products maintain a 99% availability and are part of the broadest selection in the industry.

Click the following link (or enter part number in "SEARCH" on website) to obtain additional part information including price, inventory and certifications: Flexible RG223 Coax Cable Double Shielded with Black PVC Jacket RG223/U

URL: http://www.pasternack.com/flexible-0.216-rg223-50-ohm-coax-cable-pvc-jacket-rg223-u-p.aspx

The information contained in this document is accurate to the best of our knowledge and representative of the part described herein. It may be necessary to make modifications to the part and/or the documentation of the part, in order to implement improvements. Pasternack reserves the right to make such changes as required. Unless otherwise stated, all specifications are nominal. Pasternack does not make any representation or warranty regarding the suitability of the part described herein for any particular purpose, and Pasternack does not assume any liability arising out of the use of any part or documentation.

Pasternack Enterprises, Inc. • P.O. Box 16759, Irvine, CA 92623
Phone: (866) 727-8376 or (949) 261-1920 • **Fax:** (949) 261-7451
Sales@Pasternack.com • Techsupport@Pasternack.com

© 2014 Pasternack Enterprises All Rights Reserved

RG223/U CAD Drawing

Flexible RG223 Coax Cable Double Shielded with Black PVC Jacket

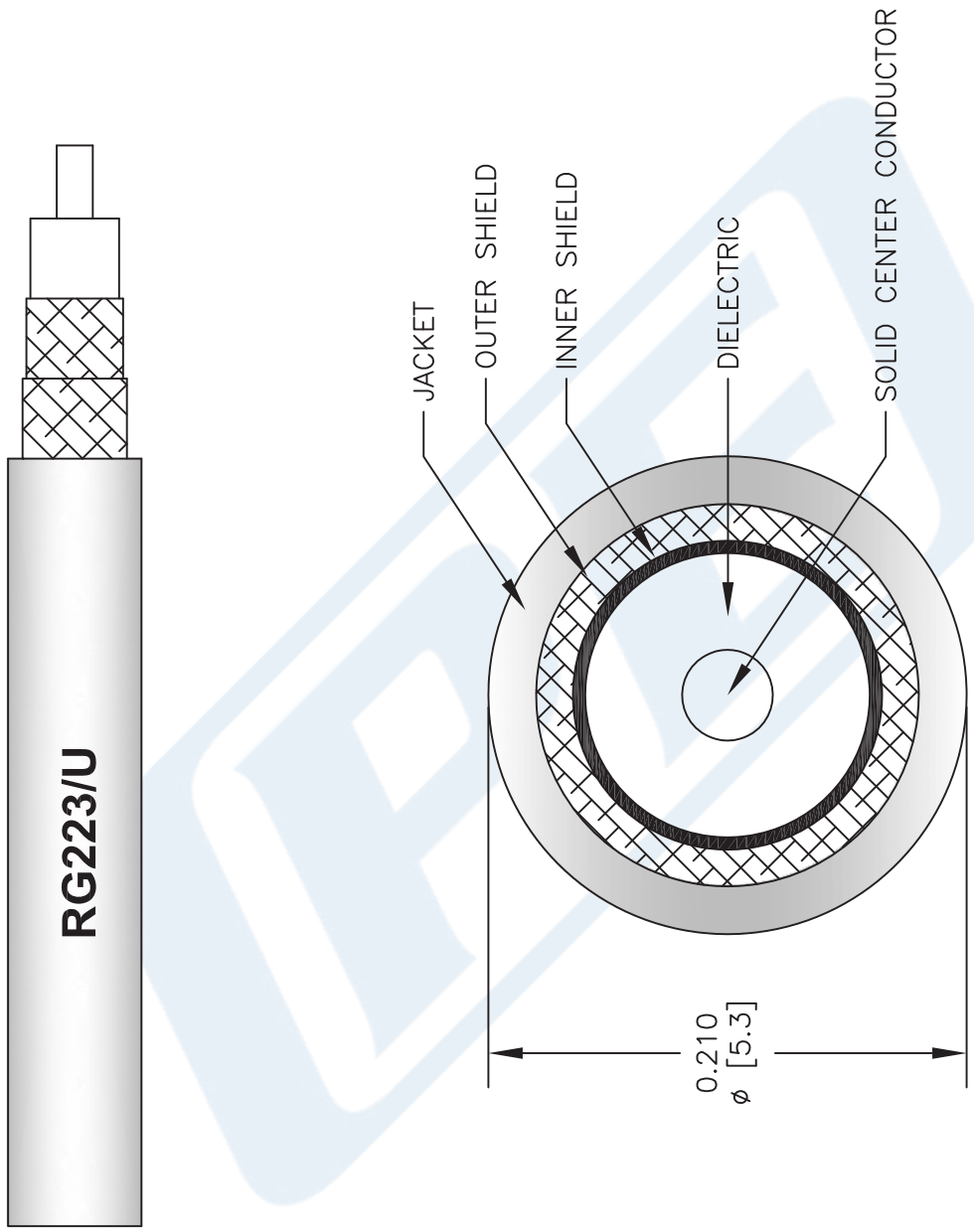

NOTES:
1. UNLESS OTHERWISE SPECIFIED ALL DIMENSIONS ARE NOMINAL.
2. ALL SPECIFICATIONS ARE SUBJECT TO CHANGE WITHOUT NOTICE AT ANY TIME.
3. DIMENSIONS ARE IN INCHES [mm].

DWG TITLE
RG223/U

FSCM NO. 53919

CAD FILE 060508-B | SCALE N/A | SIZE A | 2233

PASTERNACK®
Pasternack Enterprises, Inc.
P.O. Box 16759 | Irvine | CA | 92623
Phone: (949) 261-1920 | **Fax:** (949) 261-7451
Website: www.pasternack.com | **E-Mail:** sales@pasternack.com

© 2014 Pasternack Enterprises All Rights Reserved