PASTERNACK
an INFINITE brand

75 Ohm F Female Bulkhead Mount Connector Crimp/ Solder Attachment for RG59, RG62, RG71

RF Connectors
Technical Data Sheet

PE45552

Configuration

- F Female Connector
- 75 Ohms
- Straight Body Geometry
- Connector Interface Types: RG59, RG62, RG71
- Bulkhead

Features

- Gold Plated Brass Contact

Applications

- General Purpose Test
- Rack and Panel Mount Applications
- Custom Cable Assemblies
- CATV

Description

Pasternack's PE45552 75 ohm type F female bulkhead connector with crimp/solder attachment for RG59, RG62 and RG71 is part of our full line of RF components available for same-day shipping. This type F bulkhead connector allows designers to create external connections on their product enclosures, and can be used in a variety of other rack mount and panel mount applications.

Our 75 ohm type F female bulkhead connector PE45552 datasheet specifications and drawing with dimensions are shown below in this PDF. Pasternack's broad catalog of RF, microwave and millimeter wave connectors allows designers to configure and customize their signal connections however they like. Whether the need is to provide an I/O for a board design, or simply create a custom cable assembly configuration, Pasternack has the right connector for the job. Pasternack can also expertly build your custom cable assemblies for you and ship same-day.

Mechanical Specifications

Size	
Length	1.03 in [26.16 mm]
Width/Dia.	0.38 in [9.65 mm]

Click the following link (or enter part number in "SEARCH" on website) to obtain additional part information including price, inventory and certifications: 75 Ohm F Female Bulkhead Mount Connector Crimp/Solder Attachment for RG59, RG62, RG71 PE45552

Pasternack Enterprises, Inc. • P.O. Box 16759, Irvine, CA 92623
Phone: (866) 727-8376 or (949) 261-1920 • **Fax:** (949) 261-7451
Sales@Pasternack.com • Techsupport@Pasternack.com

© 2019 Pasternack Enterprises All Rights Reserved

75 Ohm F Female Bulkhead Mount Connector Crimp/ Solder Attachment for RG59, RG62, RG71

Material Specifications

Description	Material	Plating
Contact	Brass	Gold
Insulation	PTFE	
Body	Brass	Nickel
Coupling Nut	Brass	Nickel
Crimp Sleeve	Brass	Nickel
Washer	Steel	Nickel

Environmental Specifications

Compliance Certifications (see product page for current document)

Plotted and Other Data

Notes:

75 Ohm F Female Bulkhead Mount Connector Crimp/Solder Attachment for RG59, RG62, RG71 from Pasternack Enterprises has same day shipment for domestic and International orders. Our RF, microwave and millimeter wave products maintain a 99.4% availability and are part of the broadest selection in the industry.

Click the following link (or enter part number in “SEARCH” on website) to obtain additional part information including price, inventory and certifications: 75 Ohm F Female Bulkhead Mount Connector Crimp/Solder Attachment for RG59, RG62, RG71 PE45552

URL: https://www.pasternack.com/f-female-rg59-rg62-rg71-connector-pe45552-p.aspx

The information contained in this document is accurate to the best of our knowledge and representative of the part described herein. It may be necessary to make modifications to the part and/or the documentation of the part, in order to implement improvements. Pasternack reserves the right to make such changes as required. Unless otherwise stated, all specifications are nominal. Pasternack does not make any representation or warranty regarding the suitability of the part described herein for any particular purpose, and Pasternack does not assume any liability arising out of the use of any part or documentation.

Pasternack Enterprises, Inc. • P.O. Box 16759, Irvine, CA 92623
Phone: (866) 727-8376 or (949) 261-1920 • **Fax:** (949) 261-7451
Sales@Pasternack.com • Techsupport@Pasternack.com

© 2019 Pasternack Enterprises All Rights Reserved

PE45552 CAD Drawing

75 Ohm F Female Bulkhead Mount Connector Crimp/
Solder Attachment for RG59, RG62, RG71

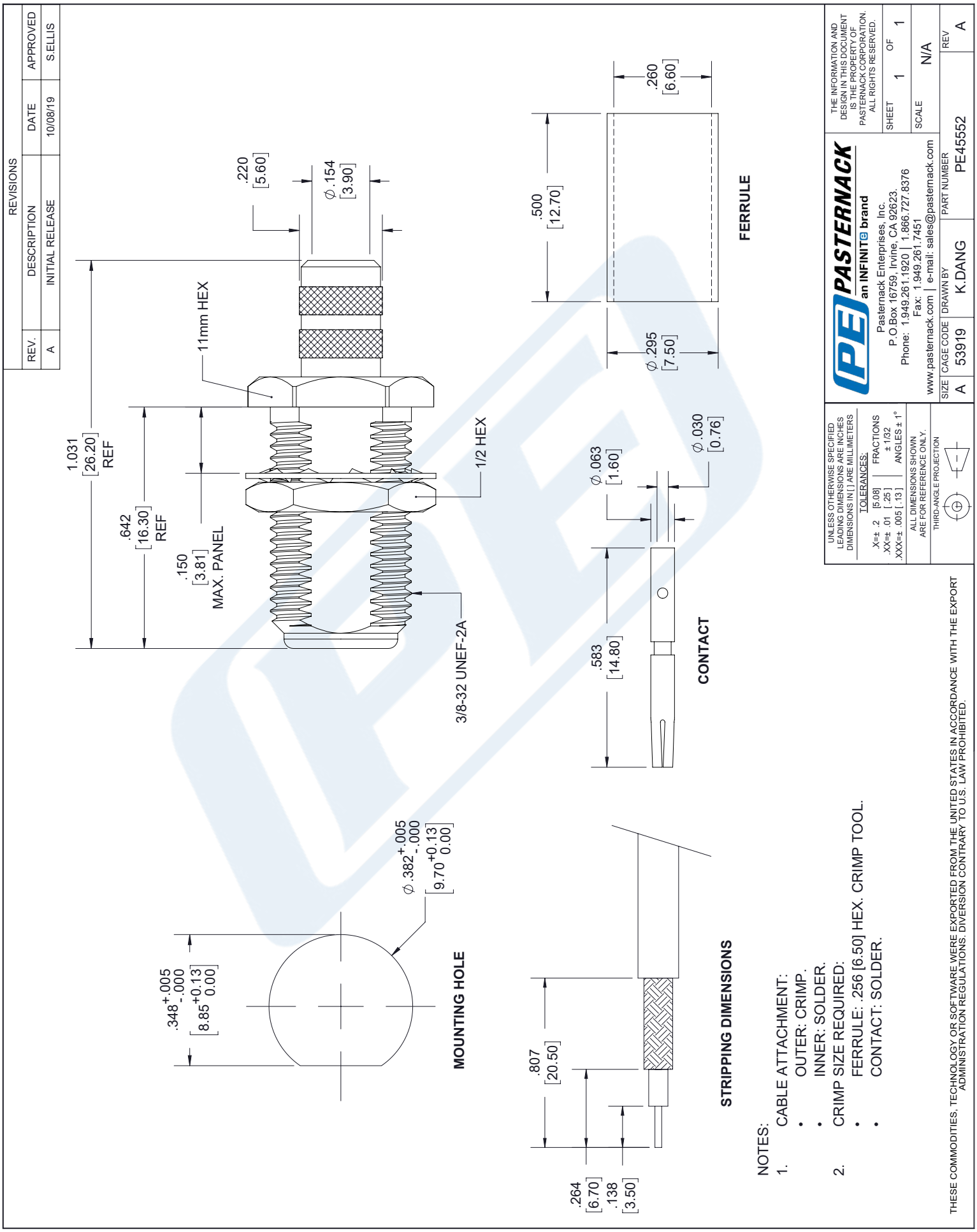

PASTERNACK
an INFINITE brand

75 Ohm TNC Male Connector Crimp/ Solder Attachment for RG59, RG62

RF Connectors Technical Data Sheet

PE44166

Configuration

- TNC Male Connector
- 75 Ohms
- Straight Body Geometry
- Connector Interface Types: RG59, RG62

Features

- Gold Plated Brass Contact
- 30µ in. minimum contact plating

Applications

- General Purpose Test
- Custom Cable Assemblies

Description

Pasternack's PE44166 75 ohm TNC male connector with crimp/solder attachment for RG59 and RG62 is part of our full line of RF components available for same-day shipping.

Our 75 ohm TNC male connector PE44166 datasheet specifications and drawing with dimensions are shown below in this PDF. Pasternack's broad catalog of RF, microwave and millimeter wave connectors allows designers to configure and customize their signal connections however they like. Whether the need is to provide an I/O for a board design, or simply create a custom cable assembly configuration, Pasternack has the right connector for the job. Pasternack can also expertly build your custom cable assemblies for you and ship same-day.

Mechanical Specifications

Size

Length	1.098 in [27.89 mm]
Width/Dia.	0.571 in [14.50 mm]
Weight	0.03 lbs [13.61 g]

Material Specifications

Description	Material	Plating
Contact	Brass	Gold 30µ in. minimum
Body	Brass	Nickel 100µ in. minimum
Coupling Nut	Brass	Nickel 100µ in. minimum

Environmental Specifications

Temperature

Operating Range	-65 to +165 deg C

Click the following link (or enter part number in "SEARCH" on website) to obtain additional part information including price, inventory and certifications: 75 Ohm TNC Male Connector Crimp/Solder Attachment for RG59, RG62 PE44166

Pasternack Enterprises, Inc. • P.O. Box 16759, Irvine, CA 92623
Phone: (866) 727-8376 or (949) 261-1920 • **Fax:** (949) 261-7451
Sales@Pasternack.com • Techsupport@Pasternack.com

© 2020 Pasternack Enterprises All Rights Reserved

75 Ohm TNC Male Connector Crimp/ Solder Attachment for RG59, RG62

RF Connectors
Technical Data Sheet

PE44166

Compliance Certifications (see product page for current document)

Plotted and Other Data

Notes:

75 Ohm TNC Male Connector Crimp/Solder Attachment for RG59, RG62 from Pasternack Enterprises has same day shipment for domestic and International orders. Our RF, microwave and millimeter wave products maintain a 99.4% availability and are part of the broadest selection in the industry.

Click the following link (or enter part number in “SEARCH” on website) to obtain additional part information including price, inventory and certifications: 75 Ohm TNC Male Connector Crimp/Solder Attachment for RG59, RG62 PE44166

URL: https://www.pasternack.com/tnc-male-rg59-rg62-connector-pe44166-p.aspx

The information contained in this document is accurate to the best of our knowledge and representative of the part described herein. It may be necessary to make modifications to the part and/or the documentation of the part, in order to implement improvements. Pasternack reserves the right to make such changes as required. Unless otherwise stated, all specifications are nominal. Pasternack does not make any representation or warranty regarding the suitability of the part described herein for any particular purpose, and Pasternack does not assume any liability arising out of the use of any part or documentation.

Pasternack Enterprises, Inc. • P.O. Box 16759, Irvine, CA 92623
Phone: (866) 727-8376 or (949) 261-1920 • **Fax:** (949) 261-7451
Sales@Pasternack.com • Techsupport@Pasternack.com

© 2020 Pasternack Enterprises All Rights Reserved

PE44166 CAD Drawing

75 Ohm TNC Male Connector Crimp/Solder Attachment for RG59, RG62

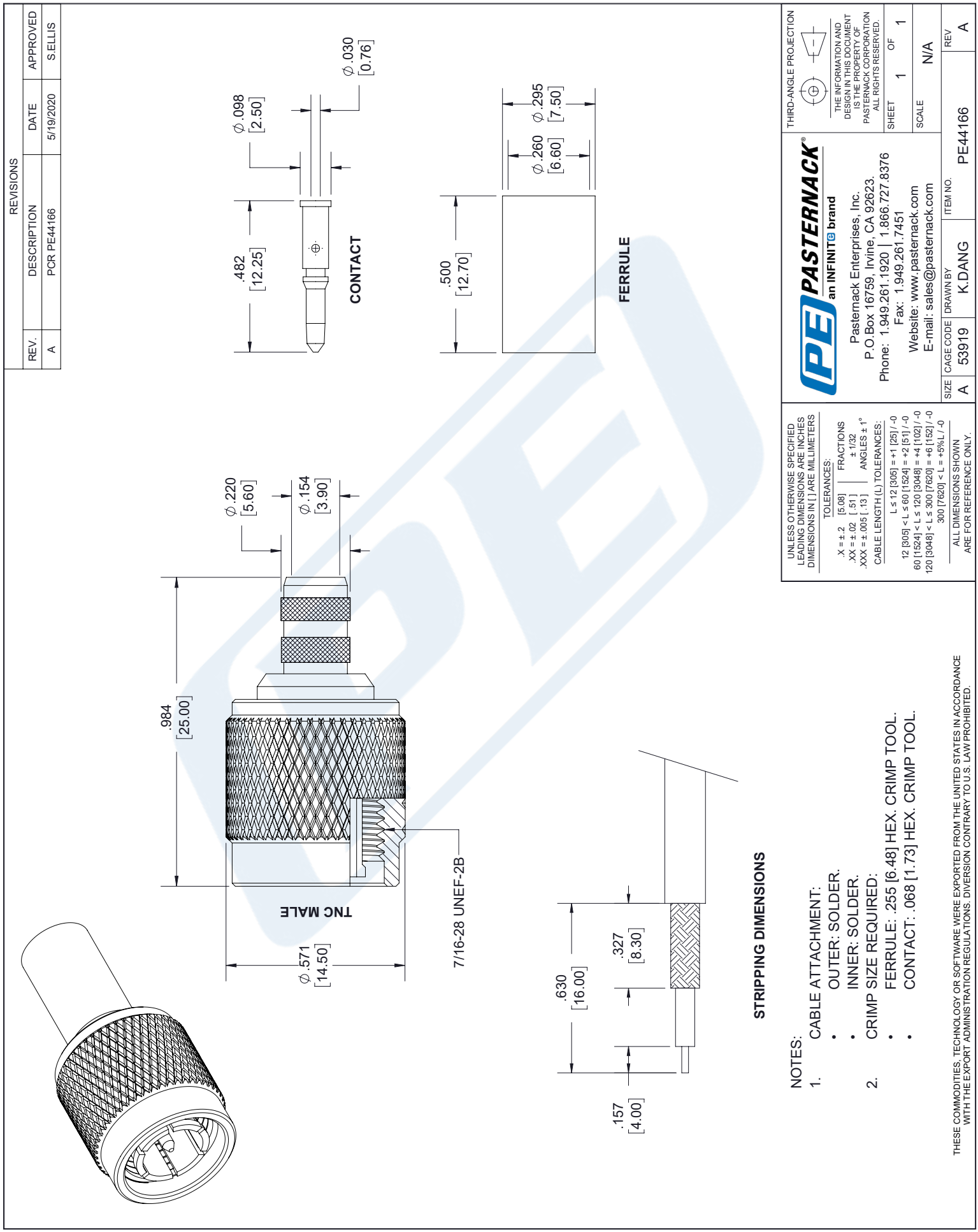

PASTERNACK
an INFINITE brand

75 Ohm Flexible RG59 Coax Cable Single Shielded with Black PVC (NC) Jacket

RF Cables
Technical Data Sheet

RG59B/U

Configuration

- Flexible Cable
- 1 Shield(s)

Electrical Specifications

Description	Minimum	Typical	Maximum	Units
Frequency Range	DC		1,000	MHz
Impedance		75 3		Ohms
Velocity of Propagation		66		%
Operating Voltage (AC)			2,300	Vrms
Nominal Capacitance		20.4 [66.93]		pF/ft [pF/m]

Performance by Frequency Band

Description	F1	F2	F3	F4	F5	Units
Frequency	100	200	550	800	1,000	MHz
Attenuation, Max	3.81	5.37	9.18	11.21	12.68	dB/100ft
	12.5	17.62	30.12	36.78	41.6	dB/100m

Mechanical Specifications

Diameter	0.242 in [6.15 mm]
Weight	0.039 lbs/ft [0.06 Kg/m]

Construction Specifications

Description	Material and Plating	Diameter
Inner Conductor	Copper Clad Steel1	0.022 in 0.56 mm
Conductor Type	Solid	
Dielectric	PE	0.146 in 3.71 mm
First Shield	Copper Braid	0.165 in 4.19 mm

Click the following link (or enter part number in “SEARCH” on website) to obtain additional part information including price, inventory and certifications: 75 Ohm Flexible RG59 Coax Cable Single Shielded with Black PVC (NC) Jacket RG59B/U

Pasternack Enterprises, Inc. • P.O. Box 16759, Irvine, CA 92623
Phone: (866) 727-8376 or (949) 261-1920 • **Fax:** (949) 261-7451
Sales@Pasternack.com • Techsupport@Pasternack.com

© 2019 Pasternack Enterprises All Rights Reserved

75 Ohm Flexible RG59 Coax Cable Single Shielded with Black PVC (NC) Jacket

Jacket	PVC (NC), Black	0.242 in [6.15 mm]

Environmental Specifications

Temperature

Operating Range	-25 to +70 deg C

Compliance Certifications (see product page for current document)

Plotted and Other Data

Notes:

75 Ohm Flexible RG59 Coax Cable Single Shielded with Black PVC (NC) Jacket from Pasternack Enterprises has same day shipment for domestic and International orders. Our RF, microwave and millimeter wave products maintain a 99.4% availability and are part of the broadest selection in the industry.

Click the following link (or enter part number in “SEARCH” on website) to obtain additional part information including price, inventory and certifications: 75 Ohm Flexible RG59 Coax Cable Single Shielded with Black PVC (NC) Jacket RG59B/U

URL: https://www.pasternack.com/flexible-0.242-rg59-75-ohm-coax-cable-pvc-jacket-rg59b-u-p.aspx

The information contained in this document is accurate to the best of our knowledge and representative of the part described herein. It may be necessary to make modifications to the part and/or the documentation of the part, in order to implement improvements. Pasternack reserves the right to make such changes as required. Unless otherwise stated, all specifications are nominal. Pasternack does not make any representation or warranty regarding the suitability of the part described herein for any particular purpose, and Pasternack does not assume any liability arising out of the use of any part or documentation.

Pasternack Enterprises, Inc. • P.O. Box 16759, Irvine, CA 92623
Phone: (866) 727-8376 or (949) 261-1920 • **Fax:** (949) 261-7451
Sales@Pasternack.com • Techsupport@Pasternack.com

© 2019 Pasternack Enterprises All Rights Reserved

RG59B/U CAD Drawing

75 Ohm Flexible RG59 Coax Cable Single Shielded with Black PVC (NC) Jacket

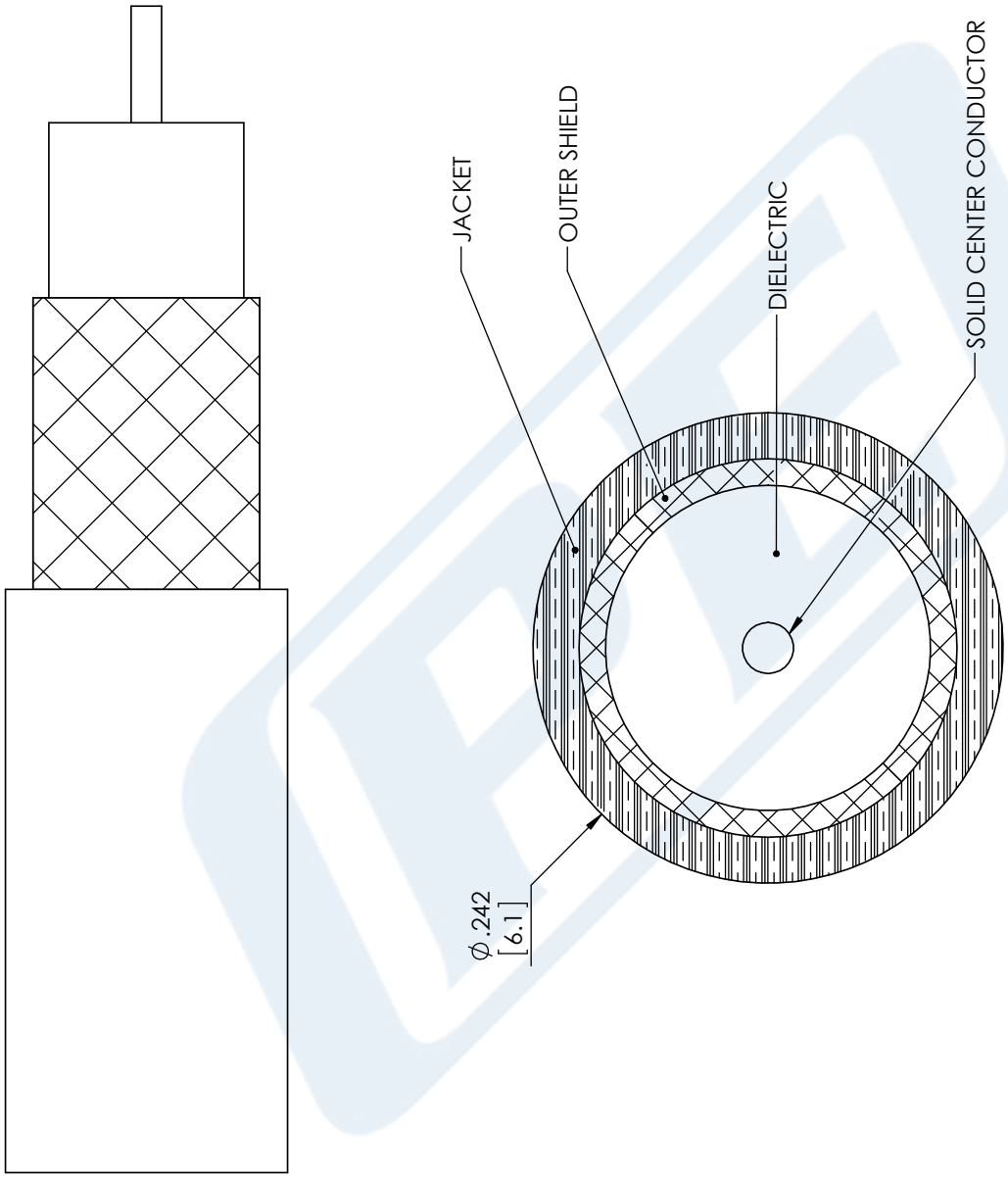

STANDARD TOLERANCES	
.X	±0.2
.XX	±0.01
.XXX	±0.005

*STANDARD TOLERANCES APPLY ONLY TO DIMENSIONS IN INCHES

NOTES:
1. UNLESS OTHERWISE SPECIFIED ALL DIMENSIONS ARE NOMINAL.
2. ALL SPECIFICATIONS ARE SUBJECT TO CHANGE WITHOUT NOTICE AT ANY TIME
3. DIMENSIONS ARE IN INCHES [mm].

DWG TITLE RG59B/U

CAD FILE 11/28/17 | SCALE N/A | SIZE A | CN2245

CAGE CODE 53919

PASTERNACK® THE ENGINEER'S RF SOURCE
Pasternack Enterprises, Inc.
P.O. Box 16759 | Irvine | CA | 92623
Phone: (949) 261-1920 | **Fax:** (949) 261-7451
Website: www.pasternack.com | **E-Mail:** sales@pasternack.com

© 2019 Pasternack Enterprises All Rights Reserved