PASTERNACK
an INFINITE brand

1.0/2.3 Plug Low PIM Connector Solder Attachment for TFT-402, TFT-402-LF

RF Connectors
Technical Data Sheet

TIMES MICROWAVE SYSTEMS An Amphenol Company

TC-402-1023M-LP

Times Microwave Systems Connector Specification

Configuration

- 1.0/2.3 Plug Connector
- 50 Ohms
- Straight Body Geometry
- Connector Interface Types: TFT-402, TFT-402-LF
- Low PIM Design

Features

- Max. Operating Frequency 6 GHz
- Good VSWR of 1.3:1
- PIM levels lower than -150 dBc
- Silver Plated Brass Contact
- 200 µin contact plating

Applications

- General Purpose Test
- Wireless Communications
- Custom Cable Assemblies
- Low PIM Applications
- Distributed Antenna Systems (DAS)

Description

Pasternack's TC-402-1023M-LP 1.0/2.3 plug connector with solder/solder attachment for TFT-402 and TFT-402-LF is part of our full line of RF components available for same-day shipping. Our 1.0/2.3 plug connector operates up to a maximum frequency of 6 GHz and offers good VSWR of 1.3:1. The 1.0/2.3 plug connector also has low passive intermodulation of -150 dBc.

Our 1.0/2.3 plug connector TC-402-1023M-LP datasheet specifications and drawing with dimensions are shown below in this PDF. Pasternack's broad catalog of RF, microwave and millimeter wave connectors allows designers to configure and customize their signal connections however they like. Whether the need is to provide an I/O for a board design, or simply create a custom cable assembly configuration, Pasternack has the right connector for the job. Pasternack can also expertly build your custom cable assemblies for you and ship same-day.

Electrical Specifications

Description	Minimum	Typical	Maximum	Units
Frequency Range	DC		6	GHz
VSWR			1.3:1	
Insertion Loss			0.24	dB
Passive Intermodulation			-150	dBc
Operating Voltage (DC)			2,500	Vdc
Insulation Resistance	10,000			MOhms

Electrical Specification Notes:
Insertion Loss is 0.1*sqrt(FGHz)

Click the following link (or enter part number in "SEARCH" on website) to obtain additional part information including price, inventory and certifications: 1.0/2.3 Plug Low PIM Connector Solder Attachment for TFT-402, TFT-402-LF TC-402-1023M-LP

Pasternack Enterprises, Inc. • P.O. Box 16759, Irvine, CA 92623
Phone: (866) 727-8376 or (949) 261-1920 • **Fax:** (949) 261-7451
Sales@Pasternack.com • Techsupport@Pasternack.com

© 2020 Pasternack Enterprises All Rights Reserved

PASTERNACK
an INFINITE brand

1.0/2.3 Plug Low PIM Connector Solder Attachment for TFT-402, TFT-402-LF

RF Connectors Technical Data Sheet

TIMES MICROWAVE SYSTEMS An Amphenol Company

TC-402-1023M-LP

Mechanical Specifications

Size

Length	0.93 in [23.62 mm]
Width/Dia.	0.33 in [8.38 mm]
Mating Cycles	500 Cycles
Cable Retention Force	112 lbs [50.8 kg]

Material Specifications

Description	Material	Plating
Contact	Brass	Silver 200 µin
Insulation	PTFE	
Body	Brass	Tri-Metal 80 µin
Coupling Nut	Brass	Tri-Metal 80 µin

Environmental Specifications

Temperature

Operating Range	-40 to +125 deg C
Shock	MIL-STD 202G, Meth. 213, Cond. I
Vibration	MIL-STD 202G, Meth. 204, Cond. B
Thermal Shock	MIL-STD 202G, Meth. 107, Cond. B

Environmental Specification Notes:
Climatic Class: IEC 60068 55/155/56

Compliance Certifications (see product page for current document)

Plotted and Other Data

Notes:

Click the following link (or enter part number in “SEARCH” on website) to obtain additional part information including price, inventory and certifications: 1.0/2.3 Plug Low PIM Connector Solder Attachment for TFT-402, TFT-402-LF TC-402-1023M-LP

Pasternack Enterprises, Inc. • P.O. Box 16759, Irvine, CA 92623
Phone: (866) 727-8376 or (949) 261-1920 • **Fax:** (949) 261-7451
Sales@Pasternack.com • Techsupport@Pasternack.com

© 2020 Pasternack Enterprises All Rights Reserved

PASTERNACK
an INFINITE brand

1.0/2.3 Plug Low PIM Connector Solder Attachment for TFT-402, TFT-402-LF

RF Connectors
Technical Data Sheet

TIMES MICROWAVE SYSTEMS An Amphenol Company

TC-402-1023M-LP

1.0/2.3 Plug Low PIM Connector Solder Attachment for TFT-402, TFT-402-LF from Pasternack Enterprises has same day shipment for domestic and International orders. Our RF, microwave and millimeter wave products maintain a 99.4% availability and are part of the broadest selection in the industry.

Click the following link (or enter part number in “SEARCH” on website) to obtain additional part information including price, inventory and certifications: 1.0/2.3 Plug Low PIM Connector Solder Attachment for TFT-402, TFT-402-LF TC-402-1023M-LP

URL: https://www.pasternack.com/1.0-2.3-plug-tft-402-connector-tc-402-1023m-lp-p.aspx

The information contained in this document is accurate to the best of our knowledge and representative of the part described herein. It may be necessary to make modifications to the part and/or the documentation of the part, in order to implement improvements. Pasternack reserves the right to make such changes as required. Unless otherwise stated, all specifications are nominal. Pasternack does not make any representation or warranty regarding the suitability of the part described herein for any particular purpose, and Pasternack does not assume any liability arising out of the use of any part or documentation.

Pasternack Enterprises, Inc. • P.O. Box 16759, Irvine, CA 92623
Phone: (866) 727-8376 or (949) 261-1920 • **Fax:** (949) 261-7451
Sales@Pasternack.com • Techsupport@Pasternack.com

© 2020 Pasternack Enterprises All Rights Reserved

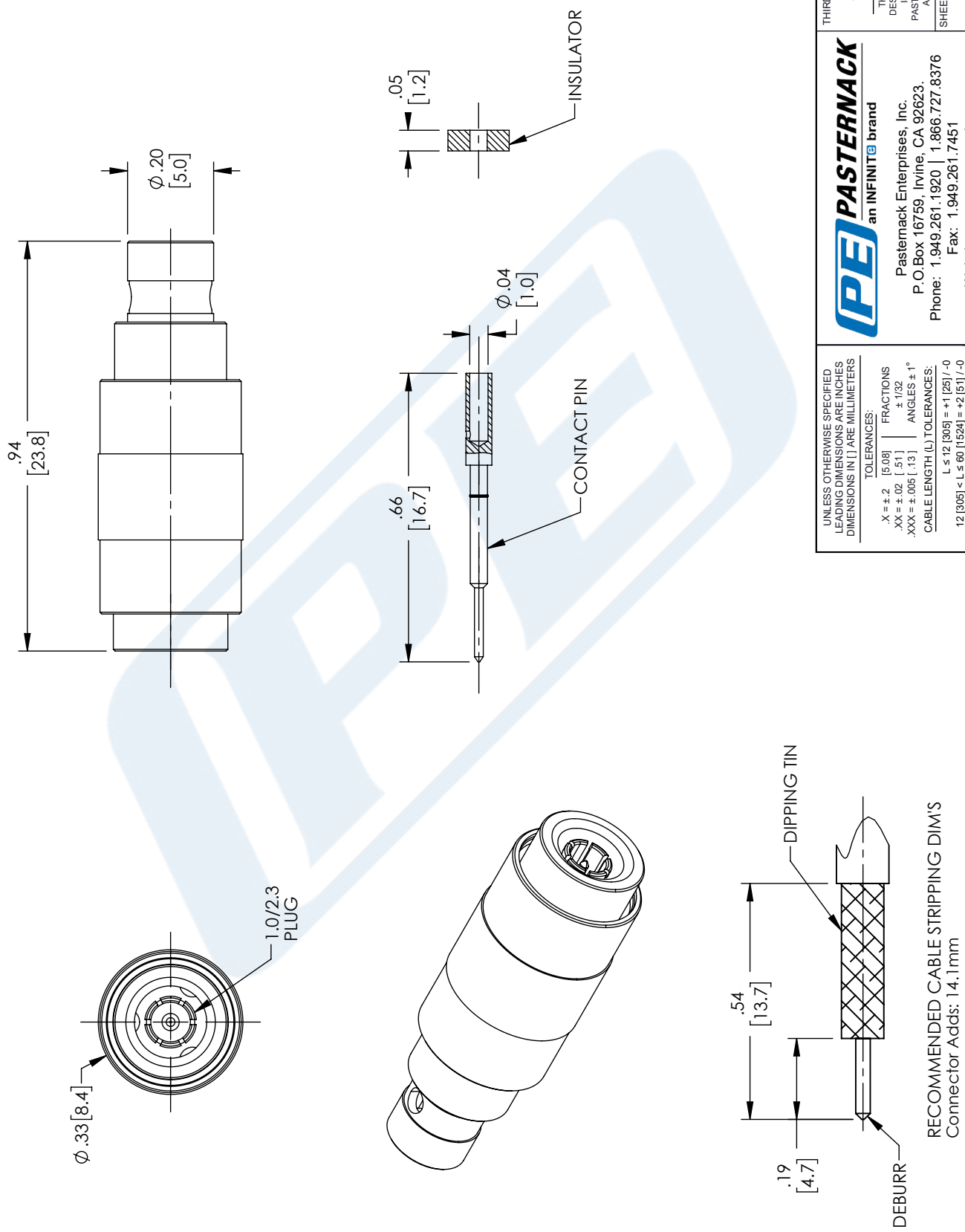

© 2020 Pasternack Enterprises All Rights Reserved

PASTERNACK
an INFINITE brand

N Male Low PIM Connector Solder Attachment for TFT-402, TFT-402-LF

RF Connectors
Technical Data Sheet

TIMES MICROWAVE SYSTEMS

TC-402-NM-LP

Times Microwave Systems Connector Specification

Configuration

- N Male Connector
- 50 Ohms
- Straight Body Geometry
- Connector Interface Types: TFT-402, TFT-402-LF
- Low PIM Design

Features

- Max. Operating Frequency 6 GHz
- Good VSWR of 1.3:1
- PIM levels lower than -160 dBc
- Silver Plated Brass Contact
- 200 µin contact plating

Applications

- General Purpose Test
- Wireless Communications
- Custom Cable Assemblies
- Low PIM Applications
- Distributed Antenna Systems (DAS)

Description

Pasternack's TC-402-NM-LP type N male connector with solder/solder attachment for TFT-402 and TFT-402-LF is part of our full line of RF components available for same-day shipping. Our type N male connector operates up to a maximum frequency of 6 GHz and offers good VSWR of 1.3:1. The type N male connector also has low passive intermodulation of -160 dBc.

Our type N male connector TC-402-NM-LP datasheet specifications and drawing with dimensions are shown below in this PDF. Pasternack's broad catalog of RF, microwave and millimeter wave connectors allows designers to configure and customize their signal connections however they like. Whether the need is to provide an I/O for a board design, or simply create a custom cable assembly configuration, Pasternack has the right connector for the job. Pasternack can also expertly build your custom cable assemblies for you and ship same-day.

Electrical Specifications

Description	Minimum	Typical	Maximum	Units
Frequency Range	DC		6	GHz
VSWR			1.3:1	
Insertion Loss			0.24	dB
Passive Intermodulation			-160	dBc
Operating Voltage (DC)			2,500	Vdc
Insulation Resistance	10,000			MOhms

Electrical Specification Notes:
Insertion Loss is 0.1*sqrt(FGHz)

Click the following link (or enter part number in "SEARCH" on website) to obtain additional part information including price, inventory and certifications: N Male Low PIM Connector Solder Attachment for TFT-402, TFT-402-LF TC-402-NM-LP

Pasternack Enterprises, Inc. • P.O. Box 16759, Irvine, CA 92623
Phone: (866) 727-8376 or (949) 261-1920 • **Fax:** (949) 261-7451
Sales@Pasternack.com • Techsupport@Pasternack.com

© 2020 Pasternack Enterprises All Rights Reserved

N Male Low PIM Connector Solder Attachment for TFT-402, TFT-402-LF

Mechanical Specifications

Size

Length	1.043 in [26.49 mm]
Width/Dia.	0.808 in [20.52 mm]
Mating Cycles	500 Cycles
Mating Torque	15 in-lbs [1.70 Nm]
Cable Retention Force	56 lbs [25.4 kg]

Material Specifications

Description	Material	Plating
Contact	Brass	Silver 200 µin
Insulation	PTFE	
Body	Brass	Tri-Metal 80 µin
Coupling Nut	Brass	Tri-Metal 80 µin
Gasket	Silicone Rubber	

Environmental Specifications

Temperature

Operating Range	-40 to +125 deg C
Shock	MIL-STD 202G, Meth. 213, Cond. I
Vibration	MIL-STD 202G, Meth. 204, Cond. B
Thermal Shock	MIL-STD 202G, Meth. 107, Cond. B

Environmental Specification Notes:
Climatic Class: IEC 60068 55/155/56

Compliance Certifications (see product page for current document)

Plotted and Other Data

Notes:

Click the following link (or enter part number in “SEARCH” on website) to obtain additional part information including price, inventory and certifications: N Male Low PIM Connector Solder Attachment for TFT-402, TFT-402-LF TC-402-NM-LP

Pasternack Enterprises, Inc. • P.O. Box 16759, Irvine, CA 92623
Phone: (866) 727-8376 or (949) 261-1920 • **Fax:** (949) 261-7451
Sales@Pasternack.com • Techsupport@Pasternack.com

© 2020 Pasternack Enterprises All Rights Reserved

N Male Low PIM Connector Solder Attachment for TFT-402, TFT-402-LF

RF Connectors
Technical Data Sheet

TC-402-NM-LP

N Male Low PIM Connector Solder Attachment for TFT-402, TFT-402-LF from Pasternack Enterprises has same day shipment for domestic and International orders. Our RF, microwave and millimeter wave products maintain a 99.4% availability and are part of the broadest selection in the industry.

Click the following link (or enter part number in “SEARCH” on website) to obtain additional part information including price, inventory and certifications: N Male Low PIM Connector Solder Attachment for TFT-402, TFT-402-LF TC-402-NM-LP

URL: https://www.pasternack.com/n-male-tft-402-connector-tc-402-nm-lp-p.aspx

The information contained in this document is accurate to the best of our knowledge and representative of the part described herein. It may be necessary to make modifications to the part and/or the documentation of the part, in order to implement improvements. Pasternack reserves the right to make such changes as required. Unless otherwise stated, all specifications are nominal. Pasternack does not make any representation or warranty regarding the suitability of the part described herein for any particular purpose, and Pasternack does not assume any liability arising out of the use of any part or documentation.

Pasternack Enterprises, Inc. • P.O. Box 16759, Irvine, CA 92623
Phone: (866) 727-8376 or (949) 261-1920 • **Fax:** (949) 261-7451
Sales@Pasternack.com • Techsupport@Pasternack.com

© 2020 Pasternack Enterprises All Rights Reserved

TC-402-NM-LP CAD Drawing

N Male Low PIM Connector Solder Attachment for TFT-402, TFT-402-LF

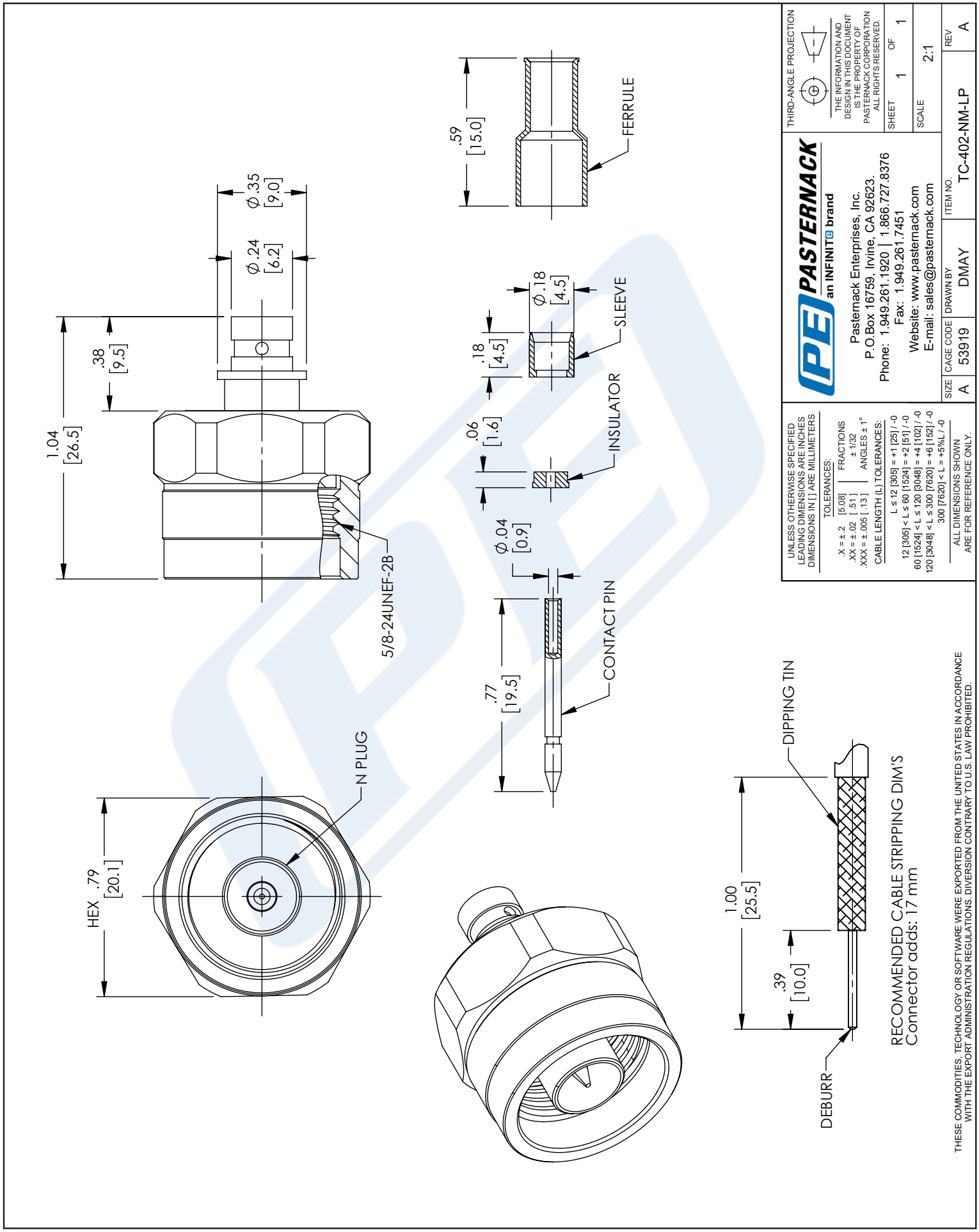

© 2020 Pasternack Enterprises All Rights Reserved

PASTERNACK
an INFINITE brand

Low PIM Flexible TFT-5G-402 Coax Cable Double Shielded with Blue FEP Jacket

RF Cables
Technical Data Sheet

TFT-5G-402

Times Microwave Systems Coax Cable Specification

Configuration

- Low PIM Flexible Cable
- 2 Shield(s)

Features

- PIM < -160 dBc
- UL910 Plenum Rated Cable
- Lightweight and Extremely Flexible
- Low Loss
- Good Shielding >80 dB
- UV Resistant Jacket

Applications

- Base Stations
- Antenna Pigtails
- Distributed Antenna Systems (DAS)
- Plenum Installations
- Small Cells
- Multi-Carrier Communication Systems

Description

TFT-5G-402 low pim flexible coax cable by Times Microwave is part of our full line of RF components available for same-day shipping. The TFT-5G-402 plenum rated coaxial cable features a taped PTFE dielectric, solid copper center conductor and a dual-braid outer conductor. These features combine to make the Times Microwave TFT-5G-402 an extremely flexible, low loss and low PIM coax cable that is well suited for Distributed Antenna Systems (DAS), plenum installations or small cells. The tough, FEP jacket provides moisture, UV protection and resistance to corrosive environments.

Our datasheet specifications and drawing with dimensions for Times Microwave TFT-5G-402 coax cable are shown below in this PDF. Whether the need is to provide a low PIM jumper connection, low PIM antenna pigtails or simply create a custom cable assembly configuration, Pasternack has the right TFT-5G-402 cable assemblies for the job.

Electrical Specifications

Description	Minimum	Typical	Maximum	Units
Frequency Range	DC		5.8	GHz
Impedance		50		Ohms
Velocity of Propagation		76		%
Shielding Effectiveness	80			dB
Passive Intermodulation			-160	dBc
Nominal Capacitance		26.7 [87.6]		pF/ft [pF/m]

Click the following link (or enter part number in “SEARCH” on website) to obtain additional part information including price, inventory and certifications: Low PIM Flexible TFT-5G-402 Coax Cable Double Shielded with Blue FEP Jacket TFT-5G-402

Pasternack Enterprises, Inc. • P.O. Box 16759, Irvine, CA 92623
Phone: (866) 727-8376 or (949) 261-1920 • **Fax:** (949) 261-7451
Sales@Pasternack.com • Techsupport@Pasternack.com

© 2020 Pasternack Enterprises All Rights Reserved

Low PIM Flexible TFT-5G-402 Coax Cable Double Shielded with Blue FEP Jacket

RF Cables
Technical Data Sheet

TFT-5G-402

Performance by Frequency Band

Description	F1	F2	F3	F4	F5	Units
Frequency	0.45	1.9	2.3	4.9	5.8	GHz
Attenuation, Typ	7.9	16.4	18.2	27	29.5	dB/100ft
	25.92	53.81	59.71	88.58	96.78	dB/100m
Input Power (CW), Max	430	200	180	120	110	Watts

Mechanical Specifications

Diameter	0.16 in [4.06 mm}
Weight	0.028 lbs/ft [0.04 kg/m]
Min. Bend Radius (Installation)	0.75 in [19.05 mm]

Construction Specifications

Description	Material and Plating	Diameter
Inner Conductor	Copper, 1 Strand	0.037 in [0.94 mm]
Conductor Type	Solid	
Dielectric	PTFE	0.113 in [2.87 mm]
First Shield	Tin	0.121 in [3.07 mm]
Outer Conductor	Copper, Tin	0 in [0 mm]
Jacket	FEP, Blue	0.16 in [4.06 mm]

Environmental Specifications

Temperature

Operating Range	-55 to +150 deg C

Click the following link (or enter part number in “SEARCH” on website) to obtain additional part information including price, inventory and certifications: Low PIM Flexible TFT-5G-402 Coax Cable Double Shielded with Blue FEP Jacket TFT-5G-402

Pasternack Enterprises, Inc. • P.O. Box 16759, Irvine, CA 92623
Phone: (866) 727-8376 or (949) 261-1920 • **Fax:** (949) 261-7451
Sales@Pasternack.com • Techsupport@Pasternack.com

© 2020 Pasternack Enterprises All Rights Reserved

Low PIM Flexible TFT-5G-402 Coax Cable Double Shielded with Blue FEP Jacket

Compliance Certifications (see product page for current document)

Plotted and Other Data

Notes:

Low PIM Flexible TFT-5G-402 Coax Cable Double Shielded with Blue FEP Jacket from Pasternack Enterprises has same day shipment for domestic and International orders. Our RF, microwave and millimeter wave products maintain a 99.4% availability and are part of the broadest selection in the industry.

Click the following link (or enter part number in “SEARCH” on website) to obtain additional part information including price, inventory and certifications: Low PIM Flexible TFT-5G-402 Coax Cable Double Shielded with Blue FEP Jacket TFT-5G-402

URL: https://www.pasternack.com/low-pim-flexible-tft-5g-402-fep-jacket-tin-outer-conductor-double-shielded-tft-5g-402-p.aspx

The information contained in this document is accurate to the best of our knowledge and representative of the part described herein. It may be necessary to make modifications to the part and/or the documentation of the part, in order to implement improvements. Pasternack reserves the right to make such changes as required. Unless otherwise stated, all specifications are nominal. Pasternack does not make any representation or warranty regarding the suitability of the part described herein for any particular purpose, and Pasternack does not assume any liability arising out of the use of any part or documentation.

Pasternack Enterprises, Inc. • P.O. Box 16759, Irvine, CA 92623
Phone: (866) 727-8376 or (949) 261-1920 • **Fax:** (949) 261-7451
Sales@Pasternack.com • Techsupport@Pasternack.com

© 2020 Pasternack Enterprises All Rights Reserved

TFT-5G-402 CAD Drawing

Low PIM Flexible TFT-5G-402 Coax Cable Double Shielded with Blue FEP Jacket

REVISIONS

REV.	DESCRIPTION	DATE	APPROVED
A	INITIAL RELEASE	09/13/2022	A. GANWANI

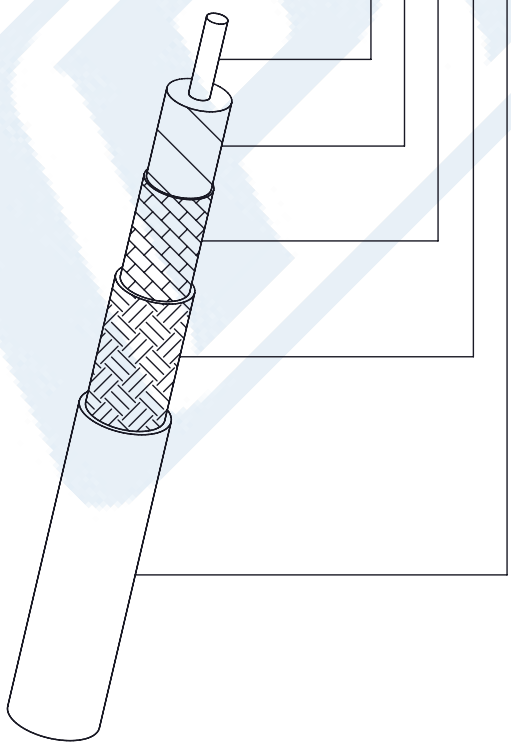

Center Conductor	.037 [0.94]	Bare Copper
Dielectric	.113 [2.87]	Taped PTFE
Shield	.121 [3.07]	Tin Plated Flat Braid
Outer Braid	.138 [3.51]	Tin Plated Copper Braid
Jacket	.160 [4.06]	Blue FEP

UNLESS OTHERWISE SPECIFIED
LEADING DIMENSIONS ARE INCHES
DIMENSIONS IN [ ] ARE MILLIMETERS

TOLERANCES:

.X = ± .2 [5.08] | FRACTIONS ± 1/32
.XX = ± .02 [.51] | ANGLES ± 1°
.XXX = ± .005 [.13]

CABLE LENGTH (L) TOLERANCES:

L ≤ 12 [305] = +1 [25] / -0
12 [305] < L ≤ 60 [1524] = +2 [51] / -0
60 [1524] < L ≤ 120 [3048] = +4 [102] / -0
120 [3048] < L ≤ 300 [7620] = +6 [152] / -0
300 [7620] < L = +5%L / -0

ALL DIMENSIONS SHOWN ARE FOR REFERENCE ONLY.

PASTERNACK® an INFINITE brand

Pasternack Enterprises, Inc.
P.O.Box 16759, Irvine, CA 92623.
Phone: 1.949.261.1920 | 1.866.727.8376
Fax: 1.949.261.7451
Website: www.pasternack.com
E-mail: sales@pasternack.com

THIRD-ANGLE PROJECTION

THE INFORMATION AND DESIGN IN THIS DOCUMENT IS THE PROPERTY OF PASTERNACK CORPORATION ALL RIGHTS RESERVED.

SHEET 1 OF 1

SCALE N/A

SIZE	CAGE CODE	DRAWN BY	ITEM NO.	REV
A	53919	K.DANG	TFT-5G-402	A

THESE COMMODITIES, TECHNOLOGY OR SOFTWARE WERE EXPORTED FROM THE UNITED STATES IN ACCORDANCE WITH THE EXPORT ADMINISTRATION REGULATIONS. DIVERSION CONTRARY TO U.S. LAW PROHIBITED.

T-Rev.D