MATERIALS	
BODY	BRASS NICKEL PLATED
CONTACT	GOLD PLATED
INSULATOR	PTFE

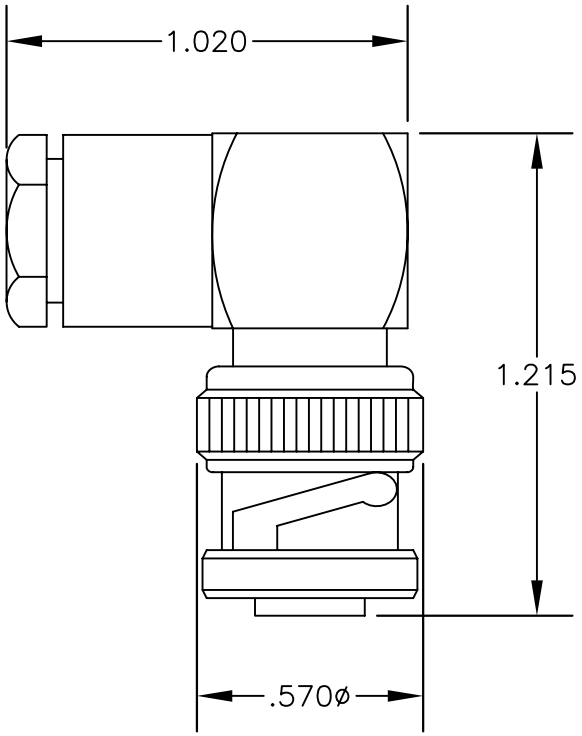

ASSEMBLY PROCEDURES

1. SLIDE CLAMP NUT (1), WASHER (2) & GASKET (3) OVER CABLE. STRIP CABLE AS SHOWN. DO NOT NICK BRAID WHILE CUTTING JACKET. TAPER END OF BRAID TO PERMIT ASSEMBLY OF BRAID CLAMP (4). SLIDE BRAID CLAMP (4) OVER BRAID & SEAT AGAINST CABLE.

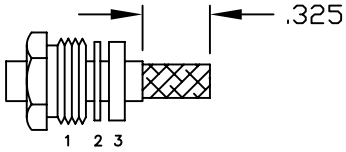

2. FORM BRAID OVER CLAMP NUT (4). TRIM BRAID BACK TO SHOULDER. CUT DIELECTRIC & CENTER CONDUCTOR TO DIMENSION SHOWN. DO NOT NICK CENTER CONDUCTOR. INSERT CABLE INTO BODY. AND TIGHTEN HARDWARE. SOLDER CENTER CONDUCTOR IN PLACE THEN & SCREW CAP DOWN.

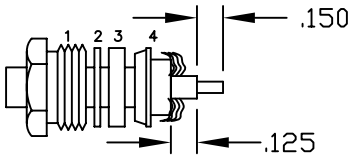

PASTERNACK ENTERPRISES®
ESTABLISHED 1972

PASTERNACK ENTERPRISES, INC.
P.O BOX 16759, IRVINE, CA 92623
PHONE (949) 261-1920 FAX (949) 261-7451

WEB ADDRESS: www.pasternack.com
E-MAIL ADDRESS: sales@pasternack.com
COAXIAL & FIBER OPTICS

DWG TITLE	DES.
PE4710	MHV MALE, RIGHT ANGLE, CLAMP ATTACHMENT FOR RG174, RG188 & RG316

SIZE A	FSCM NO. 53919	CAD FILE 060302	SCALE N/A		127

NOTES:
1. UNLESS OTHERWISE SPECIFIED ALL DIMENSIONS ARE NOMINAL.
2. ALL SPECIFICATIONS ARE SUBJECT TO CHANGE WITHOUT NOTICE AT ANY TIME.

PASTERNACK
an INFINITE brand

FAKRA Plug Connector Crimp/Solder Attachment for RG174, RG316, RG188, .100 inch, PE-B100, PE-C100, LMR-100, Black Color

RF Connectors
Technical Data Sheet

PE45404A

Configuration

- FAKRA Plug Connector
- 50 Ohms
- Straight Body Geometry
- RG174, RG316, RG188, .100 inch, PE-B100, PE-C100, LMR-100 Interface Type
- Crimp/Solder Attachment

Features

- Max. Operating Frequency 4 GHz
- Good VSWR of 1.3:1
- Gold Plated Phosphor Bronze Contact

Applications

- General Purpose Test
- Custom Cable Assemblies

Description

Pasternack's PE45404A FAKRA plug connector with crimp/solder attachment for RG174, RG316, RG188, .100 inch, PE-B100, PE-C100 and LMR-100 is part of our full line of RF components available for same-day shipping. Our FAKRA plug connector operates up to a maximum frequency of 4 GHz and offers good VSWR of 1.3:1.

Our FAKRA plug connector PE45404A datasheet specifications and drawing with dimensions are shown below in this PDF. Pasternack's broad catalog of RF, microwave and millimeter wave connectors allows designers to configure and customize their signal connections however they like. Whether the need is to provide an I/O for a board design, or simply create a custom cable assembly configuration, Pasternack has the right connector for the job. Pasternack can also expertly build your custom cable assemblies for you and ship same-day.

Electrical Specifications

Description	Minimum	Typical	Maximum	Units
Frequency Range	DC		4	GHz
VSWR			1.3:1	
Operating Voltage (AC)			335	Vrms
Dielectric Withstanding Voltage (AC)			800	Vrms
Inner Conductor DC Resistance			6	mOhms
Outer Conductor DC Resistance			2.5	mOhms
Insulation Resistance	1,000			MOhms

Mechanical Specifications

Size	
Length	0.89 in [22.61 mm]
Width/Dia.	0.37 in [9.40 mm]
Height	0.433 in [11 mm]
Weight	0.005 lbs [2.27 g]

Click the following link (or enter part number in "SEARCH" on website) to obtain additional part information including price, inventory and certifications: FAKRA Plug Connector Crimp/Solder Attachment for RG174, RG316, RG188, .100 inch, PE-B100, PE-C100, LMR-100, Black Color PE45404A

Pasternack Enterprises, Inc. • P.O. Box 16759, Irvine, CA 92623
Phone: (866) 727-8376 or (949) 261-1920 • **Fax:** (949) 261-7451
Sales@Pasternack.com • Techsupport@Pasternack.com

© 2019 Pasternack Enterprises All Rights Reserved

FAKRA Plug Connector Crimp/Solder Attachment for RG174, RG316, RG188, .100 inch, PE-B100, PE-C100, LMR-100, Black Color

Material Specifications

Description	Material	Plating
Contact	Phosphor Bronze	Gold
Insulation	PTFE	
Outer Conductor	Brass	Nickel
Body	Plastic	

Environmental Specifications

Temperature

Operating Range -40 to +85 deg C

Compliance Certifications (see product page for current document)

Plotted and Other Data

Notes:

Click the following link (or enter part number in “SEARCH” on website) to obtain additional part information including price, inventory and certifications: FAKRA Plug Connector Crimp/Solder Attachment for RG174, RG316, RG188, .100 inch, PE-B100, PE-C100, LMR-100, Black Color PE45404A

Pasternack Enterprises, Inc. • P.O. Box 16759, Irvine, CA 92623
Phone: (866) 727-8376 or (949) 261-1920 • **Fax:** (949) 261-7451
Sales@Pasternack.com • Techsupport@Pasternack.com

© 2019 Pasternack Enterprises All Rights Reserved

FAKRA Plug Connector Crimp/Solder Attachment for RG174, RG316, RG188, .100 inch, PE-B100, PE-C100, LMR-100, Black Color

Assembly Instruction

*

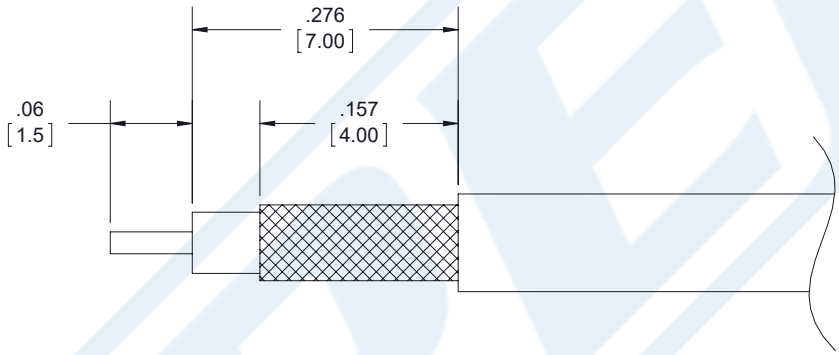

ASSEMBLY PROCEDURES

1. STRIP CABLE TO THE DIMENSIONS SHOWN, DO NOT NICK CENTER CONDUCTOR OR BRAID.
2. PUSH CENTER CONDUCTOR FULLY INTO CONTACT AND SOLDER, REMOVE ANY EXCESS SOLDER.
3. FLARE BRAID AND INSERT CONTACT INTO THE BODY UNTIL IT SEATS.
4. SLIDE FERRULE OVER BRAID AND CRIMP WITH CRIMP TOOL.

CRIMP SIZE REQUIRED

- CONTACT: SOLDER.
- FERRULE: .128 HEX CRIMP TOOL.

Click the following link (or enter part number in “SEARCH” on website) to obtain additional part information including price, inventory and certifications: FAKRA Plug Connector Crimp/Solder Attachment for RG174, RG316, RG188, .100 inch, PE-B100, PE-C100, LMR-100, Black Color PE45404A

Pasternack Enterprises, Inc. • P.O. Box 16759, Irvine, CA 92623
Phone: (866) 727-8376 or (949) 261-1920 • **Fax:** (949) 261-7451
Sales@Pasternack.com • Techsupport@Pasternack.com

© 2019 Pasternack Enterprises All Rights Reserved

FAKRA Plug Connector Crimp/Solder Attachment for RG174, RG316, RG188, .100 inch, PE-B100, PE-C100, LMR-100, Black Color

RF Connectors
Technical Data Sheet

PE45404A

FAKRA Plug Connector Crimp/Solder Attachment for RG174, RG316, RG188, .100 inch, PE-B100, PE-C100, LMR-100, Black Color from Pasternack Enterprises has same day shipment for domestic and International orders. Our RF, microwave and millimeter wave products maintain a 99.4% availability and are part of the broadest selection in the industry.

Click the following link (or enter part number in “SEARCH” on website) to obtain additional part information including price, inventory and certifications: FAKRA Plug Connector Crimp/Solder Attachment for RG174, RG316, RG188, .100 inch, PE-B100, PE-C100, LMR-100, Black Color PE45404A

URL: https://www.pasternack.com/fakra-plug-rg174-rg316-.100-pe-b100-pe-c100-connector-pe45404a-p.aspx

The information contained in this document is accurate to the best of our knowledge and representative of the part described herein. It may be necessary to make modifications to the part and/or the documentation of the part, in order to implement improvements. Pasternack reserves the right to make such changes as required. Unless otherwise stated, all specifications are nominal. Pasternack does not make any representation or warranty regarding the suitability of the part described herein for any particular purpose, and Pasternack does not assume any liability arising out of the use of any part or documentation.

Pasternack Enterprises, Inc. • P.O. Box 16759, Irvine, CA 92623
Phone: (866) 727-8376 or (949) 261-1920 • **Fax:** (949) 261-7451
Sales@Pasternack.com • Techsupport@Pasternack.com

© 2019 Pasternack Enterprises All Rights Reserved

PE45404A CAD Drawing

FAKRA Plug Connector Crimp/Solder Attachment for RG174, RG316, RG188, .100 inch, PE-B100, PE-C100, LMR-100, Black Color

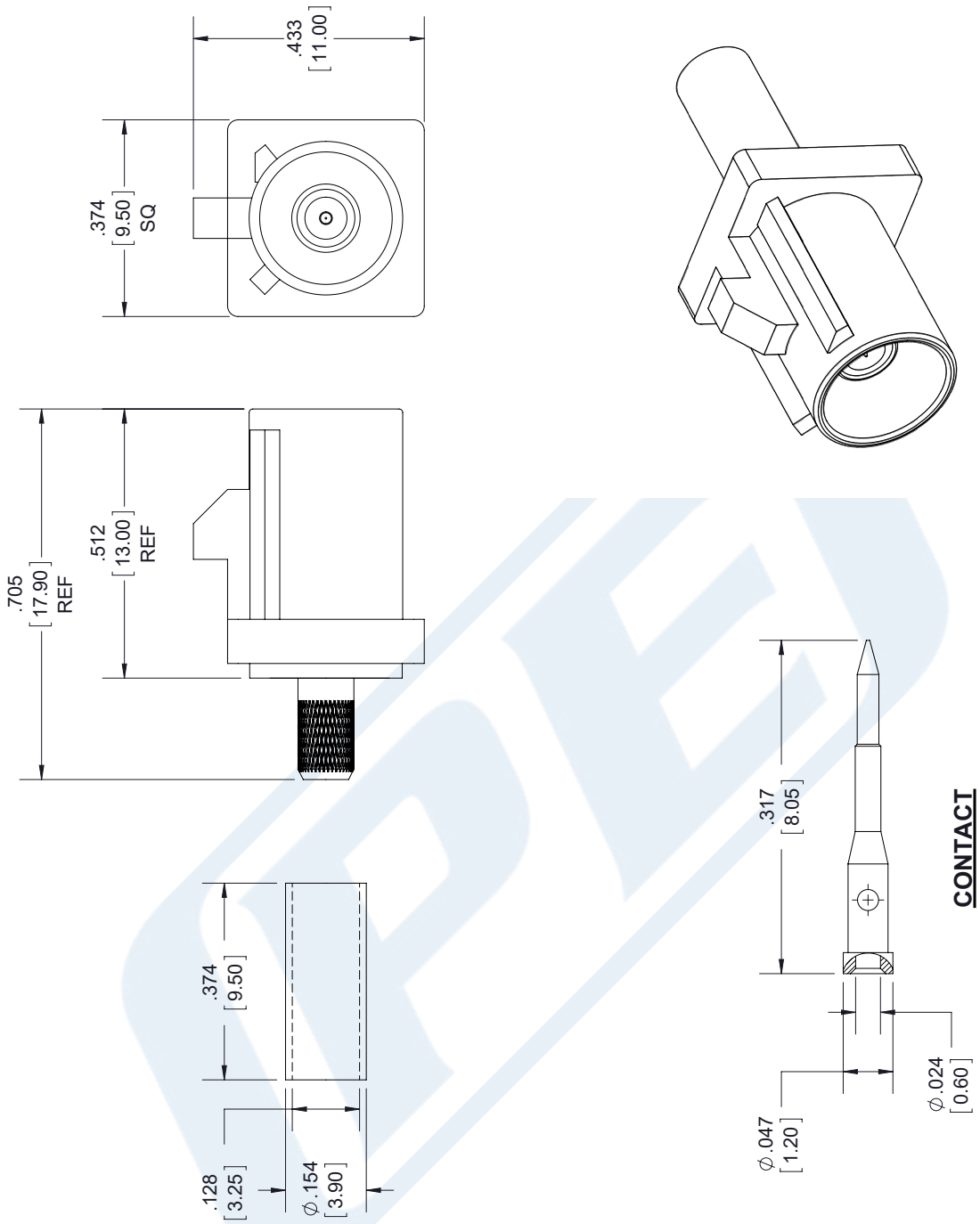

FAKRA CONFIGURATION

CODING	JACK	COLOR	APPLICATION
A		BLACK	RADIO WITH PHANTOM SUPPLY
B		WHITE	RADIO WITHOUT PHANTOM SUPPLY
C		BLUE	GPS: TELEMATICS OR NAVIGATION
D		BORDEAUX	GSM: CELLULAR PHONE
H		VIOLET	GPS: TELEMATICS AND NAVIGATION
I		BEIGE	BLUETOOTH
K		CURRY	RADIO WITH IF OUTPUT (ANTENNA DIVERSITY)
Z		WATER BLUE	NEUTRAL CODING

STANDARD TOLERANCES
.X ±0.2
.XX ±0.01
.XXX ±0.005

*STANDARD TOLERANCES APPLY ONLY TO DIMENSIONS IN INCHES

NOTES:
1. UNLESS OTHERWISE SPECIFIED ALL DIMENSIONS ARE NOMINAL.
2. ALL SPECIFICATIONS ARE SUBJECT TO CHANGE WITHOUT NOTICE AT ANY TIME
3. DIMENSIONS ARE IN INCHES [mm].

DWG TITLE PE45404A

CAD FILE 082917 | SCALE N/A | SIZE A | 9999

CAGE CODE 53919

PASTERNACK® THE ENGINEER'S RF SOURCE
Pasternack Enterprises, Inc.
P.O. Box 16759 | Irvine | CA | 92623
Phone: (949) 261-1920 | **Fax:** (949) 261-7451
Website: www.pasternack.com | **E-Mail:** sales@pasternack.com

© 2019 Pasternack Enterprises All Rights Reserved

Flexible RG188 Coax Cable Single Shielded with White PTFE Jacket

RG188A/U

Configuration

- Flexible Cable
- 1 Shield(s)

Features

- High temperature 50 Ohm data signal transmission
- Teflon taped outer jacket results in a 200 degree C operating temperature
- Stranded center conductor allows cable to be very flexible
- Small diameter is ideal for tight fit applications
- Associated connectors and crimp tools available

Applications

- Ethernet
- Data
- Premise Wiring
- R&D

Description

RG188 coax cable from Pasternack is only one of a large number of radio frequency twinaxial and coaxial cable types specifically stocked to be ready for quick shipment. Pasternack's RG188A/U coax cable is manufactured in a flexible design and has a 50 Ohm impedance. This flexible 50 Ohm coax cable RG188 is constructed with a 0.11 inch diameter and PTFE jacket.

RG188 RG188A/U flexible 50 Ohm coax cable with PTFE jacket is rated for a 3 GHz maximum operating frequency. This 50 Ohm 0.11 inch diameter and flexible coax cable is built with a shield count of 1.

Pasternack's RG188 coax is constructed with PTFE dielectric and a maximum operating temperature of 250 degrees C. RG188 coax cable specs for this wire properties can be found on its RF coax cable RG-188 datasheet PDF specifications above.

RG188 cable is part of more than one million RF, microwave and millimeter wave parts in stock at Pasternack. This RG-188 coax cable is ready to buy and can be shipped worldwide. Pasternack also maintains a wide selection of other radio frequency twinaxial and coaxial cable types that ship same-day from our warehouse as with the rest of our other RF/microwave and millimeter wave components.

Electrical Specifications

Description	Minimum	Typical	Maximum	Units
Frequency Range	DC		3	GHz
Impedance		50		Ohms
Velocity of Propagation		70		% of c
Time Delay		1.45 [4.76]		ns/ft [ns/m]
Dielectric Withstanding Voltage (AC)			2,000	Vrms
Inner Conductor DC Resistance			84.1	Ohms/1000ft
Nominal Capacitance			29.3 [96.13]	pF/ft [pF/m]
Power@ 1GHz			160	Watts

Performance by Frequency Band

Description	F1	F2	F3	F4	F5	Units
Frequency	400					MHz

© 2023 Infinite Electronics, Inc. Pasternack is a registered trademark of Infinite Electronics, Inc.
+1 (866) 558-2786 | sales@pasternack.com | pasternack.com

Flexible RG188 Coax Cable Single Shielded with White PTFE Jacket

RG188A/U

Performance by Frequency Band

Description	F1	F2	F3	F4	F5	Units
Attenuation, Typ	20					dB/100ft
	65.62					dB/100m

Electrical Specification Notes:
Static Bending Radius: One Time: 0.52 inch, repeated: 1.03

Mechanical Specifications

Diameter	0.11 in [2.79 mm}
Weight	0.01 lbs/ft [0.01 kg/m]

Construction Specifications

Description	Material and Plating	Diameter
Inner Conductor	Copper Clad Steel, Silver, 7 Strands	0.02 in [0.51 mm]
Conductor Type	Stranded	
Dielectric	PTFE	0.06 in [1.52 mm]
First Shield	Silver Plated Copper Braid	0.081 in [2.06 mm]
	95.2% coverage	
Jacket	PTFE, White	0.11 in [2.79 mm]

Environmental Specifications

Temperature

Operating Range	-55 to 200 deg C

Compliance Certifications (see product page for current document)

Plotted and Other Data

Notes:

© 2023 Infinite Electronics, Inc. Pasternack is a registered trademark of Infinite Electronics, Inc.
+1 (866) 558-2786 | sales@pasternack.com | pasternack.com

Flexible RG188 Coax Cable Single Shielded with White PTFE Jacket

RG188A/U

Flexible RG188 Coax Cable Single Shielded with White PTFE Jacket from Pasternack Enterprises has same day shipment for domestic and International orders. Our RF, microwave and millimeter wave products maintain a 99.4% availability and are part of the broadest selection in the industry.

Click the following link (or enter part number in "SEARCH" on website) to obtain additional part information including price, inventory and certifications: Flexible RG188 Coax Cable Single Shielded with White PTFE Jacket RG188A/U

URL: https://www.pasternack.com/50-ohm-flexible-rg188au-ptfe-jacket-silver-plated-copper-braid-outer-conductor-single-shielded-white-rg188a-u-p.aspx

The information contained within this document is accurate to the best of our knowledge and representative of the part described herein. It may be necessary to make modifications to the part and/or the documentation of the part in order to impliment improvements. Pasternack Enterprises reserves the right to make such changes as required. Unless otherwise stated, all specifications are nominal. Pasternack Enterprises does not make any representation or warranty regarding the suitability of the part described herein for any particular purpose, and Pasternack Enterprises does not assume liability arising out of the use of any part or document.

© 2023 Infinite Electronics, Inc. Pasternack is a registered trademark of Infinite Electronics, Inc.

RG188A/U CAD Drawing

Flexible RG188 Coax Cable Single Shielded with White PTFE Jacket

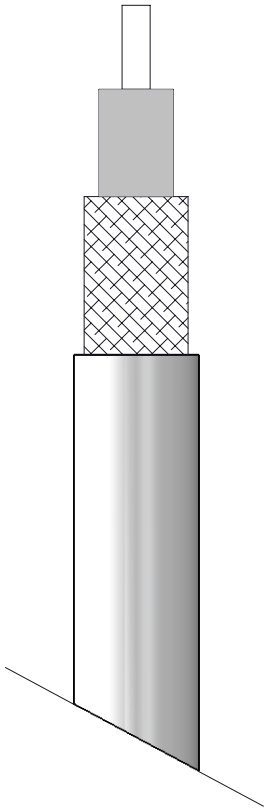

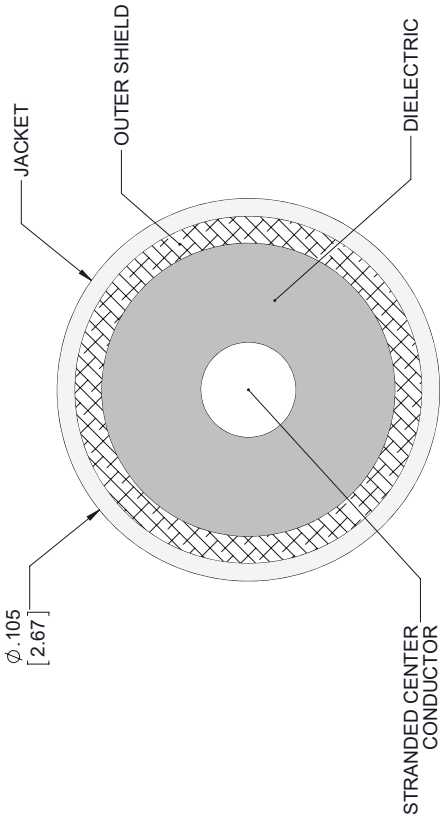

SECTION VIEW

STANDARD TOLERANCES	
.X	±0.2
.XX	±0.01
.XXX	±0.005

*STANDARD TOLERANCES APPLY ONLY TO DIMENSIONS IN INCHES

NOTES:
1. UNLESS OTHERWISE SPECIFIED ALL DIMENSIONS ARE NOMINAL.
2. ALL SPECIFICATIONS ARE SUBJECT TO CHANGE WITHOUT NOTICE AT ANY TIME.
3. DIMENSIONS ARE IN INCHES [mm].

DWG TITLE
RG188A/U

CAD FILE 091817 | SCALE N/A | SIZE A | 7361

CAGE CODE 53919

PASTERNACK®
THE ENGINEER'S RF SOURCE
Pasternack Enterprises, Inc.
P.O. Box 16759 | Irvine | CA | 92623
Phone: (949) 261-1920 | **Fax:** (949) 261-7451
Website: www.pasternack.com | **E-Mail:** sales@pasternack.com

© 2023 Infinite Electronics, Inc. Pasternack is a registered trademark of Infinite Electronics, Inc.