PASTERNACK®
THE ENGINEER'S RF SOURCE

10-32 Female Connector Crimp/Solder Attachment for RG188-DS, RG316-DS

TECHNICAL DATA SHEET PE45171

Configuration

Connector	10-32 Female
Connector Specification	MIL-C-39012
Connector Interface Type	RG188-DS, RG316-DS
Attachment Method (Shield/Contact)	Crimp/Solder
Body Style	Straight

Electrical Specifications

Impedance	50 Ohms

Mechanical Specifications

Temperature

Operating Range	-65 to +165 deg C

Size

Length	1.2 in [30.48 mm]
Width/Dia.	0.25 in [6.35 mm]
Weight	0.011 lbs [4.99 g]

Connector

Type	10-32 Female
Contact Material and Plating	Gold
Contact Plating Specification	MIL-G-45204
Body Material and Plating	Brass, Nickel
Dielectric Type	Teflon

Compliance Certifications (visit www.Pasternack.com for current document)

RoHS Compliant	
REACH Compliant	06/18/2012

Click the following link (or enter part number in "SEARCH" on website) to obtain additional part information including price, inventory and certifications: 10-32 Female Connector Crimp/Solder Attachment for RG188-DS, RG316-DS PE45171

Pasternack Enterprises, Inc. • P.O. Box 16759, Irvine, CA 92623
Phone: (866) 727-8376 or (949) 261-1920 • **Fax:** (949) 261-7451
Sales@Pasternack.com • Techsupport@Pasternack.com

© 2015 Pasternack Enterprises All Rights Reserved

10-32 Female Connector Crimp/Solder Attachment for RG188-DS, RG316-DS

Plotted and Other Data

Notes:

- Values at +25 °C, sea level

10-32 Female Connector Crimp/Solder Attachment for RG188-DS, RG316-DS from Pasternack Enterprises has same day shipment for domestic and International orders. Our RF, microwave and millimeter wave products maintain a 99% availability and are part of the broadest selection in the industry.

Click the following link (or enter part number in "SEARCH" on website) to obtain additional part information including price, inventory and certifications: 10-32 Female Connector Crimp/Solder Attachment for RG188-DS, RG316-DS PE45171

URL: http://www.pasternack.com/10-32-female-rg188-ds-rg316-ds-connector-pe45171-p.aspx

The information contained in this document is accurate to the best of our knowledge and representative of the part described herein. It may be necessary to make modifications to the part and/or the documentation of the part, in order to implement improvements. Pasternack reserves the right to make such changes as required. Unless otherwise stated, all specifications are nominal. Pasternack does not make any representation or warranty regarding the suitability of the part described herein for any particular purpose, and Pasternack does not assume any liability arising out of the use of any part or documentation.

Pasternack Enterprises, Inc. • P.O. Box 16759, Irvine, CA 92623
Phone: (866) 727-8376 or (949) 261-1920 • **Fax:** (949) 261-7451
Sales@Pasternack.com • Techsupport@Pasternack.com

© 2015 Pasternack Enterprises All Rights Reserved

PE45171 CAD Drawing

10-32 Female Connector Crimp/Solder Attachment for RG188-DS, RG316-DS

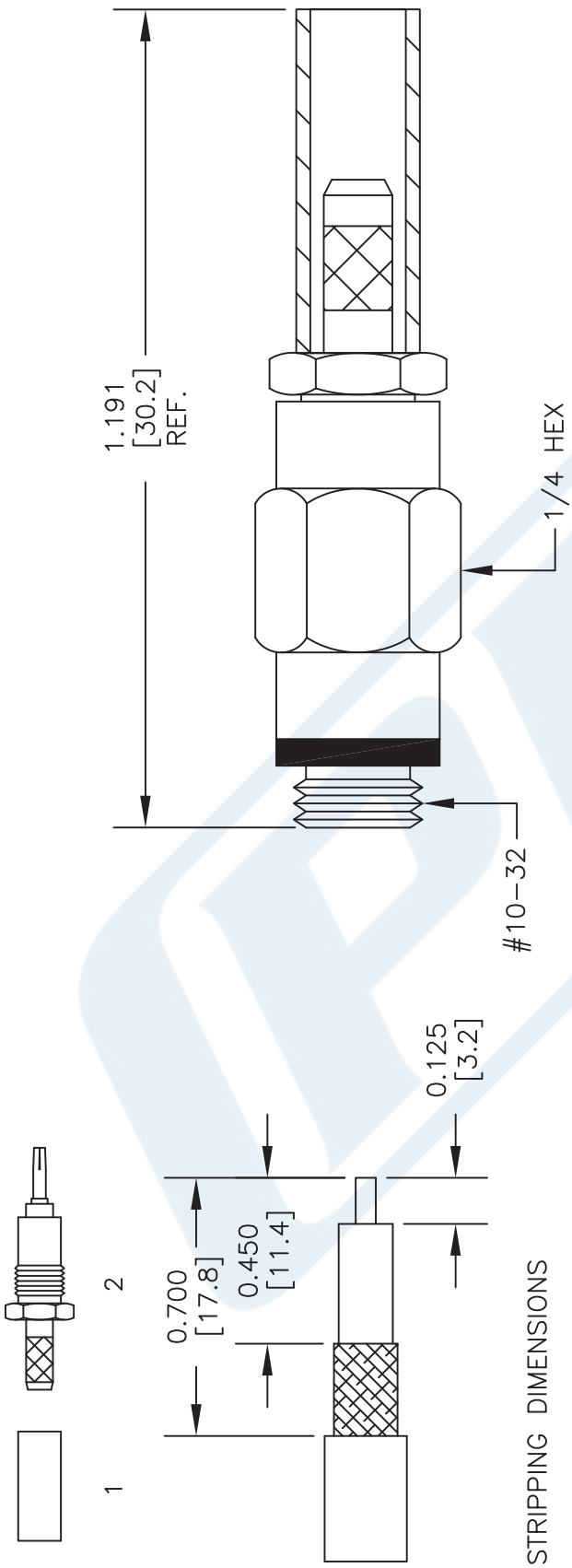

STRIPPING DIMENSIONS

ASSEMBLY PROCEDURES

1. STRIP CABLE AS SHOWN & SLIDE FERRULE (1) ONTO CABLE. TIN CENTER CONDUCTOR.
2. ADD EXTENSION (2) BY SLIDING EXTENSION BETWEEN BRAID & DIELECTRIC. SLIDE FERRULE (1) OVER BRAID & CRIMP.
3. SOLDER CENTER CONDUCTOR THROUGH HOLE IN CONTACT. SLIDE ASSEMBLY INTO BODY & TIGHTEN.

CRIMP SIZE REQUIRED

FERRULE: .128" HEX CRIMP TOOL

NOTES:
1. UNLESS OTHERWISE SPECIFIED ALL DIMENSIONS ARE NOMINAL.
2. ALL SPECIFICATIONS ARE SUBJECT TO CHANGE WITHOUT NOTICE AT ANY TIME.
3. DIMENSIONS ARE IN INCHES [mm].
4. FITS MIL-C-17 AND EQUIVALENT CABLES.

DWG TITLE
PE45171

FSCM NO. 53919

CAD FILE 031815 | SCALE N/A | SIZE A | 2233

PASTERNACK®
THE ENGINEER'S RF SOURCE
Pasternack Enterprises, Inc.
P.O. Box 16759 | Irvine | CA | 92623
Phone: (949) 261-1920 | **Fax:** (949) 261-7451
Website: www.pasternack.com | **E-Mail:** sales@pasternack.com

© 2015 Pasternack Enterprises All Rights Reserved

PASTERNACK
an INFINITE brand

SMA Male Connector Crimp/Solder Attachment for RG188-DS, RG316-DS

RF Connectors
Technical Data Sheet

PE4401

Configuration

- SMA Male Connector
- MIL-STD-348A
- 50 Ohms
- Straight Body Geometry
- Connector Interface Types: RG188-DS, RG316-DS
- 5/16 inch Hex

Features

- Max. Operating Frequency 12.4 GHz
- Excellent VSWR of 1.21:1
- Gold Plated Brass Contact
- 30 µin minimum contact plating

Applications

- General Purpose Test
- Custom Cable Assemblies

Description

Pasternack's PE4401 SMA male connector with crimp/solder attachment for RG188-DS and RG316-DS is part of our full line of RF components available for same-day shipping. Our SMA male connector operates up to a maximum frequency of 12.4 GHz and offers excellent VSWR of 1.21:1.

Our SMA male connector PE4401 datasheet specifications and drawing with dimensions are shown below in this PDF. Pasternack's broad catalog of RF, microwave and millimeter wave connectors allows designers to configure and customize their signal connections however they like. Whether the need is to provide an I/O for a board design, or simply create a custom cable assembly configuration, Pasternack has the right connector for the job. Pasternack can also expertly build your custom cable assemblies for you and ship same-day.

Electrical Specifications

Description	Minimum	Typical	Maximum	Units
Frequency Range	DC		12.4	GHz
VSWR			1.21:1	
Operating Voltage (AC)			335	Vrms

Mechanical Specifications

Size	
Length	0.941 in [23.9 mm]
Width/Dia.	0.315 in [8.00 mm]
Weight	0.013 lbs [5.9 g]
Mating Torque	3 to 5 in-lbs [0.34 to 0.57 Nm]

Click the following link (or enter part number in "SEARCH" on website) to obtain additional part information including price, inventory and certifications: SMA Male Connector Crimp/Solder Attachment for RG188-DS, RG316-DS PE4401

Pasternack Enterprises, Inc. • P.O. Box 16759, Irvine, CA 92623
Phone: (866) 727-8376 or (949) 261-1920 • **Fax:** (949) 261-7451
Sales@Pasternack.com • Techsupport@Pasternack.com

© 2020 Pasternack Enterprises All Rights Reserved

SMA Male Connector Crimp/Solder Attachment for RG188-DS, RG316-DS

RF Connectors
Technical Data Sheet

PE4401

Material Specifications

Description	Material	Plating
Contact	Brass	Gold 30 µin minimum
Insulation	PTFE	
Body	Brass	Nickel 100 µin minimum
Coupling Nut	Brass	Nickel 100 µin minimum
Crimp Sleeve	Brass	Nickel

Environmental Specifications

Temperature

Operating Range -65 to +165 deg C

Compliance Certifications (see product page for current document)

Plotted and Other Data

Notes:

SMA Male Connector Crimp/Solder Attachment for RG188-DS, RG316-DS from Pasternack Enterprises has same day shipment for domestic and International orders. Our RF, microwave and millimeter wave products maintain a 99.4% availability and are part of the broadest selection in the industry.

Click the following link (or enter part number in “SEARCH” on website) to obtain additional part information including price, inventory and certifications: SMA Male Connector Crimp/Solder Attachment for RG188-DS, RG316-DS PE4401

URL: https://www.pasternack.com/sma-male-rg188-ds-rg316-ds-connector-pe4401-p.aspx

The information contained in this document is accurate to the best of our knowledge and representative of the part described herein. It may be necessary to make modifications to the part and/or the documentation of the part, in order to implement improvements. Pasternack reserves the right to make such changes as required. Unless otherwise stated, all specifications are nominal. Pasternack does not make any representation or warranty regarding the suitability of the part described herein for any particular purpose, and Pasternack does not assume any liability arising out of the use of any part or documentation.

Pasternack Enterprises, Inc. • P.O. Box 16759, Irvine, CA 92623
Phone: (866) 727-8376 or (949) 261-1920 • **Fax:** (949) 261-7451
Sales@Pasternack.com • Techsupport@Pasternack.com

© 2020 Pasternack Enterprises All Rights Reserved

PE4401 CAD Drawing

SMA Male Connector Crimp/Solder Attachment for RG188-DS, RG316-DS

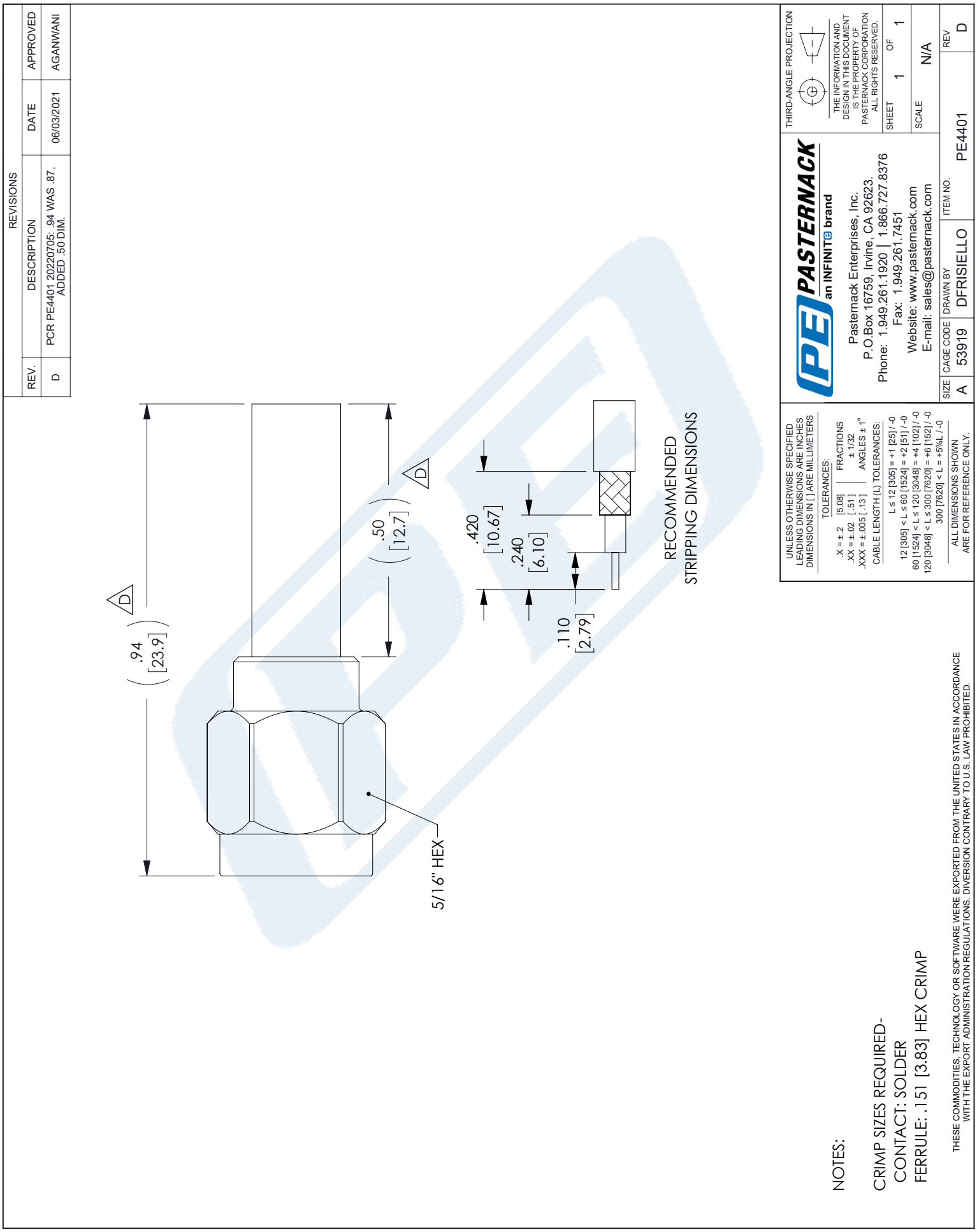

© 2020 Pasternack Enterprises All Rights Reserved

Flexible RG316-DS Coax Cable Double Shielded with Tan FEP Jacket

RF Cables
Technical Data Sheet

RG316-DS

Configuration

- Flexible Cable
- 2 Shield(s)

Electrical Specifications

Description	Minimum	Typical	Maximum	Units
Frequency Range	DC		3	GHz
Impedance		50		Ohms
Velocity of Propagation		69.5		%
Shielding Effectiveness	85			dB
Operating Voltage (AC)			1,200	Vrms
Inner Conductor DC Resistance			83.82	Ohms/1000ft
Outer Conductor DC Resistance			5.33	Ohms/1000ft
Nominal Capacitance		28.96 [95.01]		pF/ft [pF/m]
Insulation Resistance	304.8			MOhms/1000ft

Performance by Frequency Band

Description	F1	F2	F3	F4	F5	Units
Frequency	0.1	0.4	1	2	3	GHz
Attenuation, Max	10.97	20.97	37.95	45.05	57.94	dB/100ft
	35.99	68.8	124.51	147.8	190.09	dB/100m
Attenuation, Typ	8.29	17.5	29	39.41	53.55	dB/100ft
	27.2	57.41	95.14	129.3	175.69	dB/100m
Input Power (CW), Max	375	185	120	85	65	Watts

Mechanical Specifications

Diameter	0.114 in [2.9 mm]
Weight	0.015 lbs/ft [0.02 Kg/m]
Min. Bend Radius (Installation)	0.59 in [14.99 mm]
Min. Bend Radius (Repeated)	1.57 in [39.88 mm]

Click the following link (or enter part number in “SEARCH” on website) to obtain additional part information including price, inventory and certifications: Flexible RG316-DS Coax Cable Double Shielded with Tan FEP Jacket RG316-DS

Pasternack Enterprises, Inc. • P.O. Box 16759, Irvine, CA 92623
Phone: (866) 727-8376 or (949) 261-1920 • **Fax:** (949) 261-7451
Sales@Pasternack.com • Techsupport@Pasternack.com

© 2020 Pasternack Enterprises All Rights Reserved

Flexible RG316-DS Coax Cable Double Shielded with Tan FEP Jacket

Construction Specifications

Description	Material and Plating	Diameter
Inner Conductor	Copper Clad Steel, Silver, 7 Strands	0.02 in 0.51 mm
Conductor Type	Stranded	
Dielectric	PTFE	0.06 in [1.52 mm]
First Shield	Silver Plated Copper Braid	
Second Shield	Silver Plated Copper Braid	0.094 in 2.39 mm
Jacket	FEP, Tan	0.114 in [2.9 mm]

Environmental Specifications

Temperature

Operating Range	-55 to +200 deg C
Storage Range	0 to +40 deg C

Compliance Certifications (see product page for current document)

Plotted and Other Data

Notes:

Flexible RG316-DS Coax Cable Double Shielded with Tan FEP Jacket from Pasternack Enterprises has same day shipment for domestic and International orders. Our RF, microwave and millimeter wave products maintain a 99.4% availability and are part of the broadest selection in the industry.

Click the following link (or enter part number in “SEARCH” on website) to obtain additional part information including price, inventory and certifications: Flexible RG316-DS Coax Cable Double Shielded with Tan FEP Jacket RG316-DS

URL: https://www.pasternack.com/flexible-0.114-rg316-ds-50-ohm-coax-cable-fep-jacket-rg316-ds-p.aspx

The information contained in this document is accurate to the best of our knowledge and representative of the part described herein. It may be necessary to make modifications to the part and/or the documentation of the part, in order to implement improvements. Pasternack reserves the right to make such changes as required. Unless otherwise stated, all specifications are nominal. Pasternack does not make any representation or warranty regarding the suitability of the part described herein for any particular purpose, and Pasternack does not assume any liability arising out of the use of any part or documentation.

Pasternack Enterprises, Inc. • P.O. Box 16759, Irvine, CA 92623
Phone: (866) 727-8376 or (949) 261-1920 • **Fax:** (949) 261-7451
Sales@Pasternack.com • Techsupport@Pasternack.com

© 2020 Pasternack Enterprises All Rights Reserved

RG316-DS CAD Drawing

Flexible RG316-DS Coax Cable Double Shielded with Tan FEP Jacket

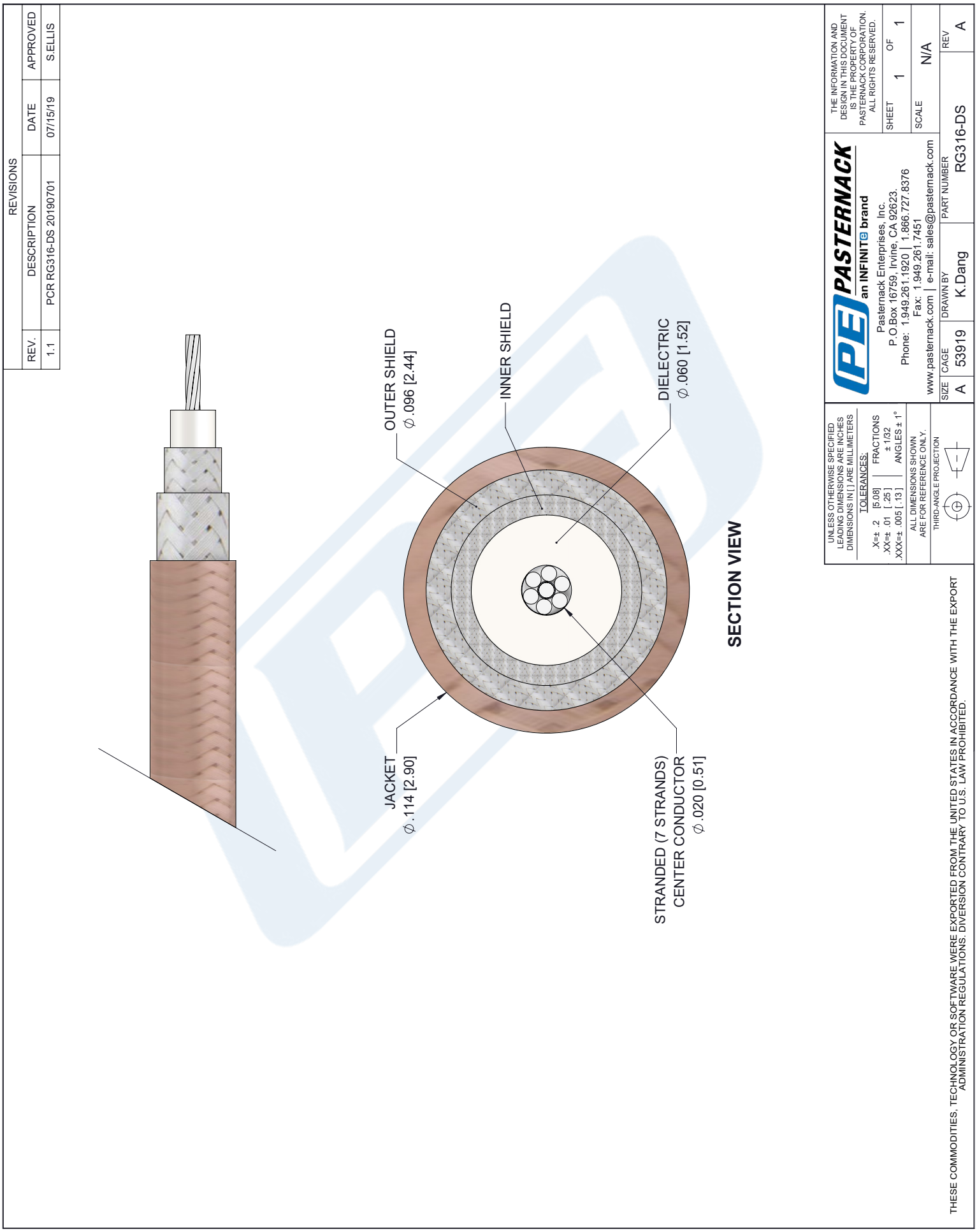

© 2020 Pasternack Enterprises All Rights Reserved