PASTERNACK
an INFINITE brand

Banana Plug Connector Crimp/Solder Attachment for RG55, RG142, RG223, RG400

RF Connectors
Technical Data Sheet

PE4089

Configuration

- Banana Plug Connector
- Straight Body Geometry
- Connector Interface Types: RG55, RG142, RG223, RG400

Applications

- General Purpose Test
- Custom Cable Assemblies

Description

Pasternack's PE4089 Banana plug connector with crimp/solder attachment for RG55, RG142, RG223 and RG400 is part of our full line of RF components available for same-day shipping.

Our Banana plug connector PE4089 datasheet specifications and drawing with dimensions are shown below in this PDF. Pasternack's broad catalog of RF, microwave and millimeter wave connectors allows designers to configure and customize their signal connections however they like. Whether the need is to provide an I/O for a board design, or simply create a custom cable assembly configuration, Pasternack has the right connector for the job. Pasternack can also expertly build your custom cable assemblies for you and ship same-day.

Mechanical Specifications

Weight 0.048 lbs [21.77 g]

Material Specifications

Description	Material	Plating
Body	Brass	Nickel

Environmental Specifications

Compliance Certifications (see product page for current document)

Plotted and Other Data

Notes:

Click the following link (or enter part number in "SEARCH" on website) to obtain additional part information including price, inventory and certifications: Banana Plug Connector Crimp/Solder Attachment for RG55, RG142, RG223, RG400 PE4089

Pasternack Enterprises, Inc. • P.O. Box 16759, Irvine, CA 92623
Phone: (866) 727-8376 or (949) 261-1920 • **Fax:** (949) 261-7451
Sales@Pasternack.com • Techsupport@Pasternack.com

© 2019 Pasternack Enterprises All Rights Reserved

Banana Plug Connector Crimp/Solder Attachment for RG55, RG142, RG223, RG400

RF Connectors
Technical Data Sheet

PE4089

Banana Plug Connector Crimp/Solder Attachment for RG55, RG142, RG223, RG400 from Pasternack Enterprises has same day shipment for domestic and International orders. Our RF, microwave and millimeter wave products maintain a 99.4% availability and are part of the broadest selection in the industry.

Click the following link (or enter part number in "SEARCH" on website) to obtain additional part information including price, inventory and certifications: Banana Plug Connector Crimp/Solder Attachment for RG55, RG142, RG223, RG400 PE4089

URL: https://www.pasternack.com/banana-plug-rg55-rg142-rg223-rg400-connector-pe4089-p.aspx

The information contained in this document is accurate to the best of our knowledge and representative of the part described herein. It may be necessary to make modifications to the part and/or the documentation of the part, in order to implement improvements. Pasternack reserves the right to make such changes as required. Unless otherwise stated, all specifications are nominal. Pasternack does not make any representation or warranty regarding the suitability of the part described herein for any particular purpose, and Pasternack does not assume any liability arising out of the use of any part or documentation.

Pasternack Enterprises, Inc. • P.O. Box 16759, Irvine, CA 92623
Phone: (866) 727-8376 or (949) 261-1920 • **Fax:** (949) 261-7451
Sales@Pasternack.com • Techsupport@Pasternack.com

© 2019 Pasternack Enterprises All Rights Reserved

PE4089 CAD Drawing

Banana Plug Connector Crimp/Solder Attachment for RG55, RG142, RG223, RG400

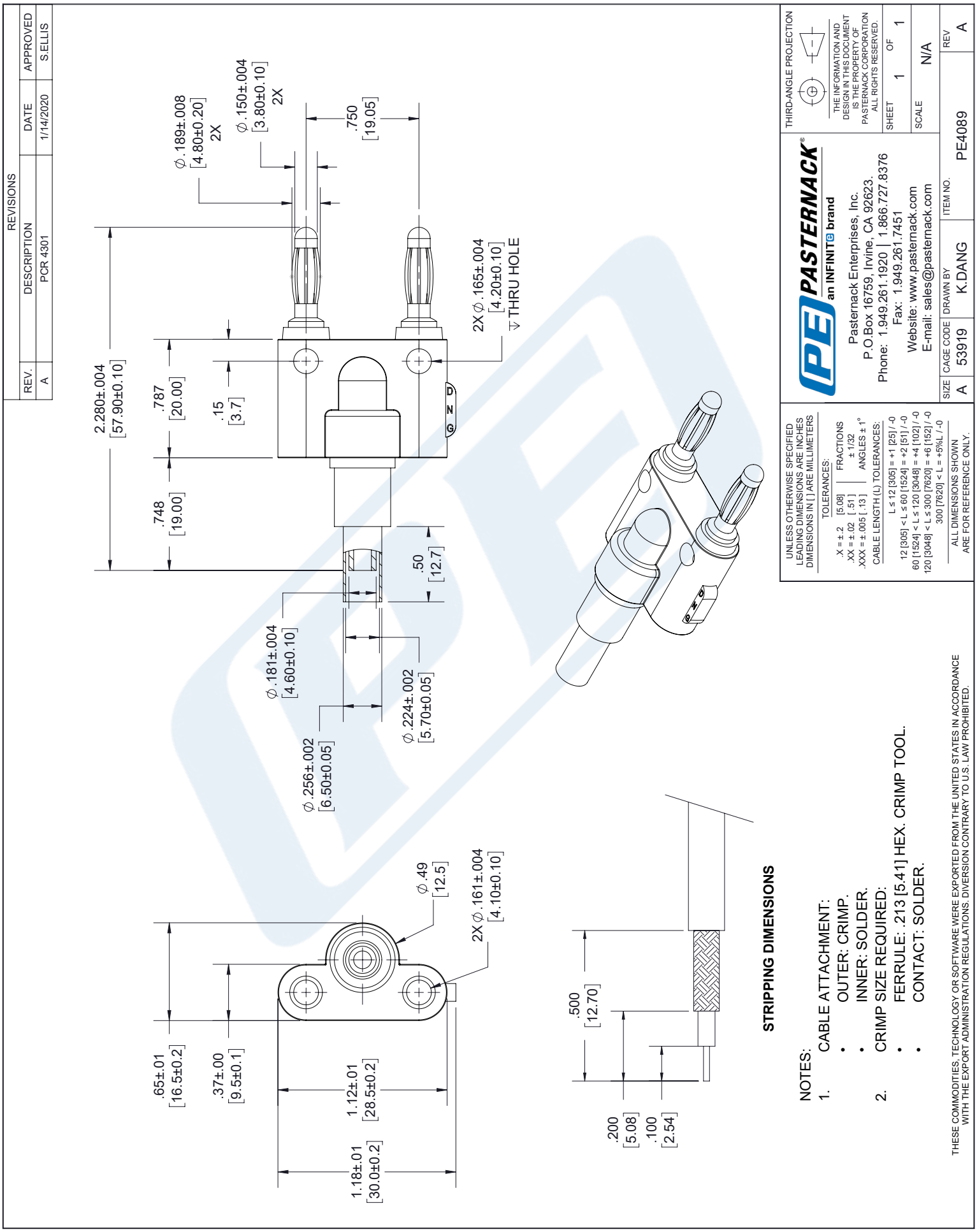

© 2019 Pasternack Enterprises All Rights Reserved

PASTERNACK®
THE ENGINEER'S RF SOURCE

MHV Male Connector Crimp/Solder Attachment for RG55, RG141, RG142, RG223, RG400

TECHNICAL DATA SHEET PE4657

Configuration

Connector	MHV Male
Connector Specification	MIL-STD-348A
Connector Interface Type	RG55, RG141, RG142, RG223, RG400
Attachment Method (Shield/Contact)	Crimp/Solder
Body Style	Straight

Electrical Specifications

Frequency Range	DC to 300 MHz
Impedance	50 Ohms
Maximum Operating Voltage	1,600 Volts

Mechanical Specifications

Temperature

Operating Range	-65 to +165 deg C

Size

Length	1.5 in [38.1 mm]
Width/Dia.	0.57 in [14.48 mm]
Weight	0.034 lbs [15.42 g]

Connector

Type	MHV Male
Contact Material and Plating	Brass, Gold
Contact Plating Specification	30µ in. minimum
Coupling Nut Material and Plating	Brass, Nickel
Coupling Nut Plating Specification	100µ in. minimum
Body Material and Plating	Brass, Nickel
Body Plating Specification	100µ in. minimum
Dielectric Type	Teflon

Compliance Certifications (visit www.Pasternack.com for current document)

RoHS Compliant

Click the following link (or enter part number in "SEARCH" on website) to obtain additional part information including price, inventory and certifications: MHV Male Connector Crimp/Solder Attachment for RG55, RG141, RG142, RG223, RG400 PE4657

Pasternack Enterprises, Inc. • P.O. Box 16759, Irvine, CA 92623
Phone: (866) 727-8376 or (949) 261-1920 • **Fax:** (949) 261-7451
Sales@Pasternack.com • Techsupport@Pasternack.com

© 2014 Pasternack Enterprises All Rights Reserved

MHV Male Connector Crimp/Solder Attachment for RG55, RG141, RG142, RG223, RG400

Plotted and Other Data

Notes:

- Values at +25 °C, sea level

MHV Male Connector Crimp/Solder Attachment for RG55, RG141, RG142, RG223, RG400 from Pasternack Enterprises has same day shipment for domestic and International orders. Our RF, microwave and millimeter wave products maintain a 99% availability and are part of the broadest selection in the industry.

Click the following link (or enter part number in "SEARCH" on website) to obtain additional part information including price, inventory and certifications: MHV Male Connector Crimp/Solder Attachment for RG55, RG141, RG142, RG223, RG400 PE4657

URL: http://www.pasternack.com/mhv-male-rg55-rg141-rg142-rg223-rg400-connector-pe4657-p.aspx

The information contained in this document is accurate to the best of our knowledge and representative of the part described herein. It may be necessary to make modifications to the part and/or the documentation of the part, in order to implement improvements. Pasternack reserves the right to make such changes as required. Unless otherwise stated, all specifications are nominal. Pasternack does not make any representation or warranty regarding the suitability of the part described herein for any particular purpose, and Pasternack does not assume any liability arising out of the use of any part or documentation.

Pasternack Enterprises, Inc. • P.O. Box 16759, Irvine, CA 92623
Phone: (866) 727-8376 or (949) 261-1920 • **Fax:** (949) 261-7451
Sales@Pasternack.com • Techsupport@Pasternack.com

© 2014 Pasternack Enterprises All Rights Reserved

PE4657 CAD Drawing

MHV Male Connector Crimp/Solder Attachment for RG55, RG141, RG142, RG223, RG400

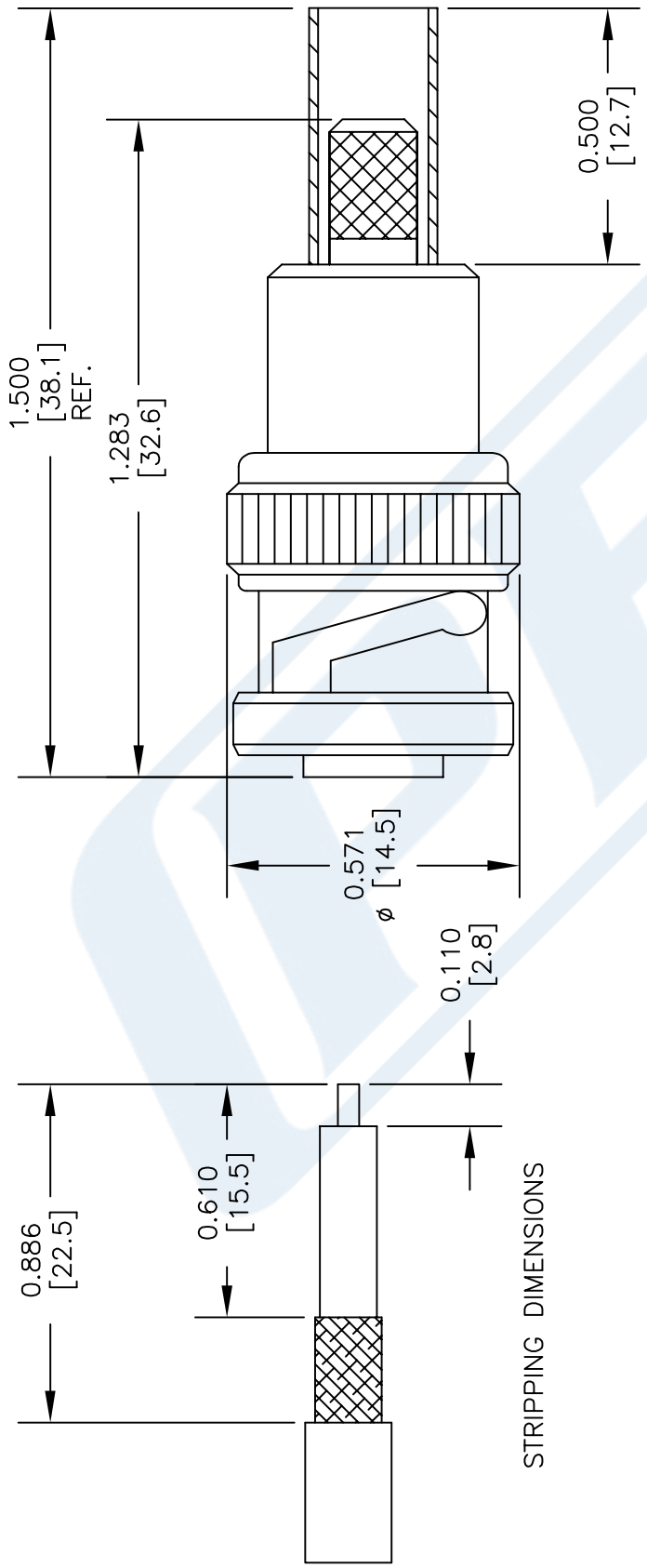

STRIPPING DIMENSIONS

CRIMP SIZE REQUIRED

CONTACT: .079 [2.0] HEX CRIMP TOOL
FERRULE: .213 [5.6] HEX CRIMP TOOL

NOTES:
1. UNLESS OTHERWISE SPECIFIED ALL DIMENSIONS ARE NOMINAL.
2. ALL SPECIFICATIONS ARE SUBJECT TO CHANGE WITHOUT NOTICE AT ANY TIME.
3. DIMENSIONS ARE IN INCHES [mm].

DWG TITLE
PE4657

FSCM NO. 53919

CAD FILE 101514 | SCALE N/A | SIZE A | 150

PASTERNACK THE ENGINEER'S RF SOURCE
Pasternack Enterprises, Inc.
P.O. Box 16759 | Irvine | CA | 92623
Phone: (949) 261-1920 | **Fax:** (949) 261-7451
Website: www.pasternack.com | **E-Mail:** sales@pasternack.com

© 2014 Pasternack Enterprises All Rights Reserved

PASTERNACK
an INFINITE brand

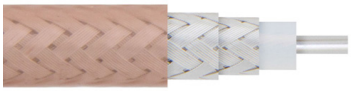

Flexible RG142 Coax Cable Double Shielded with Tan FEP Jacket

RF Cables
Technical Data Sheet

RG142B/U

Configuration

- Flexible Cable
- 2 Shield(s)

Electrical Specifications

Description	Minimum	Typical	Maximum	Units
Frequency Range	DC		8	GHz
Impedance		50		Ohms
Velocity of Propagation		70		%
Shielding Effectiveness	70			dB
Operating Voltage (AC)			1,900	Vrms
Dielectric Withstanding Voltage (DC)			5,000	Vdc
Inner Conductor DC Resistance			65	Ohms/1000ft
Outer Conductor DC Resistance			9	Ohms/1000ft
Nominal Capacitance		96.45 [316.44]		pF/ft [pF/m]
Insulation Resistance	5,000			MOhms/1000ft
Power@ 1GHz			395	Watts

Performance by Frequency Band

Description	F1	F2	F3	F4	F5	Units
Frequency	0.1	0.4	1	3	5	GHz
Attenuation, Typ	3.9	7.9	12.9	23.9	32.1	dB/100ft
	12.8	25.92	42.32	78.41	105.31	dB/100m

Description	F6	F7	F8	F9	F10	Units
Frequency	6	8				GHz
Attenuation, Typ	36.86	44.17				dB/100ft
	120.93	144.91				dB/100m

Mechanical Specifications

Diameter	0.195 in [4.95 mm}
Weight	0.042 lbs/ft [0.06 kg/m]

Click the following link (or enter part number in “SEARCH” on website) to obtain additional part information including price, inventory and certifications: Flexible RG142 Coax Cable Double Shielded with Tan FEP Jacket RG142B/U

Pasternack Enterprises, Inc. • P.O. Box 16759, Irvine, CA 92623
Phone: (866) 727-8376 or (949) 261-1920 • **Fax:** (949) 261-7451
Sales@Pasternack.com • Techsupport@Pasternack.com

© 2020 Pasternack Enterprises All Rights Reserved

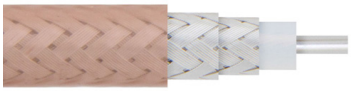

Flexible RG142 Coax Cable Double Shielded with Tan FEP Jacket

Min. Bend Radius (Installation)	0.98 in [24.89 mm]
Min. Bend Radius (Repeated)	1.97 in [50.04 mm]

Construction Specifications

Description	Material and Plating	Diameter
Inner Conductor	Copper Clad Steel, Silver, 1 Strand	0.037 in [0.94 mm]
Conductor Type	Solid	
Dielectric	PTFE	0.116 in [2.95 mm]
First Shield	Silver Plated Copper Braid	[ ]
Second Shield	Silver Plated Copper Braid	0.156 in [3.96 mm]
Jacket	FEP, Tan	0.195 in [4.95 mm]

Environmental Specifications

Temperature

Operating Range	-55 to +200 deg C
Installation Range	-20 to +50 deg C
Storage Range	0 to +40 deg C
Humidity	0 - 80% Relative Humidity

Compliance Certifications (see product page for current document)

Plotted and Other Data

Notes:

Flexible RG142 Coax Cable Double Shielded with Tan FEP Jacket from Pasternack Enterprises has same day shipment for domestic and International orders. Our RF, microwave and millimeter wave products maintain a 99.4% availability and are part of the broadest selection in the industry.

Click the following link (or enter part number in “SEARCH” on website) to obtain additional part information including price, inventory and certifications: Flexible RG142 Coax Cable Double Shielded with Tan FEP Jacket RG142B/U

URL: https://www.pasternack.com/flexible-0.195-rg142-50-ohm-coax-cable-fep-jacket-rg142b-u-p.aspx

Pasternack Enterprises, Inc. • P.O. Box 16759, Irvine, CA 92623
Phone: (866) 727-8376 or (949) 261-1920 • **Fax:** (949) 261-7451
Sales@Pasternack.com • Techsupport@Pasternack.com

© 2020 Pasternack Enterprises All Rights Reserved

RG142B/U CAD Drawing

Flexible RG142 Coax Cable Double Shielded with Tan FEP Jacket

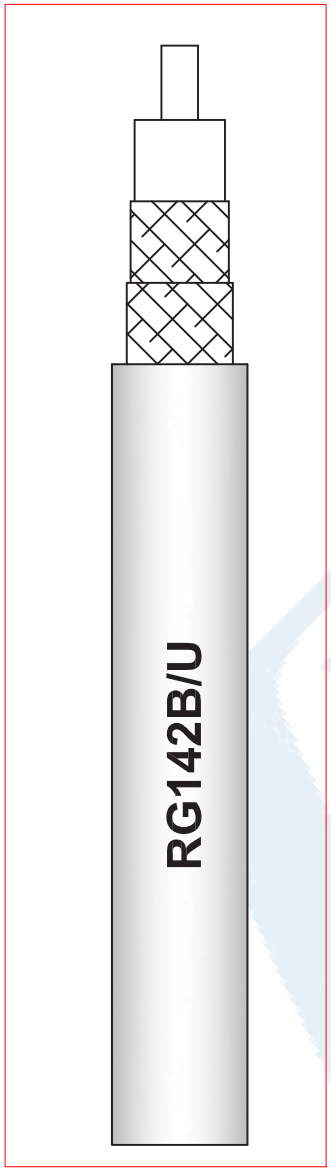

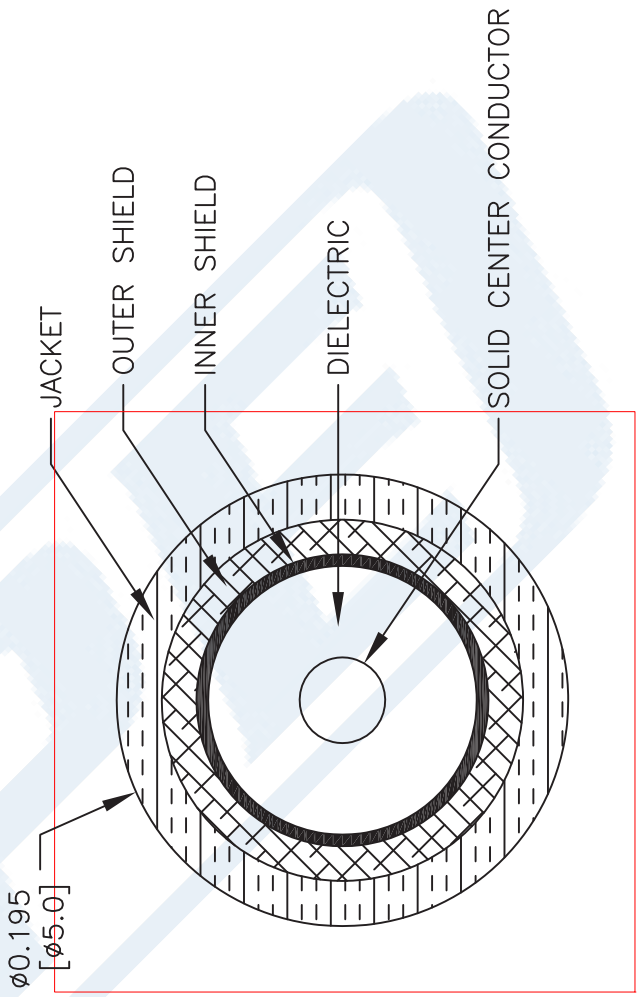

NOTES:
1. UNLESS OTHERWISE SPECIFIED ALL DIMENSIONS ARE NOMINAL.
2. ALL SPECIFICATIONS ARE SUBJECT TO CHANGE WITHOUT NOTICE AT ANY TIME.
3. DIMENSIONS ARE IN INCHES [mm].

DWG TITLE
RG142B/U

FSCM NO. 53919

CAD FILE 111716 | SCALE N/A | SIZE A | 41742

PASTERNACK®
THE ENGINEER'S RF SOURCE
Pasternack Enterprises, Inc.
P.O. Box 16759 | Irvine | CA | 92623
Phone: (949) 261-1920 | **Fax:** (949) 261-7451
Website: www.pasternack.com | **E-Mail:** sales@pasternack.com

© 2020 Pasternack Enterprises All Rights Reserved