PASTERNACK
an INFINITE brand

2.2-5 Male Right Angle Low PIM Connector Solder Attachment for PE-1/4SFHC, SPP-250-LLPL, SPO-250, SPF-250

RF Connectors
Technical Data Sheet

PE45674

Configuration

- 2.2-5 Male Connector
- 50 Ohms
- Right Angle Body Geometry
- Connector Interface Types: PE-1/4SFHC, SPP-250-LL-PL, SPO-250, SPF-250
- Low PIM Design

Features

- Max. Operating Frequency 6 GHz
- Good VSWR of 1.35:1
- PIM levels lower than -160 dBc
- Silver Plated Brass Contact

Applications

- General Purpose Test
- Wireless Communications
- Custom Cable Assemblies
- Low PIM Applications

Description

Pasternack's PE45674 2.2-5 male right angle connector with solder/solder attachment for PE-1/4SFHC, SPP-250-LLPL, SPO-250 and SPF-250 is part of our full line of RF components available for same-day shipping. Our 2.2-5 male connector operates up to a maximum frequency of 6 GHz and offers good VSWR of 1.35:1. The 2.2-5 male connector also has low passive intermodulation of -160 dBc. Its right angle body geometry allows for easier connections in tight spaces.

Our 2.2-5 male right angle connector PE45674 datasheet specifications and drawing with dimensions are shown below in this PDF. Pasternack's broad catalog of RF, microwave and millimeter wave connectors allows designers to configure and customize their signal connections however they like. Whether the need is to provide an I/O for a board design, or simply create a custom cable assembly configuration, Pasternack has the right connector for the job. Pasternack can also expertly build your custom cable assemblies for you and ship same-day.

Electrical Specifications

Description	Minimum	Typical	Maximum	Units
Frequency Range	DC		6	GHz
VSWR			1.35:1	
Passive Intermodulation			-160	dBc
Dielectric Withstanding Voltage (AC)			750	Vrms

Performance by Frequency

Description	F1	F2	F3	F4	F5	Units
Frequency Range	DC to 3	3 to 6				GHz
VSWR, Max	1.25:1	1.35:1				

Click the following link (or enter part number in "SEARCH" on website) to obtain additional part information including price, inventory and certifications: 2.2-5 Male Right Angle Low PIM Connector Solder Attachment for PE-1/4SFHC, SPP-250-LL-PL, SPO-250, SPF-250 PE45674

Pasternack Enterprises, Inc. • P.O. Box 16759, Irvine, CA 92623
Phone: (866) 727-8376 or (949) 261-1920 • **Fax:** (949) 261-7451
Sales@Pasternack.com • Techsupport@Pasternack.com

© 2020 Pasternack Enterprises All Rights Reserved

2.2-5 Male Right Angle Low PIM Connector Solder Attachment for PE-1/4SFHC, SPP-250-LLPL, SPO-250, SPF-250

RF Connectors
Technical Data Sheet

PE45674

Mechanical Specifications

Size

Length	0.98 in [24.89 mm]
Width/Dia.	0.68 in [17.27 mm]
Height	0.68 in [17.27 mm]
Weight	0.05 lbs [22.68 g]

Material Specifications

Description	Material	Plating
Contact	Brass	Silver
Insulation	PTFE	
Body	Brass	Tri-Metal
Coupling Nut	Brass	Tri-Metal
O-Ring	Silicone	

Environmental Specifications

Temperature

Operating Range	-40 to +155 deg C

Compliance Certifications (see product page for current document)

Plotted and Other Data

Notes:

Click the following link (or enter part number in “SEARCH” on website) to obtain additional part information including price, inventory and certifications: 2.2-5 Male Right Angle Low PIM Connector Solder Attachment for PE-1/4SFHC, SPP-250-LL-PL, SPO-250, SPF-250 PE45674

Pasternack Enterprises, Inc. • P.O. Box 16759, Irvine, CA 92623
Phone: (866) 727-8376 or (949) 261-1920 • **Fax:** (949) 261-7451
Sales@Pasternack.com • Techsupport@Pasternack.com

© 2020 Pasternack Enterprises All Rights Reserved

2.2-5 Male Right Angle Low PIM Connector Solder Attachment for PE-1/4SFHC, SPP-250-LLPL, SPO-250, SPF-250

RF Connectors
Technical Data Sheet

PE45674

2.2-5 Male Right Angle Low PIM Connector Solder Attachment for PE-1/4SFHC, SPP-250-LLPL, SPO-250, SPF-250 from Pasternack Enterprises has same day shipment for domestic and International orders. Our RF, microwave and millimeter wave products maintain a 99.4% availability and are part of the broadest selection in the industry.

Click the following link (or enter part number in “SEARCH” on website) to obtain additional part information including price, inventory and certifications: 2.2-5 Male Right Angle Low PIM Connector Solder Attachment for PE-1/4SFHC, SPP-250-LLPL, SPO-250, SPF-250 PE45674

URL: https://www.pasternack.com/2.2-5-male-pe-1-4sfhc-spp-250-llpl-connector-pe45674-p.aspx

The information contained in this document is accurate to the best of our knowledge and representative of the part described herein. It may be necessary to make modifications to the part and/or the documentation of the part, in order to implement improvements. Pasternack reserves the right to make such changes as required. Unless otherwise stated, all specifications are nominal. Pasternack does not make any representation or warranty regarding the suitability of the part described herein for any particular purpose, and Pasternack does not assume any liability arising out of the use of any part or documentation.

Pasternack Enterprises, Inc. • P.O. Box 16759, Irvine, CA 92623
Phone: (866) 727-8376 or (949) 261-1920 • **Fax:** (949) 261-7451
Sales@Pasternack.com • Techsupport@Pasternack.com

© 2020 Pasternack Enterprises All Rights Reserved

PE45674 CAD Drawing

2.2-5 Male Right Angle Low PIM Connector Solder Attachment
for PE-1/4SFHC, SPP-250-LLPL, SPO-250, SPF-250

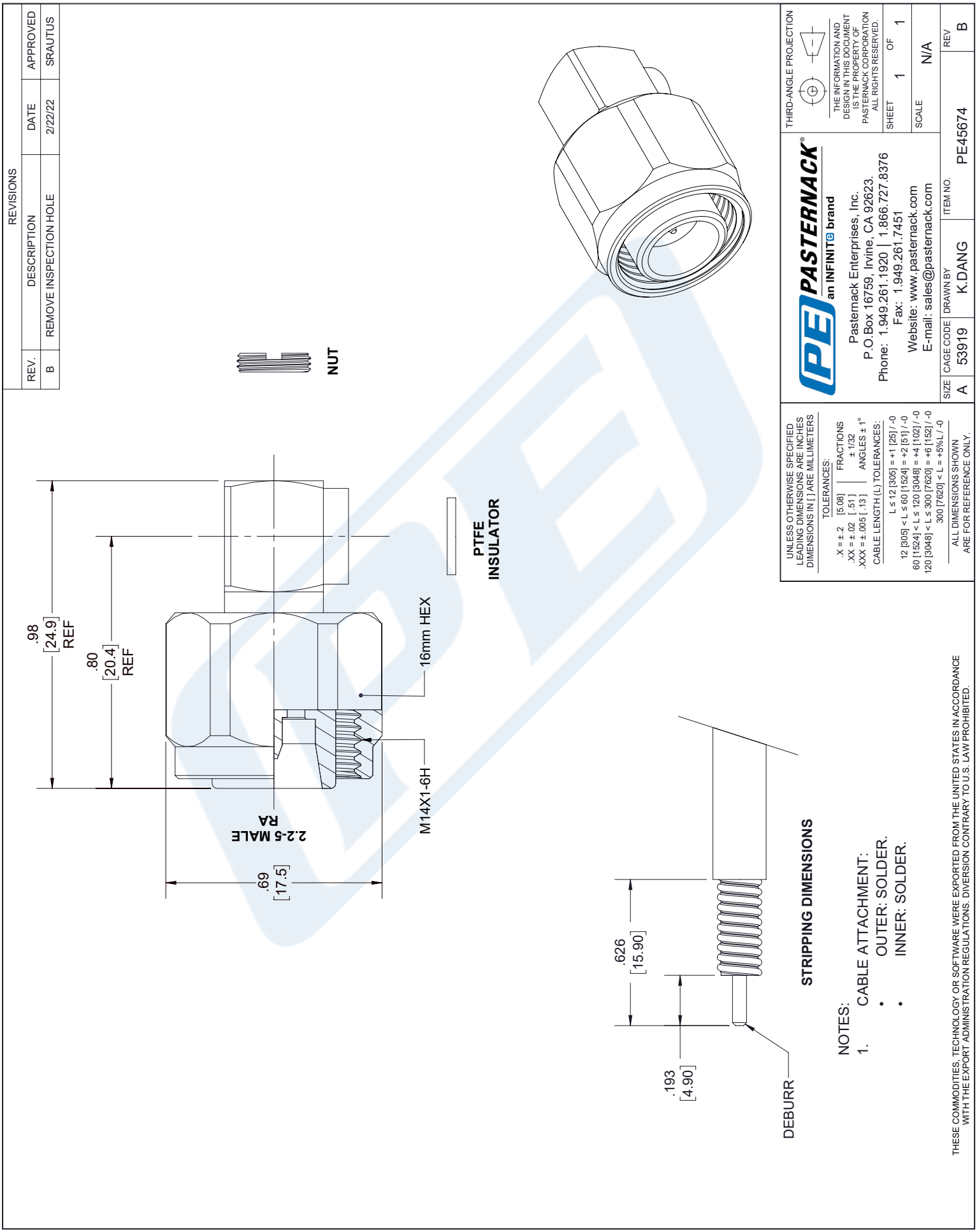

PASTERNACK
an INFINITE brand

N Male Low PIM Connector Solder Attachment for PE-1/4SFHC, SPP-250-LLPL, SPO-250, SPF-250

RF Connectors
Technical Data Sheet

PE45664

Configuration

- N Male Connector
- 50 Ohms
- Straight Body Geometry
- Connector Interface Types: PE-1/4SFHC, SPP-250-LL-PL, SPO-250, SPF-250
- Low PIM Design

Features

- Max. Operating Frequency 6 GHz
- Excellent VSWR of 1.15:1
- PIM levels lower than -160 dBc
- Silver Plated Brass Contact

Applications

- General Purpose Test
- Wireless Communications
- Custom Cable Assemblies
- Low PIM Applications

Description

Pasternack's PE45664 type N male connector with solder/solder attachment for PE-1/4SFHC, SPP-250-LLPL, SPO-250 and SPF-250 is part of our full line of RF components available for same-day shipping. Our type N male connector operates up to a maximum frequency of 6 GHz and offers excellent VSWR of 1.15:1. The type N male connector also has low passive intermodulation of -160 dBc.

Our type N male connector PE45664 datasheet specifications and drawing with dimensions are shown below in this PDF. Pasternack's broad catalog of RF, microwave and millimeter wave connectors allows designers to configure and customize their signal connections however they like. Whether the need is to provide an I/O for a board design, or simply create a custom cable assembly configuration, Pasternack has the right connector for the job. Pasternack can also expertly build your custom cable assemblies for you and ship same-day.

Electrical Specifications

Description	Minimum	Typical	Maximum	Units
Frequency Range	DC		6	GHz
VSWR			1.15:1	
Passive Intermodulation			-160	dBc
Dielectric Withstanding Voltage (AC)			750	Vrms

Mechanical Specifications

Size

Length	0.94 in [23.88 mm]
Width/Dia.	0.85 in [21.59 mm]
Weight	0.11 lbs [49.9 g]

Click the following link (or enter part number in "SEARCH" on website) to obtain additional part information including price, inventory and certifications: N Male Low PIM Connector Solder Attachment for PE-1/4SFHC, SPP-250-LLPL, SPO-250, SPF-250 PE45664

Pasternack Enterprises, Inc. • P.O. Box 16759, Irvine, CA 92623
Phone: (866) 727-8376 or (949) 261-1920 • **Fax:** (949) 261-7451
Sales@Pasternack.com • Techsupport@Pasternack.com

© 2020 Pasternack Enterprises All Rights Reserved

N Male Low PIM Connector Solder Attachment for PE-1/4SFHC, SPP-250-LLPL, SPO-250, SPF-250

Material Specifications

Description	Material	Plating
Contact	Brass	Silver
Insulation	PTFE	
Body	Brass	Tri-Metal
Coupling Nut	Brass	Tri-Metal

Mechanical Specification Notes:
Interface Conforms to IEC 61169-16

Environmental Specifications

Temperature

Operating Range -40 to +155 deg C

Compliance Certifications (see product page for current document)

Plotted and Other Data

Notes:

N Male Low PIM Connector Solder Attachment for PE-1/4SFHC, SPP-250-LLPL, SPO-250, SPF-250 from Pasternack Enterprises has same day shipment for domestic and International orders. Our RF, microwave and millimeter wave products maintain a 99.4% availability and are part of the broadest selection in the industry.

Click the following link (or enter part number in “SEARCH” on website) to obtain additional part information including price, inventory and certifications: N Male Low PIM Connector Solder Attachment for PE-1/4SFHC, SPP-250-LLPL, SPO-250, SPF-250 PE45664

URL: https://www.pasternack.com/n-male-pe-1-4sfhc-spp-250-llpl-connector-pe45664-p.aspx

The information contained in this document is accurate to the best of our knowledge and representative of the part described herein. It may be necessary to make modifications to the part and/or the documentation of the part, in order to implement improvements. Pasternack reserves the right to make such changes as required. Unless otherwise stated, all specifications are nominal. Pasternack does not make any representation or warranty regarding the suitability of the part described herein for any particular purpose, and Pasternack does not assume any liability arising out of the use of any part or documentation.

Pasternack Enterprises, Inc. • P.O. Box 16759, Irvine, CA 92623
Phone: (866) 727-8376 or (949) 261-1920 • **Fax:** (949) 261-7451
Sales@Pasternack.com • Techsupport@Pasternack.com

© 2020 Pasternack Enterprises All Rights Reserved

PE45664 CAD Drawing

N Male Low PIM Connector Solder Attachment for PE-1/4SFHC, SPP-250-LLPL, SPO-250, SPF-250

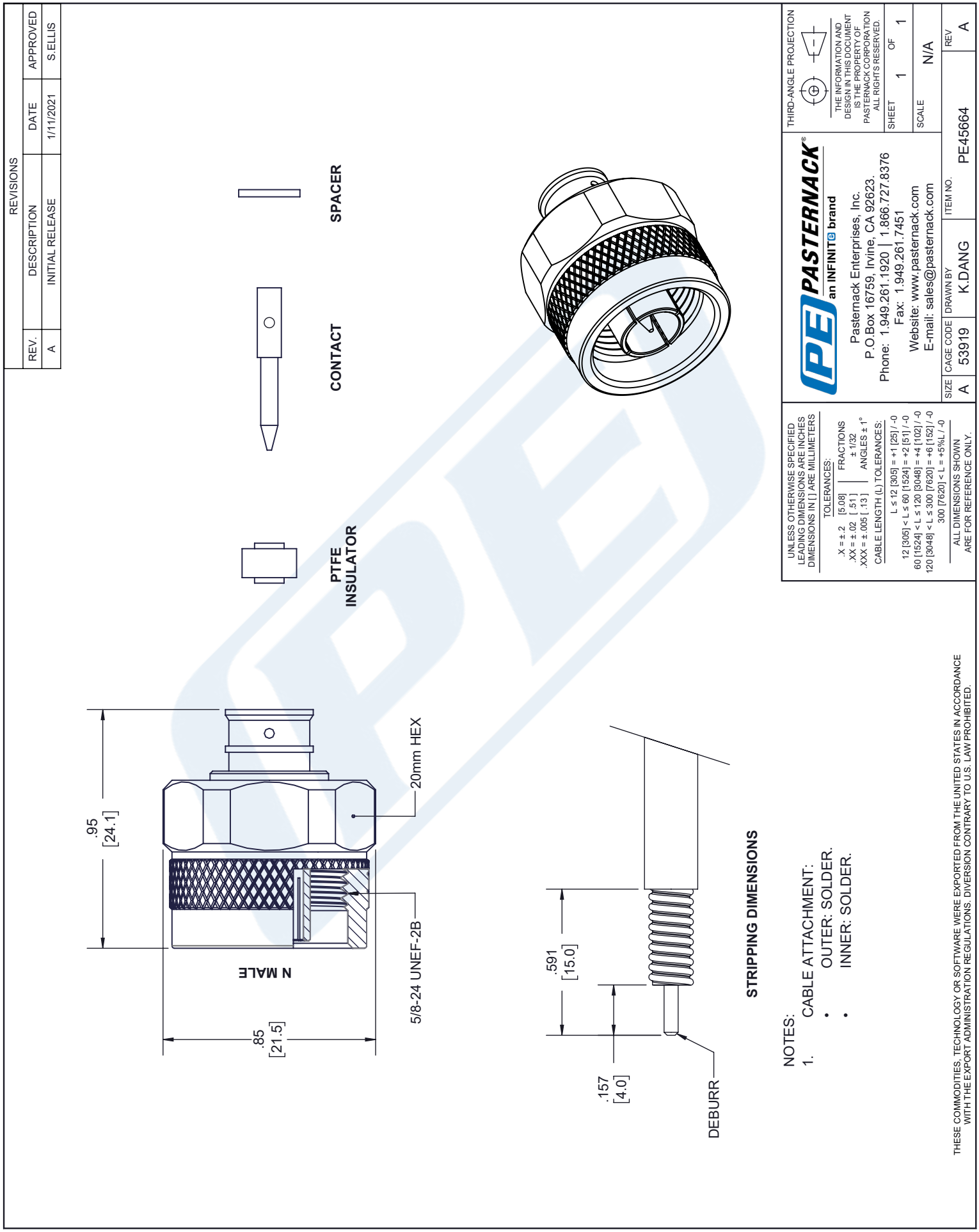

© 2020 Pasternack Enterprises All Rights Reserved

PASTERNACK
an INFINITE brand

Low Loss 1/4 Superflexible Helical Corrugated Coax Cable with Black PE Jacket

RF Cables
Technical Data Sheet

PE-1/4SFHC

Configuration

- Low Loss Corrugated Cable
- 1 Shield(s)

Features

- Low Passive Intermodulation
- Solid copper outer conductor provides the highest possible RF shielding
- Excellent return loss performance
- Highly foamed dielectric provides low attenuation
- Superflexible helically corrugated copper outer conductor enables a small bending radius

Description

Our corrugated cables and Low PIM connector combinations result in cable assemblies with excellent Passive Intermodulation performance. Solid copper outer conductors provide the highest possible RF shielding. This Superflexible cable features excellent return loss performance. The highly foamed dielectric and optimized dimensions of these cables result in excellent low attenuation values. The Superflexible helically corrugated copper outer conductor allows for a small bending radius.

Electrical Specifications

Description	Minimum	Typical	Maximum	Units
Frequency Range	DC		20.4	GHz
Cutoff Frequency		25		GHz
Impedance		50		Ohms
Velocity of Propagation		82		%
Shielding Effectiveness	120			dB
Dielectric Withstanding Voltage (DC)			900	Vdc
Jacket Spark			2,000	Vrms
Inner Conductor DC Resistance			3.2	Ohms/1000ft
Outer Conductor DC Resistance			2.53	Ohms/1000ft
Nominal Capacitance		24.4 [80.05]		pF/ft [pF/m]
Nominal Inductance		0.059 [0.19]		uH/ft [uH/m]

Click the following link (or enter part number in “SEARCH” on website) to obtain additional part information including price, inventory and certifications: Low Loss 1/4 Superflexible Helical Corrugated Coax Cable with Black PE Jacket PE-1/4SFHC

Pasternack Enterprises, Inc. • P.O. Box 16759, Irvine, CA 92623
Phone: (866) 727-8376 or (949) 261-1920 • **Fax:** (949) 261-7451
Sales@Pasternack.com • Techsupport@Pasternack.com

© 2020 Pasternack Enterprises All Rights Reserved

PASTERNACK
an INFINITE brand

Low Loss 1/4 Superflexible Helical Corrugated Coax Cable with Black PE Jacket

RF Cables
Technical Data Sheet

PE-1/4SFHC

Performance by Frequency Band

Description	F1	F2	F3	F4	F5	Units
Frequency	0.03	0.15	0.45	0.9	1.5	GHz
Attenuation, Typ	0.94	2.14	3.75	5.46	7.26	dB/100ft
	3.08	7.02	12.3	17.91	23.82	dB/100m
Input Power (CW), Max	2,090	924	520	360	278	Watts

Description	F6	F7	F8	F9	F10	Units
Frequency	1.8	2	2.2	2.5	3	GHz
Attenuation, Typ	8.02	8.52	8.99	9.67	10.73	dB/100ft
	26.31	27.95	29.49	31.73	35.2	dB/100m
Input Power (CW), Max	250	238	230	210	190	Watts

Mechanical Specifications

Diameter	0.303 in [7.7 mm}
Weight	0.048 lbs/ft [0.07 kg/m]
Number of Bends, Min	20
Min. Bend Radius (Installation)	0.5 in [12.7 mm]
Min. Bend Radius (Repeated)	1 in [25.4 mm]
Tensile Strength	79 lbs [35.83 kg]

Construction Specifications

Description	Material and Plating	Diameter
Inner Conductor	Copper Clad Aluminum, 1 Strand	0.074 in [1.88 mm]
Conductor Type	Solid	
Dielectric	PE (F)	0.187 in [4.75 mm]
First Shield	Helically Corrugated Copper Tube	0.25 in [6.35 mm]
Jacket	PE, Black	0.303 in [7.7 mm]

Click the following link (or enter part number in “SEARCH” on website) to obtain additional part information including price, inventory and certifications: Low Loss 1/4 Superflexible Helical Corrugated Coax Cable with Black PE Jacket PE-1/4SFHC

Pasternack Enterprises, Inc. • P.O. Box 16759, Irvine, CA 92623
Phone: (866) 727-8376 or (949) 261-1920 • **Fax:** (949) 261-7451
Sales@Pasternack.com • Techsupport@Pasternack.com

© 2020 Pasternack Enterprises All Rights Reserved

Low Loss 1/4 Superflexible Helical Corrugated Coax Cable with Black PE Jacket

Environmental Specifications

Temperature

Operating Range	-55 to +85 deg C

Compliance Certifications (see product page for current document)

Plotted and Other Data

Notes:

Low Loss 1/4 Superflexible Helical Corrugated Coax Cable with Black PE Jacket from Pasternack Enterprises has same day shipment for domestic and International orders. Our RF, microwave and millimeter wave products maintain a 99.4% availability and are part of the broadest selection in the industry.

Click the following link (or enter part number in “SEARCH” on website) to obtain additional part information including price, inventory and certifications: Low Loss 1/4 Superflexible Helical Corrugated Coax Cable with Black PE Jacket PE-1/4SFHC

URL: https://www.pasternack.com/50-ohm-low-loss-corrugated-1-4-superflexible-helical-coax-pe-1-4sfhc-p.aspx

The information contained in this document is accurate to the best of our knowledge and representative of the part described herein. It may be necessary to make modifications to the part and/or the documentation of the part, in order to implement improvements. Pasternack reserves the right to make such changes as required. Unless otherwise stated, all specifications are nominal. Pasternack does not make any representation or warranty regarding the suitability of the part described herein for any particular purpose, and Pasternack does not assume any liability arising out of the use of any part or documentation.

Pasternack Enterprises, Inc. • P.O. Box 16759, Irvine, CA 92623
Phone: (866) 727-8376 or (949) 261-1920 • **Fax:** (949) 261-7451
Sales@Pasternack.com • Techsupport@Pasternack.com

© 2020 Pasternack Enterprises All Rights Reserved

PE-1/4SFHC CAD Drawing

Low Loss 1/4 Superflexible Helical Corrugated Coax Cable with Black PE Jacket

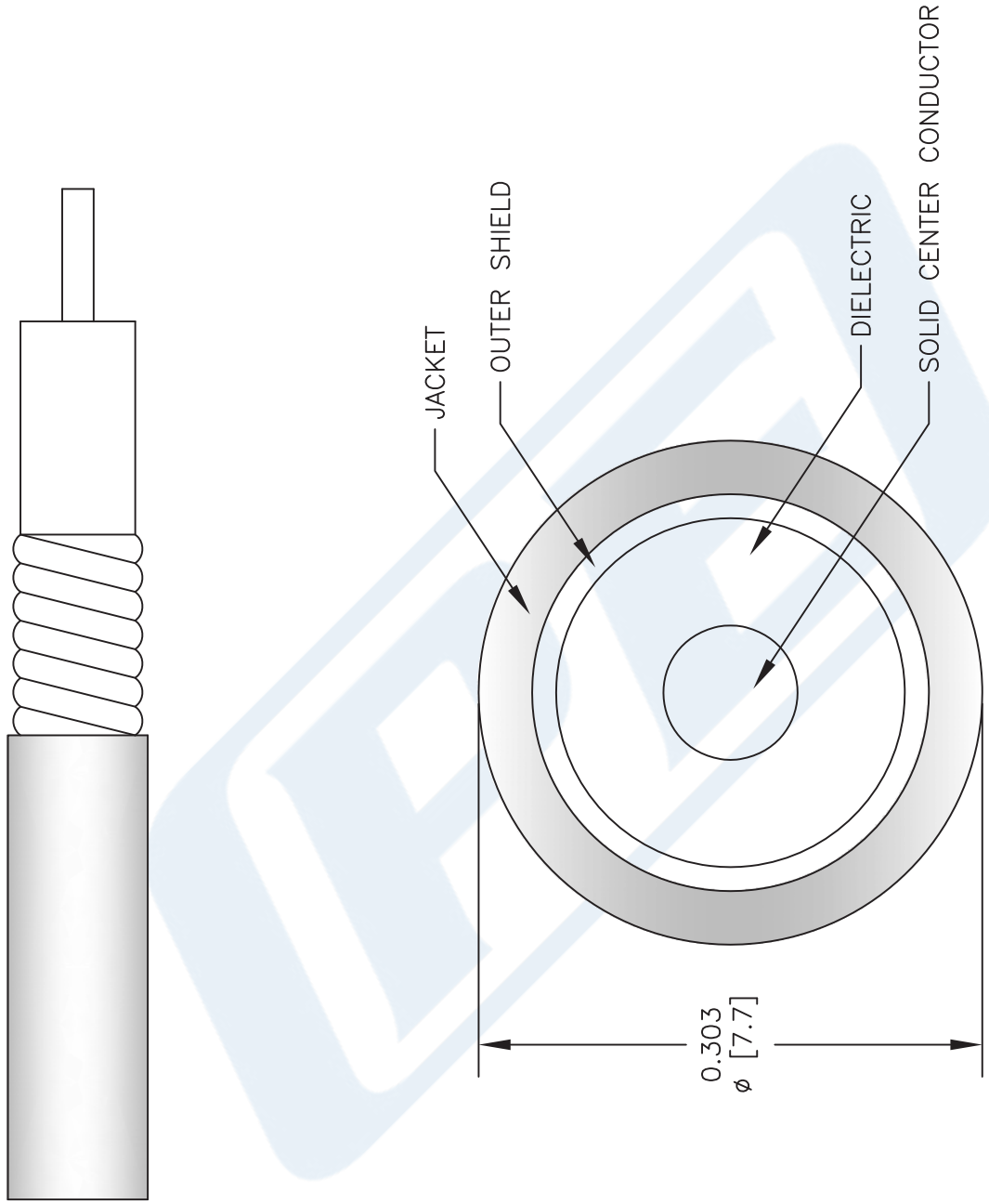

NOTES:
1. UNLESS OTHERWISE SPECIFIED ALL DIMENSIONS ARE NOMINAL.
2. ALL SPECIFICATIONS ARE SUBJECT TO CHANGE WITHOUT NOTICE AT ANY TIME.
3. DIMENSIONS ARE IN INCHES [mm].

DWG TITLE
PE-1/4SFHC

FSCM NO. 53919

CAD FILE 092112 | SCALE N/A | SIZE A | 2233

PASTERNACK®
Pasternack Enterprises, Inc.
P.O. Box 16759 | Irvine | CA | 92623
Phone: (949) 261-1920 | **Fax:** (949) 261-7451
Website: www.pasternack.com | **E-Mail:** sales@pasternack.com

© 2020 Pasternack Enterprises All Rights Reserved