PASTERNACK
an INFINITE brand

20KV Male Connector Crimp/Solder Attachment for RG213

RF Connectors
Technical Data Sheet

PE45841

Configuration

- 20KV Male Connector
- MIL-STD-202
- Straight Body Geometry
- Connector Interface Types: RG213

Features

- Gold over nickel over copper Plated Brass Contact
- High Density PE Insulator

Applications

- General Purpose Test
- Custom Cable Assemblies
- High Voltage Pulsed RF Transmission

Description

Pasternack's PE45841 20kV high voltage coaxial connector is part of our series of High Voltage coaxial interconnects. This high voltage connector minimizes the risk of electric shock due to its recessed contact design. Both cable connectors and bulkhead receptacles have recessed contacts to withstand unmated high voltage ratings. Additionally, the front mount receptacles in this family of connectors are hermetically sealed. Our 20 kV connectors operate up to maximum frequency of 300 MHz and offers good insulation resistance of 1000MOhm.These connectors allow designers to create external connections on product enclosures in a variety of high voltage transmission applications.

Our 20kV coaxial connector PE45841 has datasheet specifications and drawing with dimensions are shown below in this PDF. Pasternack's broad catalog of RF, microwave and millimeter wave connectors allows designers to configure and customize their signal connections however they like. Whether the need is to provide an I/O for a board design, or simply create a custom cable assembly configuration, Pasternack has the right connector for the job. Pasternack can also expertly build your custom cable assemblies for you and ship same-day.

Electrical Specifications

Description	Minimum	Typical	Maximum	Units
Operating Voltage (DC)			20,000	Vdc
Test Voltage (DC)			30,000	Vdc
Inner Conductor DC Resistance			3	mOhms
Outer Conductor DC Resistance			2	mOhms
Insulation Resistance	1,000			MOhms

Mechanical Specifications

Size

Length	3.90 in [99.06 mm]
Width	0.75 in [19.05 mm]
Height	0.75 in [19.05 mm]
Weight	0.02 lbs [8.16 g]

Click the following link (or enter part number in "SEARCH" on website) to obtain additional part information including price, inventory and certifications: 20KV Male Connector Crimp/Solder Attachment for RG213 PE45841

Pasternack Enterprises, Inc. • P.O. Box 16759, Irvine, CA 92623
Phone: (866) 727-8376 or (949) 261-1920 • **Fax:** (949) 261-7451
Sales@Pasternack.com • Techsupport@Pasternack.com

© 2020 Pasternack Enterprises All Rights Reserved

20KV Male Connector Crimp/Solder Attachment for RG213

RF Connectors
Technical Data Sheet

PE45841

Material Specifications

Description	Material	Plating
Contact	Brass	Gold over nickel over copper
Insulation	PE (HD)	
Body	Brass	Tinned Copper
Coupling Nut	Brass	Tinned copper
Gasket	Silicone	
Crimp Sleeve	Brass	Tinned Copper
Washer	Brass	Tinned Copper

Environmental Specifications

Temperature

Operating Range	-55 to +85 deg C
Salt Spray	MIL-STD-202, Method 101, Condiiton B

Compliance Certifications (see product page for current document)

Plotted and Other Data

Notes:

Click the following link (or enter part number in “SEARCH” on website) to obtain additional part information including price, inventory and certifications: 20KV Male Connector Crimp/Solder Attachment for RG213 PE45841

Pasternack Enterprises, Inc. • P.O. Box 16759, Irvine, CA 92623
Phone: (866) 727-8376 or (949) 261-1920 • **Fax:** (949) 261-7451
Sales@Pasternack.com • Techsupport@Pasternack.com

© 2020 Pasternack Enterprises All Rights Reserved

20KV Male Connector Crimp/Solder Attachment for RG213

RF Connectors
Technical Data Sheet

PE45841

Assembly Instruction

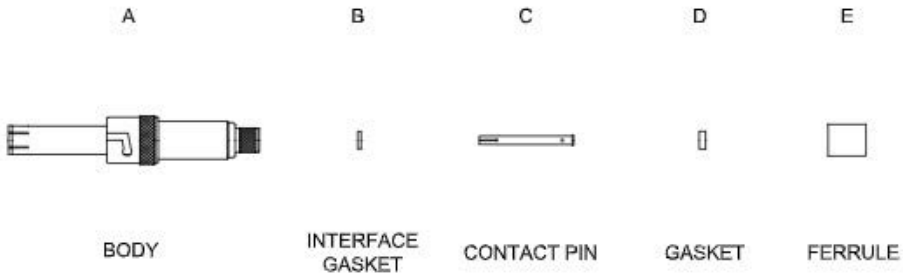

DIAGRAM	ASSEMBLY INSTRUCTION
	Step 1: STRIP AS SHOWN.
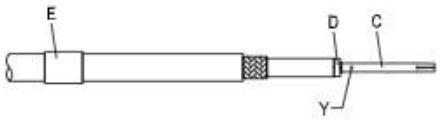	Step 2: SLIDE FERRULE " E " OVER CABLE. Step 3: PUT GASKET " D " AND PIN " C " ON CENTER CONDUCTOR AND SOLDER IN " Y ". ※ GASKET MUST BE UNDER COMPRESSION AFTER SOLDERING IS COMPLETED.
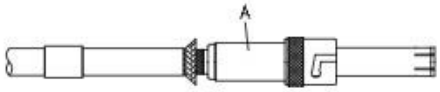	Step 4: LOOSEN BRAIDING AND SLIDE CONNECTOR " A " IN PLACE.
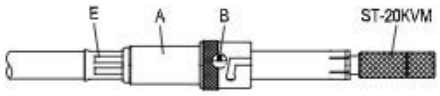	Step 5: SLIDE FERRULE " E " TOWARDS THE CONNECTOR " A " AND CRIMP. (USE 10.7mm/0.421inch HEX SECTION OF INSERT-C) STEP 6: USE LOCATOR TOOL " ST-20KVM " TO INSTALL INTERFACE GASKET " B " OVER CONTACT PIN.

Click the following link (or enter part number in “SEARCH” on website) to obtain additional part information including price, inventory and certifications: 20KV Male Connector Crimp/Solder Attachment for RG213 PE45841

Pasternack Enterprises, Inc. • P.O. Box 16759, Irvine, CA 92623
Phone: (866) 727-8376 or (949) 261-1920 • **Fax:** (949) 261-7451
Sales@Pasternack.com • Techsupport@Pasternack.com

© 2020 Pasternack Enterprises All Rights Reserved

20KV Male Connector Crimp/Solder Attachment for RG213

RF Connectors
Technical Data Sheet

PE45841

20KV Male Connector Crimp/Solder Attachment for RG213 from Pasternack Enterprises has same day shipment for domestic and International orders. Our RF, microwave and millimeter wave products maintain a 99.4% availability and are part of the broadest selection in the industry.

Click the following link (or enter part number in “SEARCH” on website) to obtain additional part information including price, inventory and certifications: 20KV Male Connector Crimp/Solder Attachment for RG213 PE45841

URL: https://www.pasternack.com/20KV-male-rg213-connector-pe45841-p.aspx

The information contained in this document is accurate to the best of our knowledge and representative of the part described herein. It may be necessary to make modifications to the part and/or the documentation of the part, in order to implement improvements. Pasternack reserves the right to make such changes as required. Unless otherwise stated, all specifications are nominal. Pasternack does not make any representation or warranty regarding the suitability of the part described herein for any particular purpose, and Pasternack does not assume any liability arising out of the use of any part or documentation.

Pasternack Enterprises, Inc. • P.O. Box 16759, Irvine, CA 92623
Phone: (866) 727-8376 or (949) 261-1920 • **Fax:** (949) 261-7451
Sales@Pasternack.com • Techsupport@Pasternack.com

© 2020 Pasternack Enterprises All Rights Reserved

PE45841 CAD Drawing

20KV Male Connector Crimp/Solder Attachment for RG213

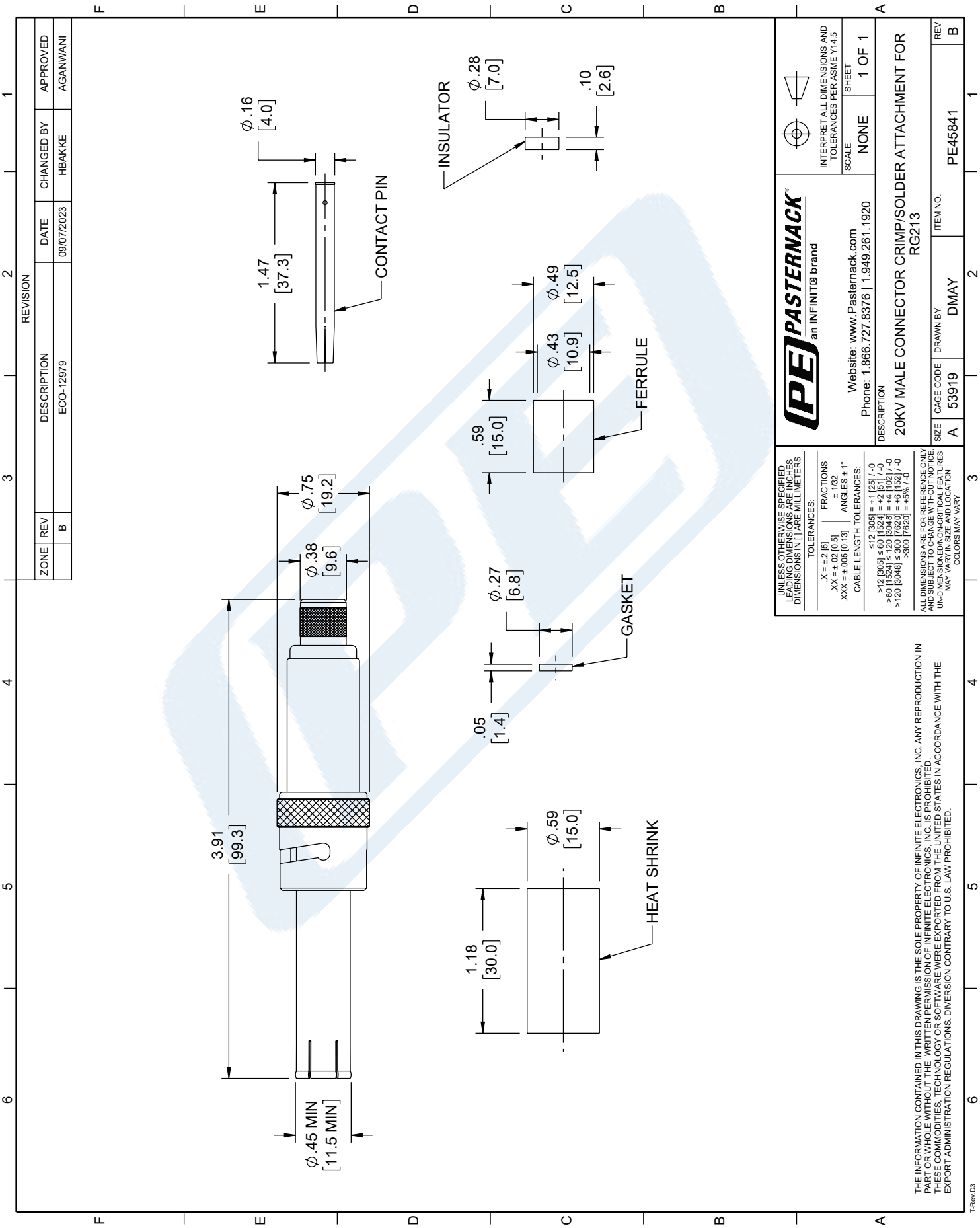

© 2020 Pasternack Enterprises All Rights Reserved

PASTERNACK®
THE ENGINEER'S RF SOURCE

SHV Jack Bulkhead Mount Connector Clamp/ Solder Attachment for RG213, RG214, RG8, RG9, RG225, RG393, RG215, .480 inch D Hole

Configuration

- SHV Jack Connector
- MIL-STD-348
- 50 Ohms
- Straight Body Geometry
- RG213, RG214, RG8, RG9, RG225, RG393, RG215 Interface Type
- Clamp/Solder Attachment
- Bulkhead

Features

- Silver Plated Contact
- Contact plating according to QQ-S-365

Applications

- General Purpose Test
- Rack and Panel Mount Applications
- Custom Cable Assemblies

Description

Pasternack's PE44049 SHV jack bulkhead connector with clamp/solder attachment for RG213, RG214, RG8, RG9, RG225, RG393 and RG215 (.480 inch D hole) is part of our full line of RF components available for same-day shipping. This SHV bulkhead connector allows designers to create external connections on their product enclosures, and can be used in a variety of other rack mount and panel mount applications.

Our SHV jack bulkhead connector PE44049 datasheet specifications and drawing with dimensions are shown below in this PDF. Pasternack's broad catalog of RF, microwave and millimeter wave connectors allows designers to configure and customize their signal connections however they like. Whether the need is to provide an I/O for a board design, or simply create a custom cable assembly configuration, Pasternack has the right connector for the job. Pasternack can also expertly build your custom cable assemblies for you and ship same-day.

Mechanical Specifications

Size

Length	2.15 in [54.61 mm]
Width/Dia.	0.75 in [19.05 mm]
Weight	0.11 lbs [49.9 g]

Material Specifications

Description	Material	Plating
Contact		Silver QQ-S-365
Insulation	PTFE	
Body	Brass	Nickel QQ-N-290

Click the following link (or enter part number in "SEARCH" on website) to obtain additional part information including price, inventory and certifications: SHV Jack Bulkhead Mount Connector Clamp/Solder Attachment for RG213, RG214, RG8, RG9, RG225, RG393, RG215, .480 inch D Hole PE44049

Pasternack Enterprises, Inc. • P.O. Box 16759, Irvine, CA 92623
Phone: (866) 727-8376 or (949) 261-1920 • **Fax:** (949) 261-7451
Sales@Pasternack.com • Techsupport@Pasternack.com

© 2016 Pasternack Enterprises All Rights Reserved

SHV Jack Bulkhead Mount Connector Clamp/ Solder Attachment for RG213, RG214, RG8, RG9, RG225, RG393, RG215, .480 inch D Hole

Compliance Certifications (see product page for current document)

Plotted and Other Data

Notes:

SHV Jack Bulkhead Mount Connector Clamp/Solder Attachment for RG213, RG214, RG8, RG9, RG225, RG393, RG215, .480 inch D Hole from Pasternack Enterprises has same day shipment for domestic and International orders. Our RF, microwave and millimeter wave products maintain a 99% availability and are part of the broadest selection in the industry.

Click the following link (or enter part number in "SEARCH" on website) to obtain additional part information including price, inventory and certifications: SHV Jack Bulkhead Mount Connector Clamp/Solder Attachment for RG213, RG214, RG8, RG9, RG225, RG393, RG215, .480 inch D Hole PE44049

URL: https://www.pasternack.com/shv-jack-standard-rg213-rg214-rg8-rg9-rg225-rg393-connector-pe44049-p.aspx

The information contained in this document is accurate to the best of our knowledge and representative of the part described herein. It may be necessary to make modifications to the part and/or the documentation of the part, in order to implement improvements. Pasternack reserves the right to make such changes as required. Unless otherwise stated, all specifications are nominal. Pasternack does not make any representation or warranty regarding the suitability of the part described herein for any particular purpose, and Pasternack does not assume any liability arising out of the use of any part or documentation.

Pasternack Enterprises, Inc. • P.O. Box 16759, Irvine, CA 92623
Phone: (866) 727-8376 or (949) 261-1920 • **Fax:** (949) 261-7451
Sales@Pasternack.com • Techsupport@Pasternack.com

© 2016 Pasternack Enterprises All Rights Reserved

PE44049 CAD Drawing

SHV Jack Bulkhead Mount Connector Clamp/Solder Attachment for RG213, RG214, RG8, RG9, RG225, RG393, RG215, .480 inch D Hole

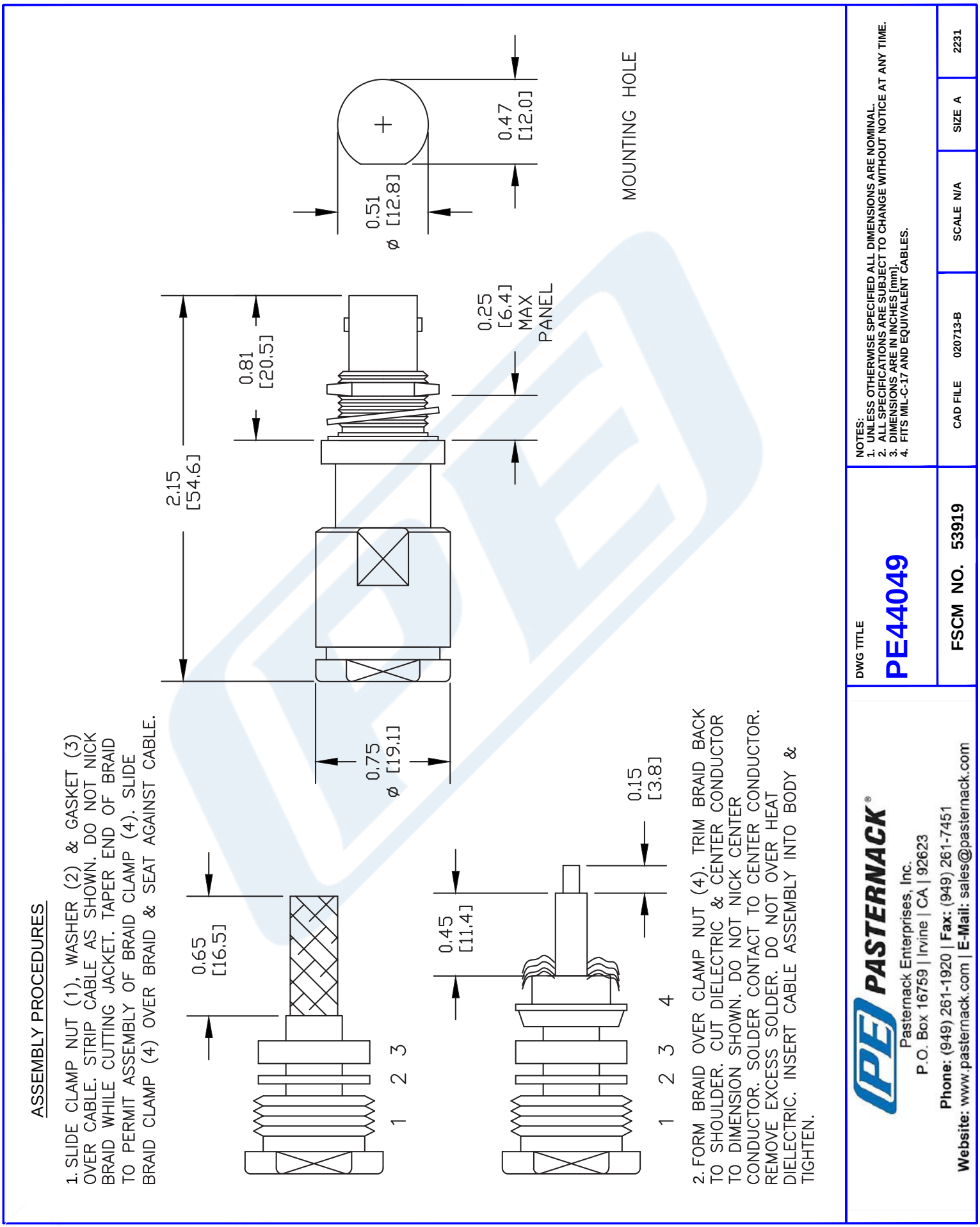

© 2016 Pasternack Enterprises All Rights Reserved

PASTERNACK®
THE ENGINEER'S RF SOURCE

Flexible RG213 Coax Cable Single Shielded with Black PVC Jacket

TECHNICAL DATA SHEET RG213/U

Configuration

Inner Conductor Material and Plating	Copper
Dielectric Type	PE
Shield Materials	Copper Braid
Jacket Material and Color	PVC, Black

Electrical Specifications

Impedance, Ohms	50
Velocity of Propagation, %	66
Maximum Operating Frequency, MHz	1000
Capacitance, pF/ft [pF/m]	30.8 [101.05]

Electrical Specifications by Frequency

Frequency 1

Frequency, MHz	100
Attenuation, dB/100ft [dB/100m]	2.1 [6.89]

Frequency 2

Frequency, MHz	400
Attenuation, dB/100ft [dB/100m]	4.8 [15.75]

Frequency 3

Frequency, MHz	1000
Attenuation, dB/100ft [dB/100m]	8 [26.25]

Mechanical Specifications

Inner Conductor

Number of Strands	7
Material	Copper
Diameter, in [mm]	0.09 [2.29]

Dielectric:

Type	PE
Diameter, in [mm]	0.285 [7.24]

Shield:

Number of	1
Material 1	Copper Braid
Diameter, in [mm]	0.314 [7.98]

Click the following link (or enter part number in "SEARCH" on website) to obtain additional part information including price, inventory and certifications: Flexible RG213 Coax Cable Single Shielded with Black PVC Jacket RG213/U

Pasternack Enterprises, Inc. • P.O. Box 16759, Irvine, CA 92623
Phone: (866) 727-8376 or (949) 261-1920 • **Fax:** (949) 261-7451
Sales@Pasternack.com • Techsupport@Pasternack.com

© 2015 Pasternack Enterprises All Rights Reserved

Flexible RG213 Coax Cable Single Shielded with Black PVC Jacket

Jacket:

Material	PVC
Diameter, in [mm]	0.405 [10.29]
Color	Black
Weight, lbs/ft [Kg/m]	0.115 [0.17]

Compliance Certifications (visit www.Pasternack.com for current document)

RoHS Compliant	
REACH Compliant	06/18/2012

Plotted and Other Data

Notes:

- Values at +25 °C, sea level
- Max. Operating Voltage(VRMS): 5000

Flexible RG213 Coax Cable Single Shielded with Black PVC Jacket from Pasternack Enterprises has same day shipment for domestic and International orders. Our RF, microwave and millimeter wave products maintain a 99% availability and are part of the broadest selection in the industry.

Click the following link (or enter part number in "SEARCH" on website) to obtain additional part information including price, inventory and certifications: Flexible RG213 Coax Cable Single Shielded with Black PVC Jacket RG213/U

URL: http://www.pasternack.com/flexible-0.405-rg213-50-ohm-coax-cable-pvc-jacket-rg213-u-p.aspx

The information contained in this document is accurate to the best of our knowledge and representative of the part described herein. It may be necessary to make modifications to the part and/or the documentation of the part, in order to implement improvements. Pasternack reserves the right to make such changes as required. Unless otherwise stated, all specifications are nominal. Pasternack does not make any representation or warranty regarding the suitability of the part described herein for any particular purpose, and Pasternack does not assume any liability arising out of the use of any part or documentation.

Pasternack Enterprises, Inc. • P.O. Box 16759, Irvine, CA 92623
Phone: (866) 727-8376 or (949) 261-1920 • **Fax:** (949) 261-7451
Sales@Pasternack.com • Techsupport@Pasternack.com

© 2015 Pasternack Enterprises All Rights Reserved

RG213/U CAD Drawing

Flexible RG213 Coax Cable Single Shielded with Black PVC Jacket

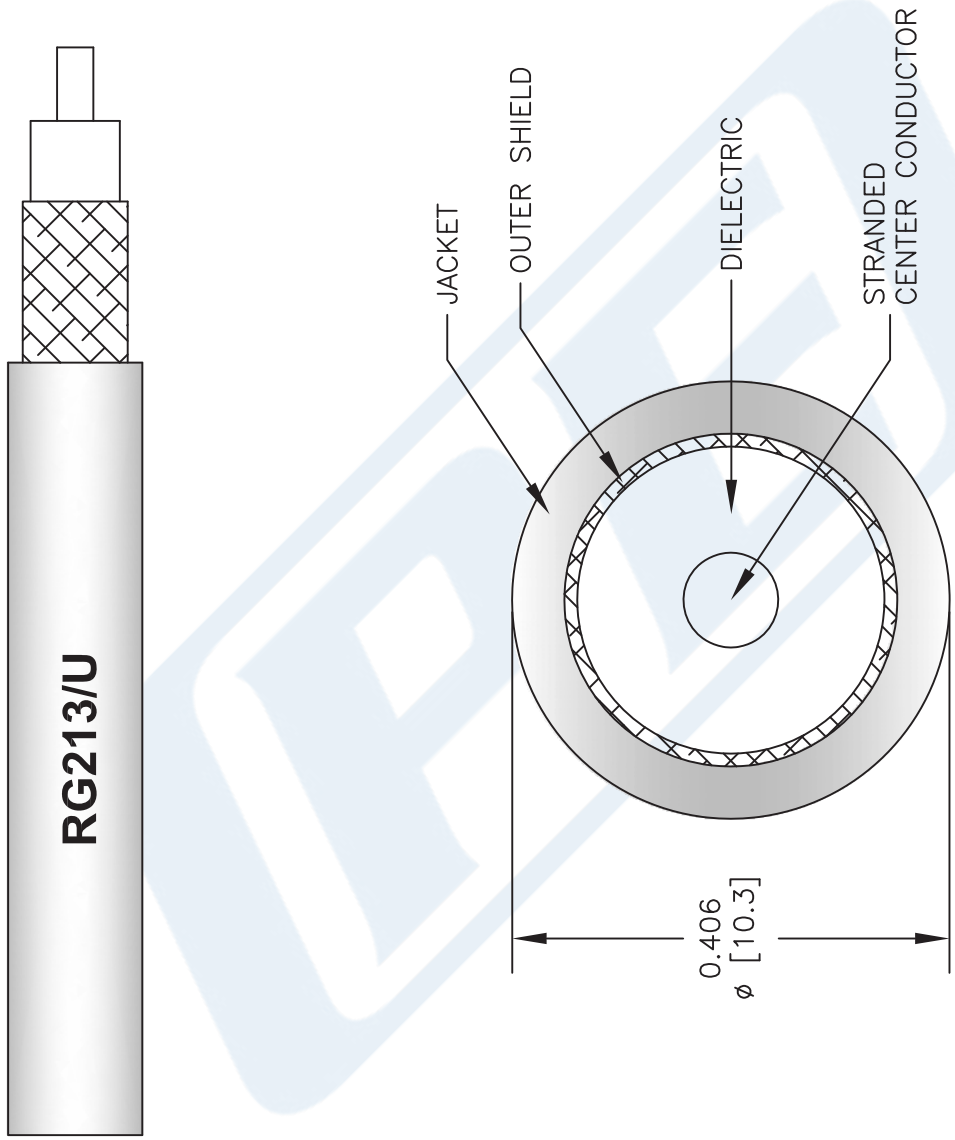

NOTES:
1. UNLESS OTHERWISE SPECIFIED ALL DIMENSIONS ARE NOMINAL.
2. ALL SPECIFICATIONS ARE SUBJECT TO CHANGE WITHOUT NOTICE AT ANY TIME.
3. DIMENSIONS ARE IN INCHES [mm].

DWG TITLE
RG213/U

FSCM NO. 53919

CAD FILE 061312-B | SCALE N/A | SIZE A | 2233

PASTERNACK®
Pasternack Enterprises, Inc.
P.O. Box 16759 | Irvine | CA | 92623
Phone: (949) 261-1920 | **Fax:** (949) 261-7451
Website: www.pasternack.com | **E-Mail:** sales@pasternack.com

© 2015 Pasternack Enterprises All Rights Reserved