PASTERNACK®
THE ENGINEER'S RF SOURCE

2.92mm Male Connector Solder Attachment for PE-SR402AL, PE-SR402FL, PE-SR402FLJ, PE-SR402TN, RG402

RF Connectors Technical Data Sheet PE4987

Configuration

- 2.92mm Male Connector
- 50 Ohms
- Straight Body Geometry
- PE-SR402AL, PE-SR402FL, PE-SR402FLJ, PE-SR402TN, RG402 Interface Type
- Solder Attachment
- 5/16 inch Hex

Features

- Gold over Nickel Plated Beryllium Copper Contact
- 50 µin minimum contact plating

Applications

- General Purpose Test
- Custom Cable Assemblies

Description

Pasternack's PE4987 2.92mm male connector with solder attachment for PE-SR402AL, PE-SR402FL, PE-SR402FLJ, PE-SR402TN and RG402 is part of our full line of RF components available for same-day shipping.

Our 2.92mm male connector PE4987 datasheet specifications and drawing with dimensions are shown below in this PDF. Pasternack's broad catalog of RF, microwave and millimeter wave connectors allows designers to configure and customize their signal connections however they like. Whether the need is to provide an I/O for a board design, or simply create a custom cable assembly configuration, Pasternack has the right connector for the job. Pasternack can also expertly build your custom cable assemblies for you and ship same-day.

Mechanical Specifications

Size

Length	0.37 in [9.4 mm]
Width/Dia.	0.312 in [7.92 mm]
Weight	0.006 lbs [2.72 g]
Mating Torque	8 to 10 in-lbs [0.90 to 1.13 Nm]

Material Specifications

Description	Material	Plating
Contact	Beryllium Copper	Gold over Nickel 50 µin minimum
Insulation	PCTFE	
Body	Stainless Steel	Gold over Nickel 50 µin minimum
Coupling Nut	Stainless Steel	Gold over Nickel 50 µin minimum

Click the following link (or enter part number in "SEARCH" on website) to obtain additional part information including price, inventory and certifications: 2.92mm Male Connector Solder Attachment for PE-SR402AL, PE-SR402FL, PE-SR402FLJ, PE-SR402TN, RG402 PE4987

Pasternack Enterprises, Inc. • P.O. Box 16759, Irvine, CA 92623
Phone: (866) 727-8376 or (949) 261-1920 • **Fax:** (949) 261-7451
Sales@Pasternack.com • Techsupport@Pasternack.com

© 2016 Pasternack Enterprises All Rights Reserved

2.92mm Male Connector Solder Attachment for PE-SR402AL, PE-SR402FL, PE-SR402FLJ, PE-SR402TN, RG402

Compliance Certifications (see product page for current document)

Plotted and Other Data

Notes:

2.92mm Male Connector Solder Attachment for PE-SR402AL, PE-SR402FL, PE-SR402FLJ, PE-SR402TN, RG402 from Pasternack Enterprises has same day shipment for domestic and International orders. Our RF, microwave and millimeter wave products maintain a 99% availability and are part of the broadest selection in the industry.

Click the following link (or enter part number in "SEARCH" on website) to obtain additional part information including price, inventory and certifications: 2.92mm Male Connector Solder Attachment for PE-SR402AL, PE-SR402FL, PE-SR402FLJ, PE-SR402TN, RG402 PE4987

URL: https://www.pasternack.com/2.92mm-male-standard-pe-sr402al-pe-sr402fl-rg402-connector-pe4987-p.aspx

The information contained in this document is accurate to the best of our knowledge and representative of the part described herein. It may be necessary to make modifications to the part and/or the documentation of the part, in order to implement improvements. Pasternack reserves the right to make such changes as required. Unless otherwise stated, all specifications are nominal. Pasternack does not make any representation or warranty regarding the suitability of the part described herein for any particular purpose, and Pasternack does not assume any liability arising out of the use of any part or documentation.

Pasternack Enterprises, Inc. • P.O. Box 16759, Irvine, CA 92623
Phone: (866) 727-8376 or (949) 261-1920 • **Fax:** (949) 261-7451
Sales@Pasternack.com • Techsupport@Pasternack.com

© 2016 Pasternack Enterprises All Rights Reserved

PE4987 CAD Drawing

2.92mm Male Connector Solder Attachment for PE-SR402AL, PE-SR402FL, PE-SR402FLJ, PE-SR402TN, RG402

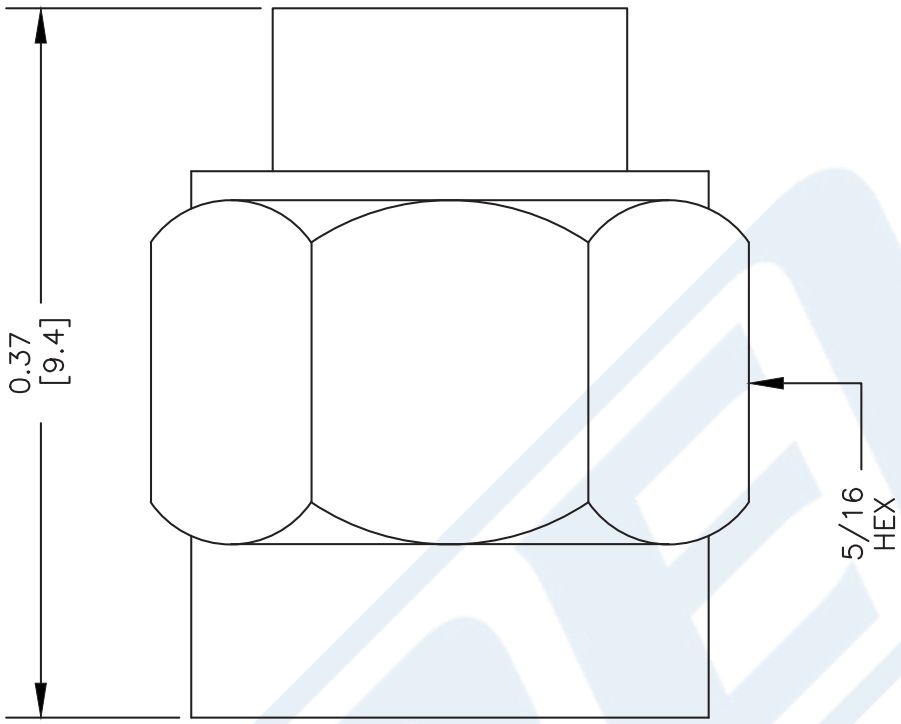

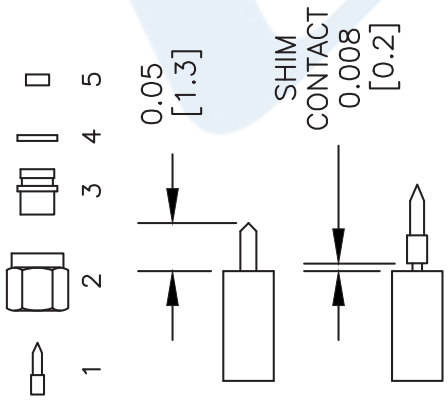

ASSEMBLY PROCEDURES

1. STRIP CABLE AS SHOWN. DO NOT NICK CENTER CONDUCTOR.
2. SOLDER CONTACT (1) TO CENTER CONDUCTOR. SLIDE COUPLING NUT (2) OVER CABLE. SLIDE BODY (3) OVER CONTACT UNTIL IT BOTTOMS OUT TO OUTER CONDUCTOR. SOLDER BODY (3) TO OUTER CONDUCTOR.
3. INSTALL GASKET (4) ONTO BODY (3). INSERT INSULATOR (5) INTO BODY (3) & SLIDE COUPLING NUT OVER ASSEMBLY.

NOTES:
1. UNLESS OTHERWISE SPECIFIED ALL DIMENSIONS ARE NOMINAL.
2. ALL SPECIFICATIONS ARE SUBJECT TO CHANGE WITHOUT NOTICE AT ANY TIME.
3. DIMENSIONS ARE IN INCHES [mm].
4. FITS MIL-C-17 AND EQUIVALENT CABLES.

DWG TITLE
PE4987

FSCM NO. 53919

CAD FILE 061702 | SCALE N/A | SIZE A | 127

PASTERNACK®
Pasternack Enterprises, Inc.
P.O. Box 16759 | Irvine | CA | 92623
Phone: (949) 261-1920 | **Fax:** (949) 261-7451
Website: www.pasternack.com | **E-Mail:** sales@pasternack.com

© 2016 Pasternack Enterprises All Rights Reserved

PASTERNACK
an INFINITE brand

TNC Male Connector Clamp/Solder Attachment For PE-SR402AL, PE-SR402FL, RG402

RF Connectors Technical Data Sheet

PE4143

Configuration

- TNC Male Connector
- 50 Ohms
- Straight Body Geometry
- Connector Interface Types: PE-SR402AL, PE-SR402FL, RG402

Applications

- General Purpose Test
- Custom Cable Assemblies

Description

Pasternack's PE4143 TNC male connector with clamp/solder attachment for PE-SR402AL, PE-SR402FL and RG402 is part of our full line of RF components available for same-day shipping.

Our TNC male connector PE4143 datasheet specifications and drawing with dimensions are shown below in this PDF. Pasternack's broad catalog of RF, microwave and millimeter wave connectors allows designers to configure and customize their signal connections however they like. Whether the need is to provide an I/O for a board design, or simply create a custom cable assembly configuration, Pasternack has the right connector for the job. Pasternack can also expertly build your custom cable assemblies for you and ship same-day.

Mechanical Specifications

Weight 0.055 lbs [24.95 g]

Material Specifications

Description	Material	Plating
Body	Brass	Nickel

Environmental Specifications

Compliance Certifications (see product page for current document)

Plotted and Other Data

Notes:

Click the following link (or enter part number in "SEARCH" on website) to obtain additional part information including price, inventory and certifications: TNC Male Connector Clamp/Solder Attachment For PE-SR402AL, PE-SR402FL, RG402 PE4143

Pasternack Enterprises, Inc. • P.O. Box 16759, Irvine, CA 92623
Phone: (866) 727-8376 or (949) 261-1920 • **Fax:** (949) 261-7451
Sales@Pasternack.com • Techsupport@Pasternack.com

© 2020 Pasternack Enterprises All Rights Reserved

PASTERNACK
an INFINITE brand

TNC Male Connector Clamp/Solder Attachment For PE-SR402AL, PE-SR402FL, RG402

RF Connectors Technical Data Sheet

PE4143

TNC Male Connector Clamp/Solder Attachment For PE-SR402AL, PE-SR402FL, RG402 from Pasternack Enterprises has same day shipment for domestic and International orders. Our RF, microwave and millimeter wave products maintain a 99.4% availability and are part of the broadest selection in the industry.

Click the following link (or enter part number in “SEARCH” on website) to obtain additional part information including price, inventory and certifications: TNC Male Connector Clamp/Solder Attachment For PE-SR402AL, PE-SR402FL, RG402 PE4143

URL: https://www.pasternack.com/tnc-male-standard-pe-sr402al-pe-sr402fl-rg402-connector-pe4143-p.aspx

The information contained in this document is accurate to the best of our knowledge and representative of the part described herein. It may be necessary to make modifications to the part and/or the documentation of the part, in order to implement improvements. Pasternack reserves the right to make such changes as required. Unless otherwise stated, all specifications are nominal. Pasternack does not make any representation or warranty regarding the suitability of the part described herein for any particular purpose, and Pasternack does not assume any liability arising out of the use of any part or documentation.

Pasternack Enterprises, Inc. • P.O. Box 16759, Irvine, CA 92623
Phone: (866) 727-8376 or (949) 261-1920 • **Fax:** (949) 261-7451
Sales@Pasternack.com • Techsupport@Pasternack.com

© 2020 Pasternack Enterprises All Rights Reserved

PE4143 CAD Drawing

TNC Male Connector Clamp/Solder Attachment For PE-SR402AL, PE-SR402FL, RG402

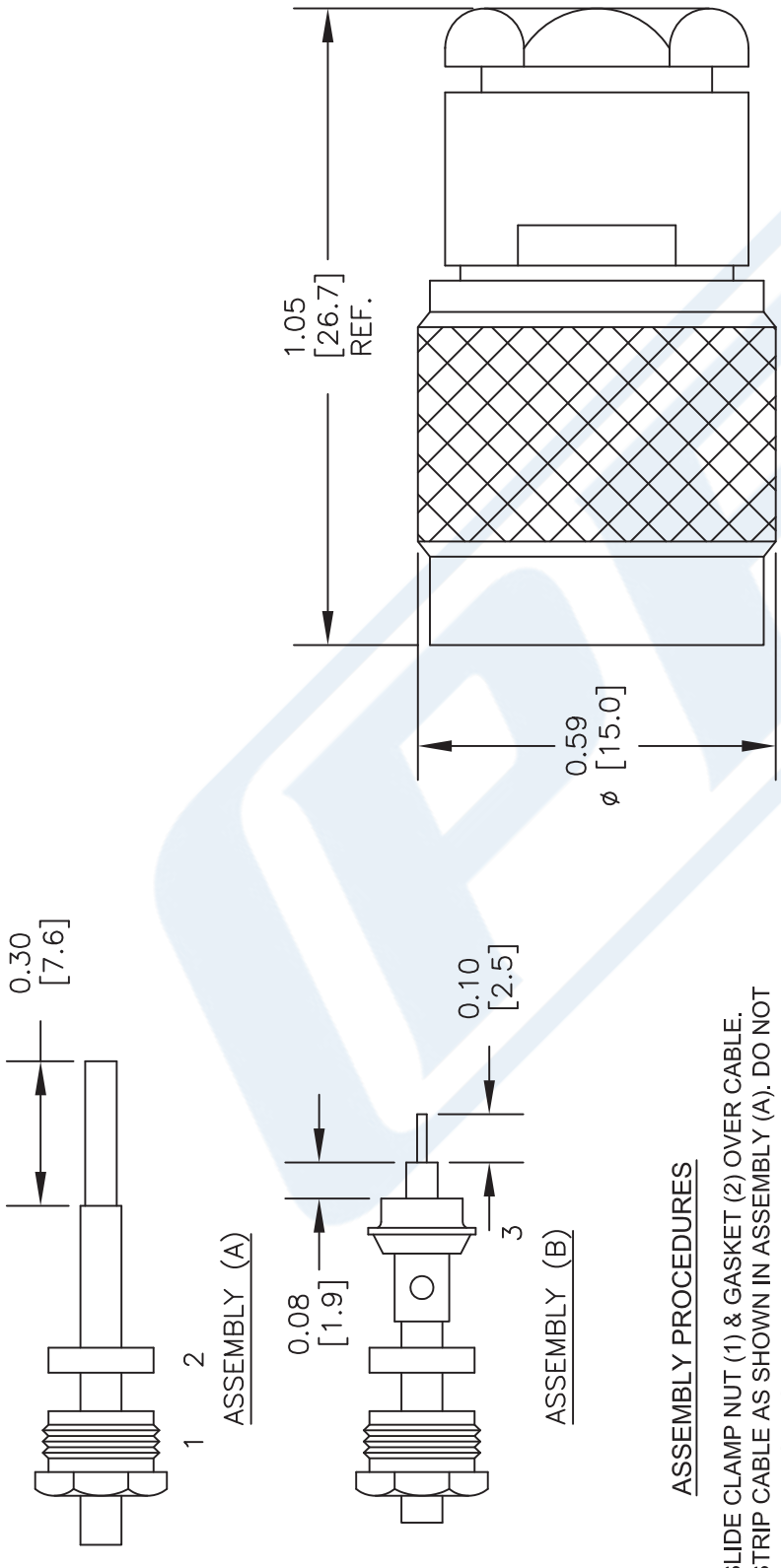

ASSEMBLY PROCEDURES

1. SLIDE CLAMP NUT (1) & GASKET (2) OVER CABLE. STRIP CABLE AS SHOWN IN ASSEMBLY (A). DO NOT CUT DIELECTRIC.
2. SLIDE ADAPTER (3) OVER CABLE UNTIL ADAPTER (3) BOTTOMS ON OUTER CONDUCTOR. SOLDER ADAPTER (3) TO OUTER CONDUCTOR USING MINIMUM HEAT.
3. STRIP CABLE AS SHOWN IN ASSEMBLY (B). SOLDER CONTACT TO CENTER CONDUCTOR. SLIDE ASSEMBLY FORWARD & TIGHTEN TO BODY.

NOTES:
1. UNLESS OTHERWISE SPECIFIED ALL DIMENSIONS ARE NOMINAL.
2. ALL SPECIFICATIONS ARE SUBJECT TO CHANGE WITHOUT NOTICE AT ANY TIME.
3. DIMENSIONS ARE IN INCHES [mm].
4. FITS MIL-C-17 AND EQUIVALENT CABLES.

DWG TITLE
PE4143

FSCM NO. 53919

CAD FILE 042309 | SCALE N/A | SIZE A | 147

PASTERNACK®
THE ENGINEER'S RF SOURCE
Pasternack Enterprises, Inc.
P.O. Box 16759 | Irvine | CA | 92623
Phone: (949) 261-1920 | **Fax:** (949) 261-7451
Website: www.pasternack.com | **E-Mail:** sales@pasternack.com

© 2020 Pasternack Enterprises All Rights Reserved

RG402 Coax Cable with Copper Outer Conductor

RG402/U

Configuration

- Semi-Rigid Cable
- M17/130-RG402
- 1 Shield(s)

Features

- Frequency range of 34 GHz
- Can be bent and formed into shape
- Low Loss
- Phase Stable

Applications

- Military & Defense
- Cable Assemblies
- Precise cable routing

Description

RG402/U part number from Pasternack is a RG402 coax cable that is semi-rigid. Pasternack RG402 semi-rigid coax cable is 50 Ohm and has a PTFE dielectric.RG402 coax has a shield count of 1 and the maximum frequency for this Pasternack cable is 34 GHz. RG402 coax cable has an attenuation at 1 GHz of 11.1 dB and a maximum power of 450 watts at 1 GHz.

Pasternack RG402 coax cables are part of over 40,000 RF, microwave and millimeter wave components. RG402 cables and our other RF parts are available for same day shipping worldwide. Custom RF cable assemblies using RG402 or other coax can be built and shipped same day as well.

Electrical Specifications

Description	Minimum	Typical	Maximum	Units
Frequency Range	DC		34	GHz
Impedance		50		Ohms
Velocity of Propagation		69.5		%
Dielectric Withstanding Voltage (AC)			5,000	Vrms
Corona Discharge at 60 Hz			1,900	Vrms
Power@ 1GHz			450	Watts

Performance by Frequency Band

Description	F1	F2	F3	F4	F5	Units
Frequency	0.5	1	10	18	26.5	GHz
Attenuation, Typ	7.6	11.1	43.4	63.6	82.8	dB/100ft
	24.93	36.42	142.39	208.66	271.65	dB/100m
Input Power (CW), Max	600	450	120	73	70	Watts

Mechanical Specifications

Weight	0.032 lbs/ft [0.05 kg/m]
Min. Bend Radius (Repeated)	0.25 in [6.35 mm]

© 2023 Infinite Electronics, Inc. Pasternack is a registered trademark of Infinite Electronics, Inc.
+1 (866) 558-2786 | sales@pasternack.com | pasternack.com

RG402 Coax Cable with Copper Outer Conductor

RG402/U

Construction Specifications

Description	Material and Plating	Diameter
Inner Conductor	Copper Clad Steel, Silver, 1 Strand	0.036 in [0.91 mm]
Conductor Type	Solid	
Dielectric	PTFE	0.118 in [3 mm]
Outer Conductor	Copper	0.141 in [3.5 mm]
Jacket	Tan	

Environmental Specifications

Temperature

Operating Range -55 to 125 deg C

Compliance Certifications (see product page for current document)

Plotted and Other Data

Notes:

RG402 Coax Cable with Copper Outer Conductor from Pasternack Enterprises has same day shipment for domestic and International orders. Our RF, microwave and millimeter wave products maintain a 99.4% availability and are part of the broadest selection in the industry.

Click the following link (or enter part number in "SEARCH" on website) to obtain additional part information including price, inventory and certifications: RG402 Coax Cable with Copper Outer Conductor RG402/U

URL: https://www.pasternack.com/semirigid-0.141-rg402-50-ohm-coax-cable-copper-rg402-u-p.aspx

The information contained within this document is accurate to the best of our knowledge and representative of the part described herein. It may be necessary to make modifications to the part and/or the documentation of the part in order to impliment improvements. Pasternack Enterprises reserves the right to make such changes as required. Unless otherwise stated, all specifications are nominal. Pasternack Enterprises does not make any representation or warranty regarding the suitability of the part described herein for any particular purpose, and Pasternack Enterprises does not assume liability arising out of the use of any part or document.

© 2023 Infinite Electronics, Inc. Pasternack is a registered trademark of Infinite Electronics, Inc.

RG402/U CAD Drawing

RG402 Coax Cable with Copper Outer Conductor

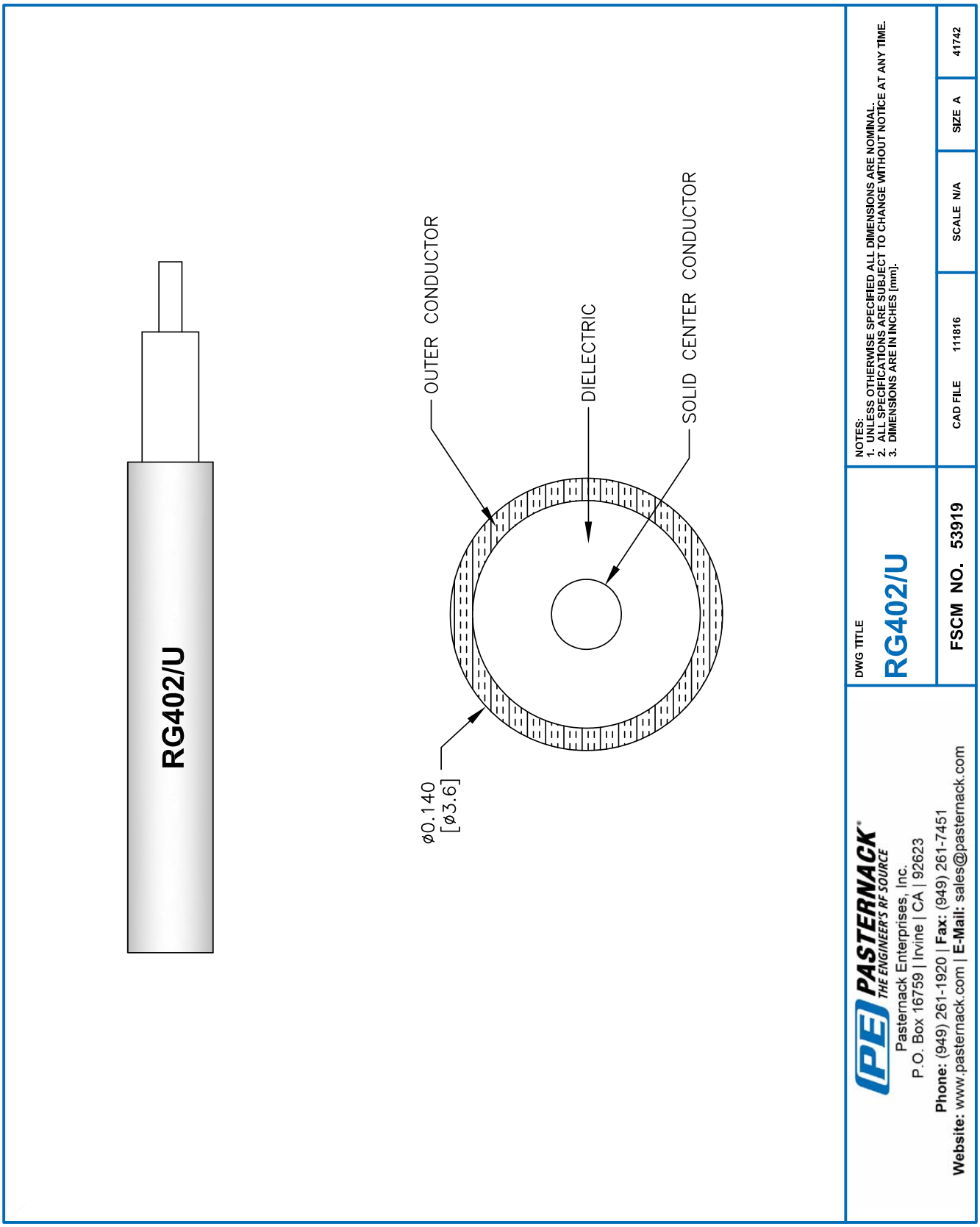

© 2023 Infinite Electronics, Inc. Pasternack is a registered trademark of Infinite Electronics, Inc.