PASTERNACK®
THE ENGINEER'S RF SOURCE

MMCX Jack Connector Crimp/Solder Attachment for RG174, RG316, RG188, 0.100 inch, PE-B100, PE-C100, LMR-100

Configuration

- MMCX Jack Connector
- 50 Ohms
- Straight Body Geometry
- RG174, RG316, RG188, 0.100 inch, PE-B100, PE-C100, LMR-100 Interface Type
- Crimp/Solder Attachment

Features

- Gold Plated Beryllium Copper Contact

Applications

- General Purpose Test
- Custom Cable Assemblies

Description

Pasternack's PE4901 MMCX jack connector with crimp/solder attachment for RG174, RG316, RG188, 0.100 inch, PE-B100, PE-C100 and LMR-100 is part of our full line of RF components available for same-day shipping.

Our MMCX jack connector PE4901 datasheet specifications and drawing with dimensions are shown below in this PDF. Pasternack's broad catalog of RF, microwave and millimeter wave connectors allows designers to configure and customize their signal connections however they like. Whether the need is to provide an I/O for a board design, or simply create a custom cable assembly configuration, Pasternack has the right connector for the job. Pasternack can also expertly build your custom cable assemblies for you and ship same-day.

Mechanical Specifications

Size

Length	0.71 in [18.03 mm]
Width/Dia.	0.157 in [3.99 mm]
Weight	0.003 lbs [1.36 g]

Material Specifications

Description	Material	Plating
Contact	Beryllium Copper	Gold
Insulation	PTFE	
Body	Brass	Gold

Click the following link (or enter part number in "SEARCH" on website) to obtain additional part information including price, inventory and certifications: MMCX Jack Connector Crimp/Solder Attachment for RG174, RG316, RG188, 0.100 inch, PE-B100, PE-C100, LMR-100 PE4901

Pasternack Enterprises, Inc. • P.O. Box 16759, Irvine, CA 92623
Phone: (866) 727-8376 or (949) 261-1920 • **Fax:** (949) 261-7451
Sales@Pasternack.com • Techsupport@Pasternack.com

© 2016 Pasternack Enterprises All Rights Reserved

MMCX Jack Connector Crimp/Solder Attachment for RG174, RG316, RG188, 0.100 inch, PE-B100, PE-C100, LMR-100

Compliance Certifications (see product page for current document)

Plotted and Other Data

Notes:

MMCX Jack Connector Crimp/Solder Attachment for RG174, RG316, RG188, 0.100 inch, PE-B100, PE-C100, LMR-100 from Pasternack Enterprises has same day shipment for domestic and International orders. Our RF, microwave and millimeter wave products maintain a 99% availability and are part of the broadest selection in the industry.

Click the following link (or enter part number in "SEARCH" on website) to obtain additional part information including price, inventory and certifications: MMCX Jack Connector Crimp/Solder Attachment for RG174, RG316, RG188, 0.100 inch, PE-B100, PE-C100, LMR-100 PE4901

URL: https://www.pasternack.com/mmcx-jack-standard-rg174-rg316-rg188-connector-pe4901-p.aspx

The information contained in this document is accurate to the best of our knowledge and representative of the part described herein. It may be necessary to make modifications to the part and/or the documentation of the part, in order to implement improvements. Pasternack reserves the right to make such changes as required. Unless otherwise stated, all specifications are nominal. Pasternack does not make any representation or warranty regarding the suitability of the part described herein for any particular purpose, and Pasternack does not assume any liability arising out of the use of any part or documentation.

Pasternack Enterprises, Inc. • P.O. Box 16759, Irvine, CA 92623
Phone: (866) 727-8376 or (949) 261-1920 • **Fax:** (949) 261-7451
Sales@Pasternack.com • Techsupport@Pasternack.com

© 2016 Pasternack Enterprises All Rights Reserved

PE4901 CAD Drawing

MMCX Jack Connector Crimp/Solder Attachment for RG174, RG316, RG188, 0.100 inch, PE-B100, PE-C100, LMR-100

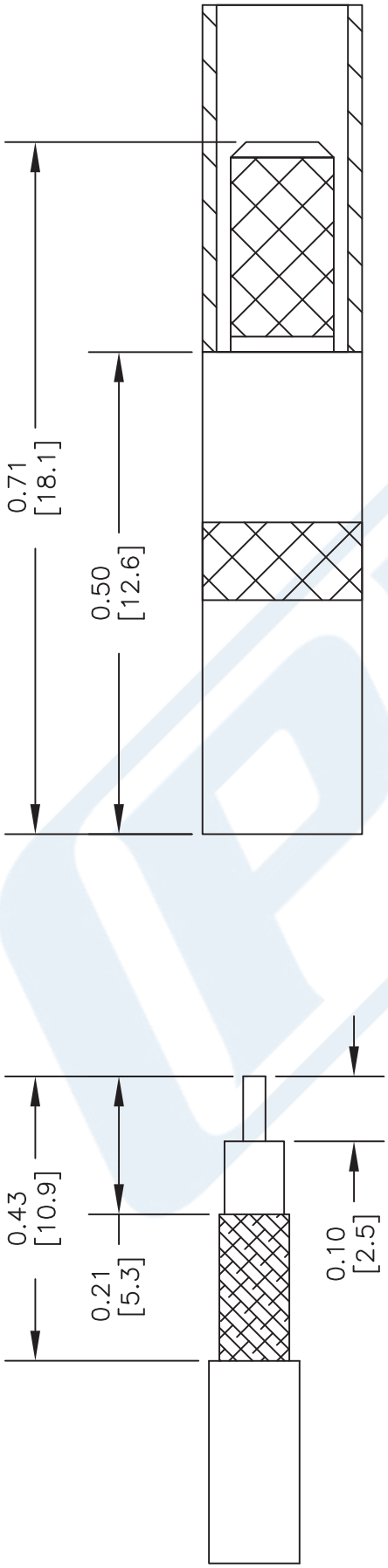

STRIPPING DIMENSIONS

CRIMP SIZE REQUIRED

CONTACT: SOLDER
FERRULE: .128" HEX CRIMP TOOL

NOTES:
1. UNLESS OTHERWISE SPECIFIED ALL DIMENSIONS ARE NOMINAL.
2. ALL SPECIFICATIONS ARE SUBJECT TO CHANGE WITHOUT NOTICE AT ANY TIME.
3. DIMENSIONS ARE IN INCHES [mm].
4. FITS MIL-C-17 AND EQUIVALENT CABLES.

DWG TITLE
PE4901

FSCM NO. 53919

CAD FILE 012413-A | SCALE N/A | SIZE A | 2233

PASTERNACK®
Pasternack Enterprises, Inc.
P.O. Box 16759 | Irvine | CA | 92623
Phone: (949) 261-1920 | **Fax:** (949) 261-7451
Website: www.pasternack.com | **E-Mail:** sales@pasternack.com

© 2016 Pasternack Enterprises All Rights Reserved

PASTERNACK
an INFINITE brand

MCX Plug Connector Crimp/Solder Attachment for RG316, RG174, RG188, LMR-100, PE-B100, PE-C100, 0.100 inch

RF Connectors
Technical Data Sheet

PE4551

Configuration

- MCX Plug Connector
- CECC 22220
- 50 Ohms
- Straight Body Geometry
- Connector Interface Types: RG316, RG174, RG188, LMR-100, PE-B100, PE-C100, .100 inch

Features

- Max. Operating Frequency 3 GHz
- Good VSWR of 1.3:1
- Gold Plated Brass Contact
- 30 µin minimum contact plating

Applications

- General Purpose Test
- Custom Cable Assemblies

Description

Pasternack's PE4551 MCX plug connector with crimp/solder attachment for RG316, RG174, RG188, LMR-100, PE-B100, PE-C100 and .100 inch is part of our full line of RF components available for same-day shipping. Our MCX plug connector operates up to a maximum frequency of 3 GHz and offers good VSWR of 1.3:1.

Our MCX plug connector PE4551 datasheet specifications and drawing with dimensions are shown below in this PDF. Pasternack's broad catalog of RF, microwave and millimeter wave connectors allows designers to configure and customize their signal connections however they like. Whether the need is to provide an I/O for a board design, or simply create a custom cable assembly configuration, Pasternack has the right connector for the job. Pasternack can also expertly build your custom cable assemblies for you and ship same-day.

Electrical Specifications

Description	Minimum	Typical	Maximum	Units
Frequency Range	DC		3	GHz
VSWR			1.3:1	
Operating Voltage (AC)			250	Vrms

Mechanical Specifications

Size

Length	0.79 in [20.07 mm]
Width/Dia.	0.217 in [5.51 mm]
Weight	0.009 lbs [4.08 g]

Click the following link (or enter part number in "SEARCH" on website) to obtain additional part information including price, inventory and certifications: MCX Plug Connector Crimp/Solder Attachment for RG316, RG174, RG188, LMR-100, PE-B100, PE-C100, 0.100 inch PE4551

Pasternack Enterprises, Inc. • P.O. Box 16759, Irvine, CA 92623
Phone: (866) 727-8376 or (949) 261-1920 • **Fax:** (949) 261-7451
Sales@Pasternack.com • Techsupport@Pasternack.com

© 2020 Pasternack Enterprises All Rights Reserved

MCX Plug Connector Crimp/Solder Attachment for RG316, RG174, RG188, LMR-100, PE-B100, PE-C100, 0.100 inch

Material Specifications

Description	Material	Plating
Contact	Brass	Gold 30 µin minimum
Insulation	PTFE	
Body	Brass	Nickel 100 µin minimum

Environmental Specifications

Temperature

Operating Range -55 to +155 deg C

Compliance Certifications (see product page for current document)

Plotted and Other Data

Notes:

MCX Plug Connector Crimp/Solder Attachment for RG316, RG174, RG188, LMR-100, PE-B100, PE-C100, 0.100 inch from Pasternack Enterprises has same day shipment for domestic and International orders. Our RF, microwave and millimeter wave products maintain a 99.4% availability and are part of the broadest selection in the industry.

Click the following link (or enter part number in “SEARCH” on website) to obtain additional part information including price, inventory and certifications: MCX Plug Connector Crimp/Solder Attachment for RG316, RG174, RG188, LMR-100, PE-B100, PE-C100, 0.100 inch PE4551

URL: https://www.pasternack.com/mcx-plug-standard-rg316-rg174-rg188-connector-pe4551-p.aspx

The information contained in this document is accurate to the best of our knowledge and representative of the part described herein. It may be necessary to make modifications to the part and/or the documentation of the part, in order to implement improvements. Pasternack reserves the right to make such changes as required. Unless otherwise stated, all specifications are nominal. Pasternack does not make any representation or warranty regarding the suitability of the part described herein for any particular purpose, and Pasternack does not assume any liability arising out of the use of any part or documentation.

Pasternack Enterprises, Inc. • P.O. Box 16759, Irvine, CA 92623
Phone: (866) 727-8376 or (949) 261-1920 • **Fax:** (949) 261-7451
Sales@Pasternack.com • Techsupport@Pasternack.com

© 2020 Pasternack Enterprises All Rights Reserved

PE4551 CAD Drawing

MCX Plug Connector Crimp/Solder Attachment for RG316, RG174, RG188, LMR-100, PE-B100, PE-C100, 0.100 inch

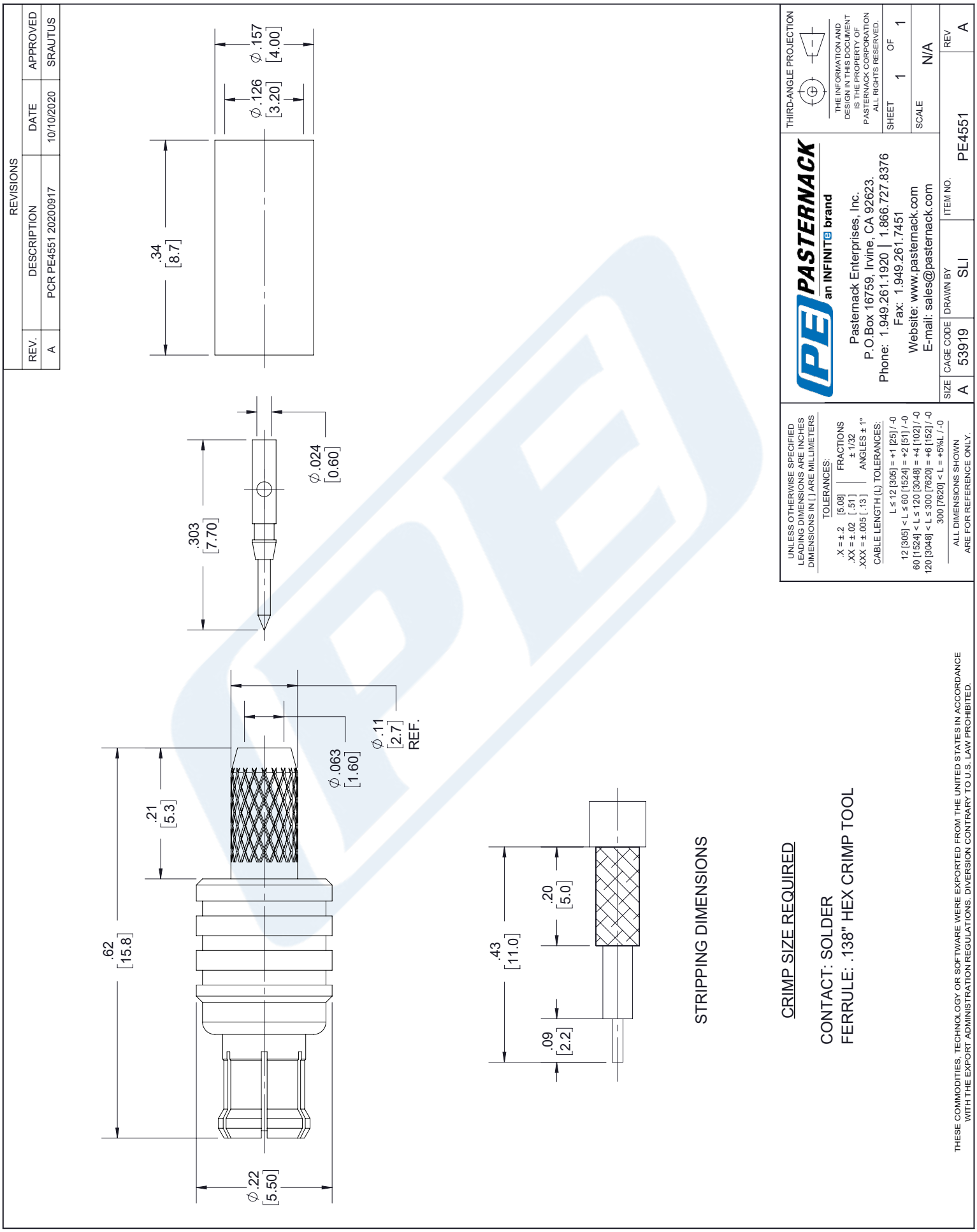

© 2020 Pasternack Enterprises All Rights Reserved

Flexible RG188 Coax Cable Single Shielded with White PTFE Jacket

RG188A/U

Configuration

- Flexible Cable
- 1 Shield(s)

Features

- High temperature 50 Ohm data signal transmission
- Teflon taped outer jacket results in a 200 degree C operating temperature
- Stranded center conductor allows cable to be very flexible
- Small diameter is ideal for tight fit applications
- Associated connectors and crimp tools available

Applications

- Ethernet
- Data
- Premise Wiring
- R&D

Description

RG188 coax cable from Pasternack is only one of a large number of radio frequency twinaxial and coaxial cable types specifically stocked to be ready for quick shipment. Pasternack's RG188A/U coax cable is manufactured in a flexible design and has a 50 Ohm impedance. This flexible 50 Ohm coax cable RG188 is constructed with a 0.11 inch diameter and PTFE jacket.

RG188 RG188A/U flexible 50 Ohm coax cable with PTFE jacket is rated for a 3 GHz maximum operating frequency. This 50 Ohm 0.11 inch diameter and flexible coax cable is built with a shield count of 1.

Pasternack's RG188 coax is constructed with PTFE dielectric and a maximum operating temperature of 250 degrees C. RG188 coax cable specs for this wire properties can be found on its RF coax cable RG-188 datasheet PDF specifications above.

RG188 cable is part of more than one million RF, microwave and millimeter wave parts in stock at Pasternack. This RG-188 coax cable is ready to buy and can be shipped worldwide. Pasternack also maintains a wide selection of other radio frequency twinaxial and coaxial cable types that ship same-day from our warehouse as with the rest of our other RF/microwave and millimeter wave components.

Electrical Specifications

Description	Minimum	Typical	Maximum	Units
Frequency Range	DC		3	GHz
Impedance		50		Ohms
Velocity of Propagation		70		% of c
Time Delay		1.45 [4.76]		ns/ft [ns/m]
Dielectric Withstanding Voltage (AC)			2,000	Vrms
Inner Conductor DC Resistance			84.1	Ohms/1000ft
Nominal Capacitance			29.3 [96.13]	pF/ft [pF/m]
Power@ 1GHz			160	Watts

Performance by Frequency Band

Description	F1	F2	F3	F4	F5	Units
Frequency	400					MHz

© 2023 Infinite Electronics, Inc. Pasternack is a registered trademark of Infinite Electronics, Inc.
+1 (866) 558-2786 | sales@pasternack.com | pasternack.com

Flexible RG188 Coax Cable Single Shielded with White PTFE Jacket

RG188A/U

Performance by Frequency Band

Description	F1	F2	F3	F4	F5	Units
Attenuation, Typ	20					dB/100ft
	65.62					dB/100m

Electrical Specification Notes:
Static Bending Radius: One Time: 0.52 inch, repeated: 1.03

Mechanical Specifications

Diameter	0.11 in [2.79 mm}
Weight	0.01 lbs/ft [0.01 kg/m]

Construction Specifications

Description	Material and Plating	Diameter
Inner Conductor	Copper Clad Steel, Silver, 7 Strands	0.02 in [0.51 mm]
Conductor Type	Stranded	
Dielectric	PTFE	0.06 in [1.52 mm]
First Shield	Silver Plated Copper Braid	0.081 in [2.06 mm]
	95.2% coverage	
Jacket	PTFE, White	0.11 in [2.79 mm]

Environmental Specifications

Temperature

Operating Range	-55 to 200 deg C

Compliance Certifications (see product page for current document)

Plotted and Other Data

Notes:

© 2023 Infinite Electronics, Inc. Pasternack is a registered trademark of Infinite Electronics, Inc.
+1 (866) 558-2786 | sales@pasternack.com | pasternack.com

Flexible RG188 Coax Cable Single Shielded with White PTFE Jacket

RG188A/U

Flexible RG188 Coax Cable Single Shielded with White PTFE Jacket from Pasternack Enterprises has same day shipment for domestic and International orders. Our RF, microwave and millimeter wave products maintain a 99.4% availability and are part of the broadest selection in the industry.

Click the following link (or enter part number in "SEARCH" on website) to obtain additional part information including price, inventory and certifications: Flexible RG188 Coax Cable Single Shielded with White PTFE Jacket RG188A/U

URL: https://www.pasternack.com/50-ohm-flexible-rg188au-ptfe-jacket-silver-plated-copper-braid-outer-conductor-single-shielded-white-rg188a-u-p.aspx

The information contained within this document is accurate to the best of our knowledge and representative of the part described herein. It may be necessary to make modifications to the part and/or the documentation of the part in order to impliment improvements. Pasternack Enterprises reserves the right to make such changes as required. Unless otherwise stated, all specifications are nominal. Pasternack Enterprises does not make any representation or warranty regarding the suitability of the part described herein for any particular purpose, and Pasternack Enterprises does not assume liability arising out of the use of any part or document.

© 2023 Infinite Electronics, Inc. Pasternack is a registered trademark of Infinite Electronics, Inc.

RG188A/U CAD Drawing

Flexible RG188 Coax Cable Single Shielded with White PTFE Jacket

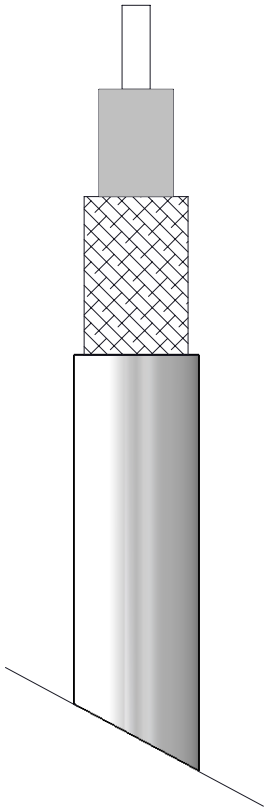

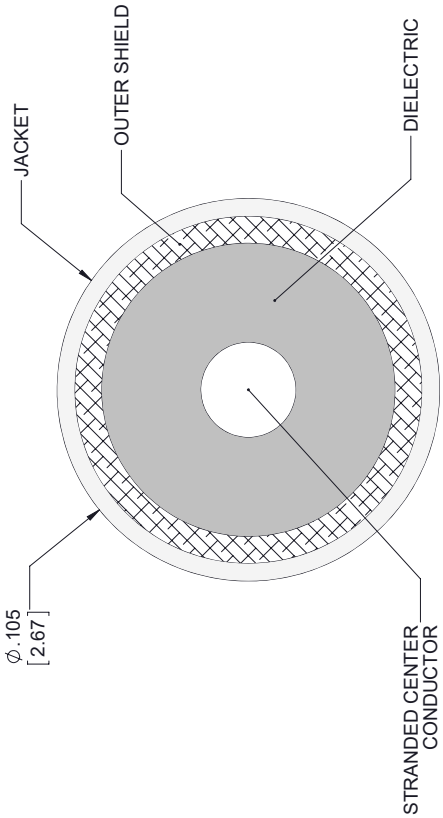

SECTION VIEW

STANDARD TOLERANCES	
.X	±0.2
.XX	±0.01
.XXX	±0.005

*STANDARD TOLERANCES APPLY ONLY TO DIMENSIONS IN INCHES

NOTES:
1. UNLESS OTHERWISE SPECIFIED ALL DIMENSIONS ARE NOMINAL.
2. ALL SPECIFICATIONS ARE SUBJECT TO CHANGE WITHOUT NOTICE AT ANY TIME.
3. DIMENSIONS ARE IN INCHES [mm].

DWG TITLE
RG188A/U

CAD FILE 091817 | SCALE N/A | SIZE A | 7361

CAGE CODE 53919

PASTERNACK®
THE ENGINEER'S RF SOURCE
Pasternack Enterprises, Inc.
P.O. Box 16759 | Irvine | CA | 92623
Phone: (949) 261-1920 | **Fax:** (949) 261-7451
Website: www.pasternack.com | **E-Mail:** sales@pasternack.com

© 2023 Infinite Electronics, Inc. Pasternack is a registered trademark of Infinite Electronics, Inc.