PASTERNACK
an INFINITE brand

HN Male Connector Clamp/Solder Attachment for RG58, RG55, RG141, RG142, RG223, RG400, RG303, PE-C195, PE-P195, LMR-195

RF Connectors
Technical Data Sheet

PE4198

Configuration

- HN Male Connector
- MIL-STD-348A
- 50 Ohms
- Straight Body Geometry
- Connector Interface Types: RG58, RG55, RG141, RG142, RG223, RG400, RG303, PE-C195, PE-P195, LMR-195

Features

- Max. Operating Frequency 3 GHz
- Good VSWR of 1.35:1
- Gold Plated Brass Contact
- 30 µin minimum contact plating

Applications

- General Purpose Test
- Custom Cable Assemblies

Description

Pasternack's PE4198 HN male connector with clamp/solder attachment for RG58, RG55, RG141, RG142, RG223, RG400, RG303, PE-C195, PE-P195 and LMR-195 is part of our full line of RF components available for same-day shipping. Our HN male connector operates up to a maximum frequency of 3 GHz and offers good VSWR of 1.35:1.

Our HN male connector PE4198 datasheet specifications and drawing with dimensions are shown below in this PDF. Pasternack's broad catalog of RF, microwave and millimeter wave connectors allows designers to configure and customize their signal connections however they like. Whether the need is to provide an I/O for a board design, or simply create a custom cable assembly configuration, Pasternack has the right connector for the job. Pasternack can also expertly build your custom cable assemblies for you and ship same-day.

Electrical Specifications

Description	Minimum	Typical	Maximum	Units
Frequency Range	DC		3	GHz
VSWR			1.35:1	
Operating Voltage (AC)			1,400	Vrms

Mechanical Specifications

Size

Length	1.407 in [35.74 mm]
Width/Dia.	0.866 in [22.00 mm]
Weight	0.097 lbs [44 g]

Click the following link (or enter part number in "SEARCH" on website) to obtain additional part information including price, inventory and certifications: HN Male Connector Clamp/Solder Attachment for RG58, RG55, RG141, RG142, RG223, RG400, RG303, PE-C195, PE-P195, LMR-195 PE4198

Pasternack Enterprises, Inc. • P.O. Box 16759, Irvine, CA 92623
Phone: (866) 727-8376 or (949) 261-1920 • **Fax:** (949) 261-7451
Sales@Pasternack.com • Techsupport@Pasternack.com

© 2019 Pasternack Enterprises All Rights Reserved

HN Male Connector Clamp/Solder Attachment for RG58, RG55, RG141, RG142, RG223, RG400, RG303, PE-C195, PE-P195, LMR-195

Material Specifications

Description	Material	Plating
Contact	Brass	Gold 30 µin minimum
Insulation	PTFE	
Body	Brass	Nickel 100 µin minimum
Coupling Nut	Brass	Nickel 100 µin minimum

Mechanical Specification Notes:
When attaching the connector to the cable use a clamp torque value of 26 to 30 in-lbs [2.94 to 3.39 Nm]

Environmental Specifications

Temperature

Operating Range -65 to +165 deg C

Compliance Certifications (see product page for current document)

Plotted and Other Data

Notes:

HN Male Connector Clamp/Solder Attachment for RG58, RG55, RG141, RG142, RG223, RG400, RG303, PE-C195, PE-P195, LMR-195 from Pasternack Enterprises has same day shipment for domestic and International orders. Our RF, microwave and millimeter wave products maintain a 99.4% availability and are part of the broadest selection in the industry.

Click the following link (or enter part number in “SEARCH” on website) to obtain additional part information including price, inventory and certifications: HN Male Connector Clamp/Solder Attachment for RG58, RG55, RG141, RG142, RG223, RG400, RG303, PE-C195, PE-P195, LMR-195 PE4198

URL: https://www.pasternack.com/hn-male-standard-rg58-rg55-rg141-rg142-rg223-rg400-connector-pe4198-p.aspx

The information contained in this document is accurate to the best of our knowledge and representative of the part described herein. It may be necessary to make modifications to the part and/or the documentation of the part, in order to implement improvements. Pasternack reserves the right to make such changes as required. Unless otherwise stated, all specifications are nominal. Pasternack does not make any representation or warranty regarding the suitability of the part described herein for any particular purpose, and Pasternack does not assume any liability arising out of the use of any part or documentation.

Pasternack Enterprises, Inc. • P.O. Box 16759, Irvine, CA 92623
Phone: (866) 727-8376 or (949) 261-1920 • **Fax:** (949) 261-7451
Sales@Pasternack.com • Techsupport@Pasternack.com

© 2019 Pasternack Enterprises All Rights Reserved

PE4198 CAD Drawing

HN Male Connector Clamp/Solder Attachment for RG58, RG55, RG141, RG142, RG223, RG400, RG303, PE-C195, PE-P195, LMR-195

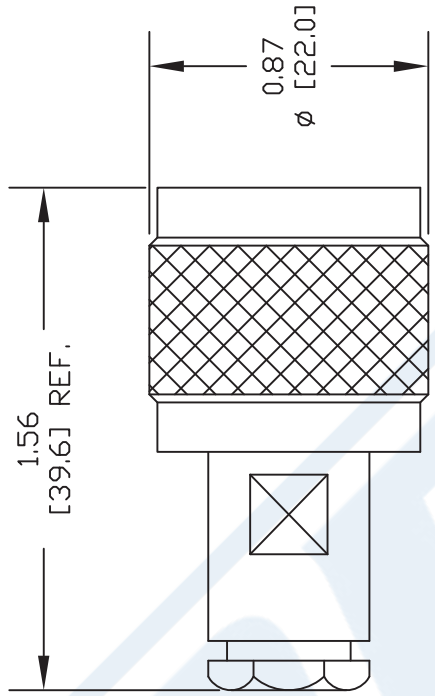

ASSEMBLY PROCEDURES

1. SLIDE CLAMP NUT (1) & GASKET (2) OVER CABLE. DO NOT NICK BRAID WHILE CUTTING JACKET. TAPER END OF BRAID TO PERMIT ASSEMBLY OF BRAID CLAMP (3) SLIDE BRAID CLAMP(3) OVER BRAID & SEAT AGAINST CABLE.

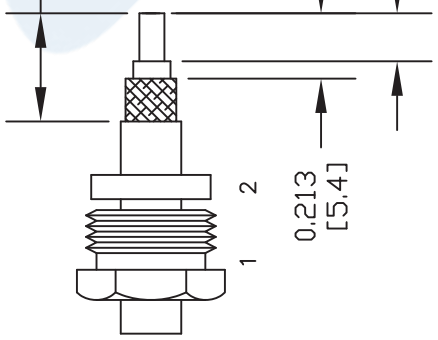

2. FORM BRAID OVER CLAMP NUT (3). TRIM BRAID BACK TO SHOULDER. SOLDER CONTACT TO CENTER CONDUCTOR. REMOVE EXCESS SOLDER. DO NOT OVER HEAT DIELECTRIC. INSERT CABLE ASSEMBLY INTO BODY & TIGHTEN.

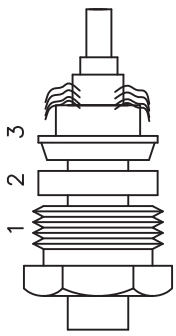

NOTES:
1. UNLESS OTHERWISE SPECIFIED ALL DIMENSIONS ARE NOMINAL.
2. ALL SPECIFICATIONS ARE SUBJECT TO CHANGE WITHOUT NOTICE AT ANY TIME.
3. DIMENSIONS ARE IN INCHES [mm].
4. FITS MIL-C-17 AND EQUIVALENT CABLES.

DWG TITLE **PE4198**

REV. B	FSCM NO. 53919	CAD FILE 072512	SCALE N/A	SIZE A	2231

PASTERNACK®
Pasternack Enterprises, Inc.
P.O. Box 16759 | Irvine | CA | 92623
Phone: (949) 261-1920 | **Fax:** (949) 261-7451
Website: www.pasternack.com | **E-Mail:** sales@pasternack.com

© 2019 Pasternack Enterprises All Rights Reserved

PASTERNACK
an INFINITE brand

N Male Right Angle Connector Clamp/Solder Attachment for RG58, RG55, RG141, RG142, RG223, RG400, RG303, PE-C195, PE-P195, LMR-195

RF Connectors
Technical Data Sheet

PE4135

Configuration

- N Male Connector
- MIL-STD-348A
- 50 Ohms
- Right Angle Body Geometry
- Connector Interface Types: RG58, RG55, RG141, RG142, RG223, RG400, RG303, PE-C195, PE-P195, LMR-195

Features

- Max. Operating Frequency 1 GHz
- Good VSWR of 1.35:1
- Gold Plated Brass Contact
- 30 µin minimum contact plating

Applications

- General Purpose Test
- Custom Cable Assemblies

Description

Pasternack's PE4135 type N male right angle connector with clamp/solder attachment for RG58, RG55, RG141, RG142, RG223, RG400, RG303, PE-C195, PE-P195 and LMR-195 is part of our full line of RF components available for same-day shipping. Our type N male connector operates up to a maximum frequency of 1 GHz and offers good VSWR of 1.35:1. Its right angle body geometry allows for easier connections in tight spaces.

Our type N male right angle connector PE4135 datasheet specifications and drawing with dimensions are shown below in this PDF. Pasternack's broad catalog of RF, microwave and millimeter wave connectors allows designers to configure and customize their signal connections however they like. Whether the need is to provide an I/O for a board design, or simply create a custom cable assembly configuration, Pasternack has the right connector for the job. Pasternack can also expertly build your custom cable assemblies for you and ship same-day.

Electrical Specifications

Description	Minimum	Typical	Maximum	Units
Frequency Range	DC		1,000	MHz
VSWR			1.35:1	
Operating Voltage (AC)			1,000	Vrms

Mechanical Specifications

Size	
Length	1.35 in [34.29 mm]
Width/Dia.	0.827 in [21.01 mm]
Height	1.15 in [29.21 mm]
Weight	0.115 lbs [52.16 g]

Click the following link (or enter part number in "SEARCH" on website) to obtain additional part information including price, inventory and certifications: N Male Right Angle Connector Clamp/Solder Attachment for RG58, RG55, RG141, RG142, RG223, RG400, RG303, PE-C195, PE-P195, LMR-195 PE4135

Pasternack Enterprises, Inc. • P.O. Box 16759, Irvine, CA 92623
Phone: (866) 727-8376 or (949) 261-1920 • **Fax:** (949) 261-7451
Sales@Pasternack.com • Techsupport@Pasternack.com

© 2020 Pasternack Enterprises All Rights Reserved

N Male Right Angle Connector Clamp/Solder Attachment for RG58, RG55, RG141, RG142, RG223, RG400, RG303, PE-C195, PE-P195, LMR-195

Material Specifications

Description	Material	Plating
Contact	Brass	Gold 30 µin minimum
Insulation	PTFE	
Body	Brass	Nickel 100 µin minimum
Coupling Nut	Brass	Nickel 100 µin minimum

Mechanical Specification Notes:
When attaching the connector to the cable use a clamp torque value of 26 to 30 in-lbs [2.94 to 3.39 Nm]

Environmental Specifications

Temperature

Operating Range -65 to +165 deg C

Compliance Certifications (see product page for current document)

Plotted and Other Data

Notes:

N Male Right Angle Connector Clamp/Solder Attachment for RG58, RG55, RG141, RG142, RG223, RG400, RG303, PE-C195, PE-P195, LMR-195 from Pasternack Enterprises has same day shipment for domestic and International orders. Our RF, microwave and millimeter wave products maintain a 99.4% availability and are part of the broadest selection in the industry.

Click the following link (or enter part number in “SEARCH” on website) to obtain additional part information including price, inventory and certifications: N Male Right Angle Connector Clamp/Solder Attachment for RG58, RG55, RG141, RG142, RG223, RG400, RG303, PE-C195, PE-P195, LMR-195 PE4135

URL: https://www.pasternack.com/n-male-rg58-rg55-rg141-rg142-rg223-rg400-connector-pe4135-p.aspx

The information contained in this document is accurate to the best of our knowledge and representative of the part described herein. It may be necessary to make modifications to the part and/or the documentation of the part, in order to implement improvements. Pasternack reserves the right to make such changes as required. Unless otherwise stated, all specifications are nominal. Pasternack does not make any representation or warranty regarding the suitability of the part described herein for any particular purpose, and Pasternack does not assume any liability arising out of the use of any part or documentation.

Pasternack Enterprises, Inc. • P.O. Box 16759, Irvine, CA 92623
Phone: (866) 727-8376 or (949) 261-1920 • **Fax:** (949) 261-7451
Sales@Pasternack.com • Techsupport@Pasternack.com

© 2020 Pasternack Enterprises All Rights Reserved

PE4135 CAD Drawing

N Male Right Angle Connector Clamp/Solder Attachment for RG58, RG55, RG141, RG142, RG223, RG400, RG303, PE-C195, PE-P195, LMR-195

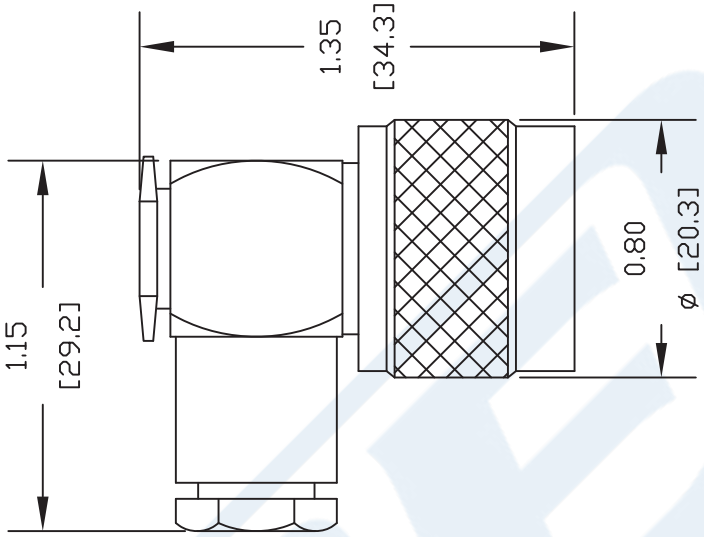

ASSEMBLY PROCEDURES

1. SLIDE CLAMP NUT (1), WASHER (2) & GASKET (3) OVER CABLE. STRIP CABLE AS SHOWN. DO NOT NICK BRAID WHILE CUTTING JACKET. TAPER END OF BRAID TO PERMIT ASSEMBLY OF BRAID CLAMP (4). SLIDE BRAID CLAMP (4) OVER BRAID & SEAT AGAINST CABLE.

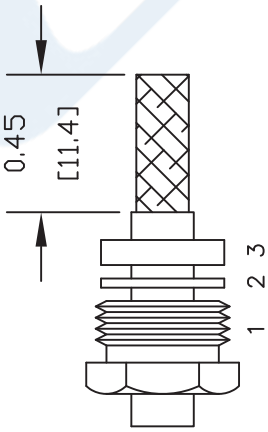

2. FORM BRAID OVER CLAMP NUT (4). CUT DIELECTRIC TO DIMENSION SHOWN. DO NOT NICK CENTER CONDUCTOR. TIN CENTER CONDUCTOR. SLIDE ASSEMBLY INTO BODY, SOLDER CENTER CONDUCTOR IN PLACE & TIGHTEN CLAMP NUT. SCREW CAP DOWN INTO PLACE.

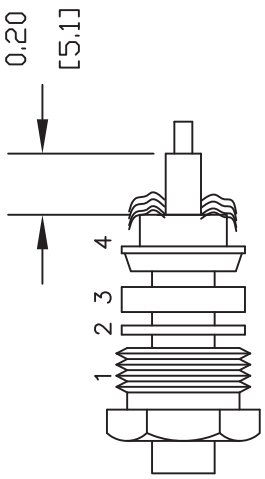

NOTES:
1. UNLESS OTHERWISE SPECIFIED ALL DIMENSIONS ARE NOMINAL.
2. ALL SPECIFICATIONS ARE SUBJECT TO CHANGE WITHOUT NOTICE AT ANY TIME.
3. DIMENSIONS ARE IN INCHES [mm].
4. FITS MIL-C-17 AND EQUIVALENT CABLES.

DWG TITLE	REV. -	FSCM NO. 53919	CAD FILE 042309	SCALE N/A	SIZE A	147
PE4135						

PASTERNACK®
Pasternack Enterprises, Inc.
P.O. Box 16759 | Irvine | CA | 92623
Phone: (949) 261-1920 | **Fax:** (949) 261-7451
Website: www.pasternack.com | **E-Mail:** sales@pasternack.com

© 2020 Pasternack Enterprises All Rights Reserved

PASTERNACK®
THE ENGINEER'S RF SOURCE

Low Loss Flexible PE-P195 Coax Cable Triple Shielded with Tan FEP Jacket

RF Cables
Technical Data Sheet

PE-P195

Configuration

- Low Loss Flexible Cable
- 3 Shield(s)

Electrical Specifications

Description	Minimum	Typical	Maximum	Units
Frequency Range	DC		22	GHz
Impedance		50		Ohms
Velocity of Propagation		70		%
Operating Voltage (AC)			1,900	Vrms
Dielectric Withstanding Voltage (AC)			5,000	Vrms
Nominal Capacitance		29 [95.14]		pF/ft [pF/m]

Performance by Frequency Band

Description	F1	F2	F3	F4	F5	Units
Frequency	0.1	0.5	1	5	10	GHz
Attenuation, Typ	3.9	8.8	12.5	31.5	45	dB/100ft
	12.8	28.87	41.01	103.35	147.64	dB/100m

Description	F6	F7	F8	F9	F10	Units
Frequency	15	18	20	22		GHz
Attenuation, Typ	58	65	69	73		dB/100ft
	190.29	213.25	226.38	239.5		dB/100m

Mechanical Specifications

Diameter	0.195 in [4.95 mm]
Weight	0.038 lbs/ft [0.06 Kg/m]
Min. Bend Radius (Repeated)	1 in [25.4 mm]

Click the following link (or enter part number in "SEARCH" on website) to obtain additional part information including price, inventory and certifications: Low Loss Flexible PE-P195 Coax Cable Triple Shielded with Tan FEP Jacket PE-P195

Pasternack Enterprises, Inc. • P.O. Box 16759, Irvine, CA 92623
Phone: (866) 727-8376 or (949) 261-1920 • **Fax:** (949) 261-7451
Sales@Pasternack.com • Techsupport@Pasternack.com

© 2018 Pasternack Enterprises All Rights Reserved

Low Loss Flexible PE-P195 Coax Cable Triple Shielded with Tan FEP Jacket

Construction Specifications

Description	Material and Plating	Diameter
Inner Conductor	Copper Clad Steel, Silver, 1 Strands	0.037 in [0.94 mm]
Conductor Type	Solid	
Dielectric	PTFE	0.116 in [2.95 mm]
First Shield	Silver Plated Copper Braid 96% coverage	0.126 in [3.2 mm]
Second Shield	Aluminum Tape	0.132 in [3.35 mm]
Third Shield	Silver Plated Copper Braid 96% coverage	0.155 in [3.94 mm]
Jacket	FEP, Tan	0.195 in [4.95 mm]

Environmental Specifications

Temperature

Operating Range -55 to +200 deg C

Compliance Certifications (see product page for current document)

Plotted and Other Data

Notes:

Low Loss Flexible PE-P195 Coax Cable Triple Shielded with Tan FEP Jacket from Pasternack Enterprises has same day shipment for domestic and International orders. Our RF, microwave and millimeter wave products maintain a 99.4% availability and are part of the broadest selection in the industry.

Click the following link (or enter part number in "SEARCH" on website) to obtain additional part information including price, inventory and certifications: Low Loss Flexible PE-P195 Coax Cable Triple Shielded with Tan FEP Jacket PE-P195

URL: https://www.pasternack.com/precision-0.195-rg142-solid-center-conductor-52-ohm-coax-cable-fep-jacket-pe-p195-p.aspx

The information contained in this document is accurate to the best of our knowledge and representative of the part described herein. It may be necessary to make modifications to the part and/or the documentation of the part, in order to implement improvements. Pasternack reserves the right to make such changes as required. Unless otherwise stated, all specifications are nominal. Pasternack does not make any representation or warranty regarding the suitability of the part described herein for any particular purpose, and Pasternack does not assume any liability arising out of the use of any part or documentation.

Pasternack Enterprises, Inc. • P.O. Box 16759, Irvine, CA 92623
Phone: (866) 727-8376 or (949) 261-1920 • **Fax:** (949) 261-7451
Sales@Pasternack.com • Techsupport@Pasternack.com

© 2018 Pasternack Enterprises All Rights Reserved

PE-P195 CAD Drawing

Low Loss Flexible PE-P195 Coax Cable Triple Shielded with Tan FEP Jacket

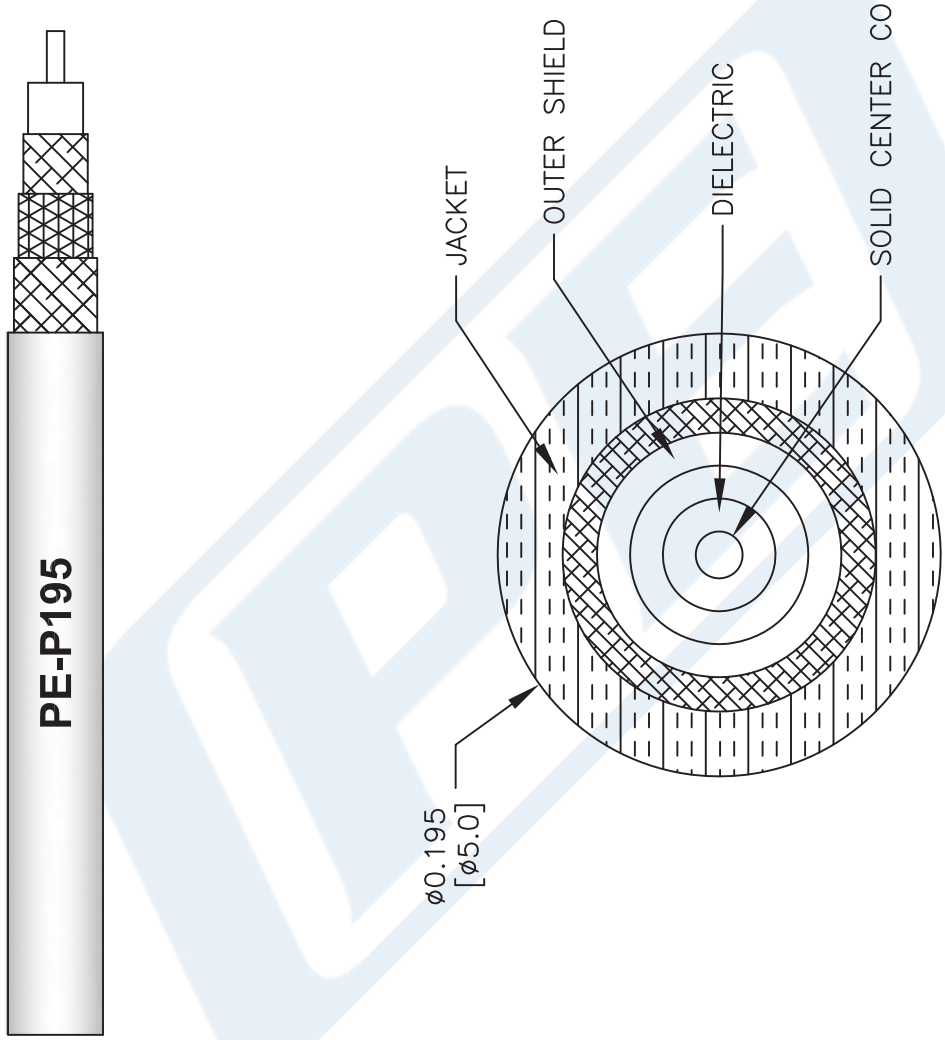

NOTES:
1. UNLESS OTHERWISE SPECIFIED ALL DIMENSIONS ARE NOMINAL.
2. ALL SPECIFICATIONS ARE SUBJECT TO CHANGE WITHOUT NOTICE AT ANY TIME.
3. DIMENSIONS ARE IN INCHES [mm].

DWG TITLE
PE-P195

CAD FILE 111716 | SCALE N/A | SIZE A | 41742

FSCM NO. 53919

PASTERNACK®
THE ENGINEER'S RF SOURCE
Pasternack Enterprises, Inc.
P.O. Box 16759 | Irvine | CA | 92623
Phone: (949) 261-1920 | **Fax:** (949) 261-7451
Website: www.pasternack.com | **E-Mail:** sales@pasternack.com

© 2018 Pasternack Enterprises All Rights Reserved