PASTERNACK
an INFINITE brand

2.2-5 Male Low PIM Connector Solder Attachment for PE-1/4SFHC, SPP-250-LLPL, SPO-250, SPF-250

RF Connectors
Technical Data Sheet

PE45673

Configuration

- 2.2-5 Male Connector
- 50 Ohms
- Straight Body Geometry
- Connector Interface Types: PE-1/4SFHC, SPP-250-LL-PL, SPO-250, SPF-250
- Low PIM Design

Features

- Max. Operating Frequency 6 GHz
- PIM levels lower than -155 dBc
- Silver Plated Brass Contact

Applications

- General Purpose Test
- Wireless Communications
- Custom Cable Assemblies
- Low PIM Applications

Description

Pasternack's PE45673 , 2.2-5, Low PIM, Connector is part of our full line of RF components available for same-day shipping. Our 2.2-5 male connector operates up to a maximum frequency of 6 GHz. The 2.2-5 male connector also has low passive intermodulation of -155 dBc.

Our 2.2-5 male connector PE45673 datasheet specifications and drawing with dimensions are shown below in this PDF. Pasternack's broad catalog of RF, microwave and millimeter wave connectors allows designers to configure and customize their signal connections however they like. Whether the need is to provide an I/O for a board design, or simply create a custom cable assembly configuration, Pasternack has the right connector for the job. Pasternack can also expertly build your custom cable assemblies for you and ship same-day.

Electrical Specifications

Description	Minimum	Typical	Maximum	Units
Frequency Range	DC		6	GHz
Passive Intermodulation			-155	dBc
Impedance		50		Ohms
Dielectric Withstanding Voltage (AC)			750	Vrms

Performance by Frequency

Description	F1	F2	F3	F4	F5	Units
Frequency Range	DC to 3	3 to 6				GHz
VSWR, Max	1.15:1	1.25:1				

Click the following link (or enter part number in "SEARCH" on website) to obtain additional part information including price, inventory and certifications: 2.2-5 Male Low PIM Connector Solder Attachment for PE-1/4SFHC, SPP-250-LLPL, SPO-250, SPF-250 PE45673

Pasternack Enterprises, Inc. • P.O. Box 16759, Irvine, CA 92623
Phone: (866) 727-8376 or (949) 261-1920 • **Fax:** (949) 261-7451
Sales@Pasternack.com • Techsupport@Pasternack.com

© 2020 Pasternack Enterprises All Rights Reserved

PASTERNACK
an INFINITE brand

2.2-5 Male Low PIM Connector Solder Attachment for PE-1/4SFHC, SPP-250-LLPL, SPO-250, SPF-250

RF Connectors
Technical Data Sheet

PE45673

Mechanical Specifications

Size

Length	0.89 in [22.61 mm]
Width	0.69 in [17.53 mm]
Height	0.69 in [17.53 mm]
Weight	0.05 lbs [22.68 g]

Material Specifications

Description	Material	Plating
Contact	Brass	Silver
Insulation	PTFE	
Body	Brass	Tri-Metal
Coupling Nut	Brass	Tri-Metal
O-Ring	Silicone	

Environmental Specifications

Temperature

Operating Range	-40 to +155 deg C

Compliance Certifications (see product page for current document)

Plotted and Other Data

Notes:

2.2-5 Male Low PIM Connector Solder Attachment for PE-1/4SFHC, SPP-250-LLPL, SPO-250, SPF-250 from Pasternack Enterprises has same day shipment for domestic and International orders. Our RF, microwave and millimeter wave products maintain a 99.4% availability and are part of the broadest selection in the industry.

Click the following link (or enter part number in “SEARCH” on website) to obtain additional part information including price, inventory and certifications: 2.2-5 Male Low PIM Connector Solder Attachment for PE-1/4SFHC, SPP-250-LLPL, SPO-250, SPF-250 PE45673

URL: https://www.pasternack.com/2.2-5-male-pe-1-4sfhc-spp-250-llpl-connector-pe45673-p.aspx

The information contained in this document is accurate to the best of our knowledge and representative of the part described herein. It may be necessary to make modifications to the part and/or the documentation of the part, in order to implement improvements. Pasternack reserves the right to make such changes as required. Unless otherwise stated, all specifications are nominal. Pasternack does not make any representation or warranty regarding the suitability of the part described herein for any particular purpose, and Pasternack does not assume any liability arising out of the use of any part or documentation.

Pasternack Enterprises, Inc. • P.O. Box 16759, Irvine, CA 92623
Phone: (866) 727-8376 or (949) 261-1920 • **Fax:** (949) 261-7451
Sales@Pasternack.com • Techsupport@Pasternack.com

© 2020 Pasternack Enterprises All Rights Reserved

PE45673 CAD Drawing

2.2-5 Male Low PIM Connector Solder Attachment for PE-1/4SFHC, SPP-250-LLPL, SPO-250, SPF-250

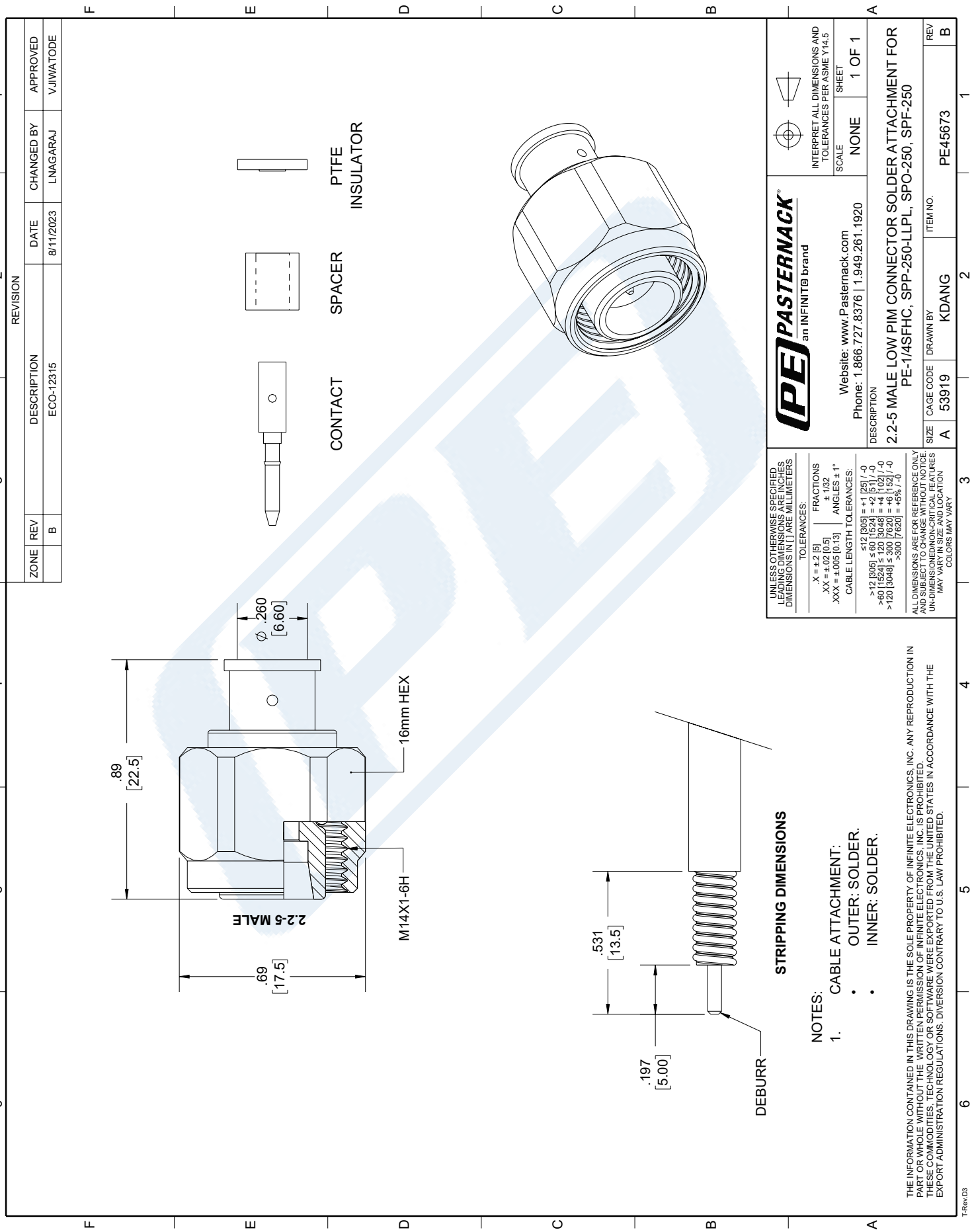

© 2020 Pasternack Enterprises All Rights Reserved

PASTERNACK
an INFINITE brand

N Male Right Angle Low PIM Connector Solder Attachment for PE-1/4SFHC, SPP-250-LLPL, SPO-250, SPF-250

RF Connectors
Technical Data Sheet

PE45665

Configuration

- N Male Connector
- 50 Ohms
- Right Angle Body Geometry
- Connector Interface Types: PE-1/4SFHC, SPP-250-LL-PL, SPO-250, SPF-250
- Low PIM Design

Features

- Max. Operating Frequency 6 GHz
- PIM levels lower than -160 dBc
- Silver Plated Brass Contact

Applications

- General Purpose Test
- Wireless Communications
- Custom Cable Assemblies
- Low PIM Applications

Description

Pasternack's PE45665 type N male right angle connector with solder/solder attachment for PE-1/4SFHC, SPP-250-LLPL, SPO-250 and SPF-250 is part of our full line of RF components available for same-day shipping. Our type N male connector operates up to a maximum frequency of 6 GHz. The type N male connector also has low passive intermodulation of -160 dBc. Its right angle body geometry allows for easier connections in tight spaces.

Our type N male right angle connector PE45665 datasheet specifications and drawing with dimensions are shown below in this PDF. Pasternack's broad catalog of RF, microwave and millimeter wave connectors allows designers to configure and customize their signal connections however they like. Whether the need is to provide an I/O for a board design, or simply create a custom cable assembly configuration, Pasternack has the right connector for the job. Pasternack can also expertly build your custom cable assemblies for you and ship same-day.

Electrical Specifications

Description	Minimum	Typical	Maximum	Units
Frequency Range	DC		6	GHz
Passive Intermodulation			-160	dBc
Dielectric Withstanding Voltage (AC)			750	Vrms

Performance by Frequency

Description	F1	F2	F3	F4	F5	Units
Frequency Range	DC to 3	3 to 6				GHz
VSWR, Max	1.25:1	1.35:1				

Click the following link (or enter part number in "SEARCH" on website) to obtain additional part information including price, inventory and certifications: N Male Right Angle Low PIM Connector Solder Attachment for PE-1/4SFHC, SPP-250-LLPL, SPO-250, SPF-250 PE45665

Pasternack Enterprises, Inc. • P.O. Box 16759, Irvine, CA 92623
Phone: (866) 727-8376 or (949) 261-1920 • **Fax:** (949) 261-7451
Sales@Pasternack.com • Techsupport@Pasternack.com

© 2020 Pasternack Enterprises All Rights Reserved

N Male Right Angle Low PIM Connector Solder Attachment for PE-1/4SFHC, SPP-250-LLPL, SPO-250, SPF-250

RF Connectors
Technical Data Sheet

PE45665

Mechanical Specifications

Size

Length	1.23 in [31.24 mm]
Width/Dia.	0.85 in [21.59 mm]
Weight	0.11 lbs [49.9 g]

Material Specifications

Description	Material	Plating
Contact	Brass	Silver
Insulation	PTFE	
Body	Brass	Tri-Metal
Coupling Nut	Brass	Tri-Metal

Mechanical Specification Notes:
Interface Conforms to IEC 61169-16

Environmental Specifications

Temperature

Operating Range	-40 to +155 deg C

Compliance Certifications (see product page for current document)

Plotted and Other Data

Notes:

Click the following link (or enter part number in “SEARCH” on website) to obtain additional part information including price, inventory and certifications: N Male Right Angle Low PIM Connector Solder Attachment for PE-1/4SFHC, SPP-250-LLPL, SPO-250, SPF-250 PE45665

Pasternack Enterprises, Inc. • P.O. Box 16759, Irvine, CA 92623
Phone: (866) 727-8376 or (949) 261-1920 • **Fax:** (949) 261-7451
Sales@Pasternack.com • Techsupport@Pasternack.com

© 2020 Pasternack Enterprises All Rights Reserved

N Male Right Angle Low PIM Connector Solder Attachment for PE-1/4SFHC, SPP-250-LLPL, SPO-250, SPF-250

RF Connectors
Technical Data Sheet

PE45665

N Male Right Angle Low PIM Connector Solder Attachment for PE-1/4SFHC, SPP-250-LLPL, SPO-250, SPF-250 from Pasternack Enterprises has same day shipment for domestic and International orders. Our RF, microwave and millimeter wave products maintain a 99.4% availability and are part of the broadest selection in the industry.

Click the following link (or enter part number in “SEARCH” on website) to obtain additional part information including price, inventory and certifications: N Male Right Angle Low PIM Connector Solder Attachment for PE-1/4SFHC, SPP-250-LLPL, SPO-250, SPF-250 PE45665

URL: https://www.pasternack.com/n-male-pe-1-4sfhc-spp-250-llpl-connector-pe45665-p.aspx

The information contained in this document is accurate to the best of our knowledge and representative of the part described herein. It may be necessary to make modifications to the part and/or the documentation of the part, in order to implement improvements. Pasternack reserves the right to make such changes as required. Unless otherwise stated, all specifications are nominal. Pasternack does not make any representation or warranty regarding the suitability of the part described herein for any particular purpose, and Pasternack does not assume any liability arising out of the use of any part or documentation.

Pasternack Enterprises, Inc. • P.O. Box 16759, Irvine, CA 92623
Phone: (866) 727-8376 or (949) 261-1920 • **Fax:** (949) 261-7451
Sales@Pasternack.com • Techsupport@Pasternack.com

© 2020 Pasternack Enterprises All Rights Reserved

PE45665 CAD Drawing

N Male Right Angle Low PIM Connector Solder Attachment for
PE-1/4SFHC, SPP-250-LLPL, SPO-250, SPF-250

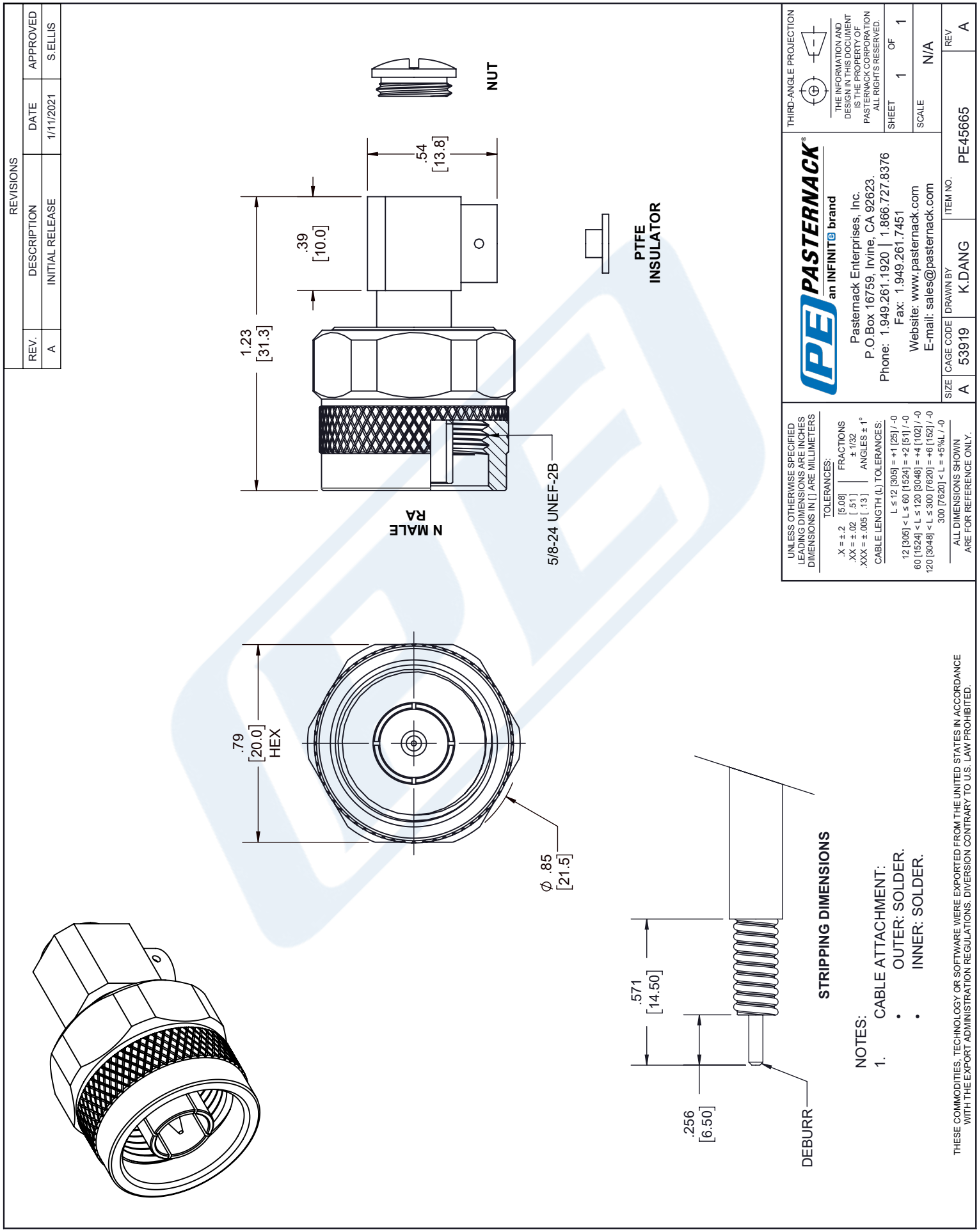

© 2020 Pasternack Enterprises All Rights Reserved

PASTERNACK
an INFINITE brand

Low Loss SPF-250 Rated Corrugated Coax Cable with Black FRPE Jacket Superflexible Fire Rated

RF Cables
Technical Data Sheet

TIMES MICROWAVE SYSTEMS

SPF-250

Times Microwave Systems Coax Cable Specification

Configuration

- Low Loss Corrugated Cable
- 1 Shield(s)

Features

- PIM < -160 dBc
- UL Listed, Type CMR Riser Rated Cable
- Lightweight and Extremely Flexible
- Low Loss Dielectric 83% VoP
- Shielding > 100 dB
- Fire Rated Low Smoke Polyolefin Jacket

Applications

- Distributed Antenna Systems (DAS)
- UL Listed, Type CMR Riser Applications
- Low Smoke Requirements
- Small Cell
- Outdoor Applications
- Antenna Jumpers

Description

SPF-250 low loss, low PIM Fire Retardant coax cable by Times Microwave is part of our full line of RF components available for same-day shipping. The SPF-250 coaxial cable features a low loss dielectric with an 83% velocity of propagation (VoP), solid copper center conductor and a helically corrugated, copper outer conductor. This cable is UL listed, type CMR (riser) rated coax. These features combine to make the Times Microwave SPF-250 a super flexible, low PIM coax cable that is well suited for use as an antenna jumper cable, Distributed Antenna Systems (DAS), small cell, and other applications where Fire Rated material is required. The durable UV and sunlight resistant black flame retardant, non-halogen, polyethylene jacket makes this cable appropriate for a wide range of indoor or outdoor applications.

Our datasheet specifications and drawing with dimensions for Times Microwave SPF-250 coax cable are shown below in this PDF. Whether the need is to provide a low PIM jumper connection, low PIM feeder cable or simply create a custom cable assembly configuration, Pasternack has the right SPF-250 low PIM cable assembly for the job. See our web site to find the right connector cable combination for your application.

Electrical Specifications

Description	Minimum	Typical	Maximum	Units
Frequency Range	DC		5.8	GHz
Impedance		50		Ohms
Velocity of Propagation		83		%
Passive Intermodulation			-160	dBc
Nominal Capacitance		24 [78.74]		pF/ft [pF/m]
Nominal Inductance		0.054 [0.18]		uH/ft [uH/m]

Click the following link (or enter part number in “SEARCH” on website) to obtain additional part information including price, inventory and certifications: Low Loss SPF-250 Rated Corrugated Coax Cable with Black FRPE Jacket Superflexible Fire Rated SPF-250

Pasternack Enterprises, Inc. • P.O. Box 16759, Irvine, CA 92623
Phone: (866) 727-8376 or (949) 261-1920 • **Fax:** (949) 261-7451
Sales@Pasternack.com • Techsupport@Pasternack.com

© 2019 Pasternack Enterprises All Rights Reserved

Low Loss SPF-250 Rated Corrugated Coax Cable with Black FRPE Jacket Superflexible Fire Rated

Performance by Frequency Band

Description	F1	F2	F3	F4	F5	Units
Frequency	0.45	1.5	2	2.5	5.8	GHz
Attenuation, Typ	4.1	7.8	9.13	10.33	16.65	dB/100ft
	13.45	25.59	29.95	33.89	54.63	dB/100m
Input Power (CW), Max	1,110	580	500	440	280	Watts

Mechanical Specifications

Diameter	0.303 in [7.7 mm]
Weight	0.057 lbs/ft [0.08 Kg/m]
Min. Bend Radius (Installation)	1.25 in [31.75 mm]
Bending Moment	0.5 lbs-ft [0.68 N-m]

Construction Specifications

Description	Material and Plating	Diameter
Inner Conductor	Copper Clad Aluminum1	0.075 in 1.91 mm
Conductor Type	Solid	
Dielectric	Foam PE	0.177 in 4.5 mm
Outer Conductor	Copper Corrugated	0.252 in 6.4 mm
Jacket	FRPE, Black	0.303 in [7.7 mm]

Environmental Specifications

Temperature

Operating Range	-40 to +85 deg C

Click the following link (or enter part number in “SEARCH” on website) to obtain additional part information including price, inventory and certifications: Low Loss SPF-250 Rated Corrugated Coax Cable with Black FRPE Jacket Superflexible Fire Rated SPF-250

Pasternack Enterprises, Inc. • P.O. Box 16759, Irvine, CA 92623
Phone: (866) 727-8376 or (949) 261-1920 • **Fax:** (949) 261-7451
Sales@Pasternack.com • Techsupport@Pasternack.com

© 2019 Pasternack Enterprises All Rights Reserved

Low Loss SPF-250 Rated Corrugated Coax Cable with Black FRPE Jacket Superflexible Fire Rated

Compliance Certifications (see product page for current document)

Plotted and Other Data

Notes:

Low Loss SPF-250 Rated Corrugated Coax Cable with Black FRPE Jacket Superflexible Fire Rated from Pasternack Enterprises has same day shipment for domestic and International orders. Our RF, microwave and millimeter wave products maintain a 99.4% availability and are part of the broadest selection in the industry.

Click the following link (or enter part number in “SEARCH” on website) to obtain additional part information including price, inventory and certifications: Low Loss SPF-250 Rated Corrugated Coax Cable with Black FRPE Jacket Superflexible Fire Rated SPF-250

URL: https://www.pasternack.com/low-loss-corrugated-spf250-frpe-jacket-spf-250-p.aspx

The information contained in this document is accurate to the best of our knowledge and representative of the part described herein. It may be necessary to make modifications to the part and/or the documentation of the part, in order to implement improvements. Pasternack reserves the right to make such changes as required. Unless otherwise stated, all specifications are nominal. Pasternack does not make any representation or warranty regarding the suitability of the part described herein for any particular purpose, and Pasternack does not assume any liability arising out of the use of any part or documentation.

Pasternack Enterprises, Inc. • P.O. Box 16759, Irvine, CA 92623
Phone: (866) 727-8376 or (949) 261-1920 • **Fax:** (949) 261-7451
Sales@Pasternack.com • Techsupport@Pasternack.com

© 2019 Pasternack Enterprises All Rights Reserved

SPF-250 CAD Drawing

Low Loss SPF-250 Rated Corrugated Coax Cable with
Black FRPE Jacket Superflexible Fire Rated

REVISIONS

REV.	DESCRIPTION	DATE	APPROVED
A	INITIAL RELEASE	03/04/19	S.ELLIS

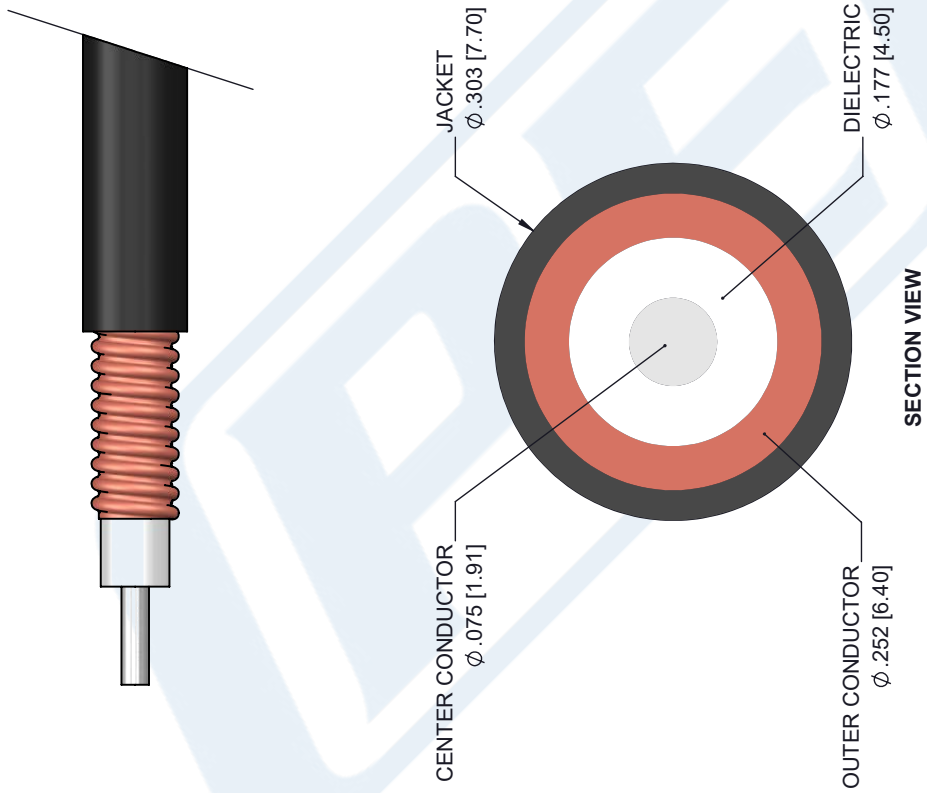

UNLESS OTHERWISE SPECIFIED
LEADING DIMENSIONS ARE INCHES
DIMENSIONS IN [ ] ARE MILLIMETERS

TOLERANCES:

X=± .2 [5.08] | FRACTIONS ± 1/32
.XX=± .01 [.25] | ANGLES ± 1°
.XXX=± .005 [.13]

ALL DIMENSIONS SHOWN ARE FOR REFERENCE ONLY.

THIRD-ANGLE PROJECTION

PASTERNACK
an INFINITE brand
Pasternack Enterprises, Inc.
P.O.Box 16759, Irvine, CA 92623.
Phone: 1.949.261.1920 | 1.866.727.8376
Fax: 1.949.261.7451
www.pasternack.com | e-mail: sales@pasternack.com

THE INFORMATION AND DESIGN IN THIS DOCUMENT IS THE PROPERTY OF PASTERNACK CORPORATION. ALL RIGHTS RESERVED.

SIZE	CAGE	DRAWN BY	PART NUMBER	REV
A	53919	K.DANG	SPF-250	A

SHEET 1 OF 1

SCALE N/A

THESE COMMODITIES, TECHNOLOGY OR SOFTWARE WERE EXPORTED FROM THE UNITED STATES IN ACCORDANCE WITH THE EXPORT ADMINISTRATION REGULATIONS. DIVERSION CONTRARY TO U.S. LAW PROHIBITED.

T-Rev.B