PASTERNACK
an INFINITE brand

# Banana Plug Connector Crimp/Solder Attachment for RG55, RG142, RG223, RG400

RF Connectors
Technical Data Sheet

PE4089

## Configuration

- Banana Plug Connector
- Straight Body Geometry
- Connector Interface Types: RG55, RG142, RG223, RG400

## Applications

- General Purpose Test
- Custom Cable Assemblies

### Description

Pasternack's PE4089 Banana plug connector with crimp/solder attachment for RG55, RG142, RG223 and RG400 is part of our full line of RF components available for same-day shipping.

Our Banana plug connector PE4089 datasheet specifications and drawing with dimensions are shown below in this PDF. Pasternack's broad catalog of RF, microwave and millimeter wave connectors allows designers to configure and customize their signal connections however they like. Whether the need is to provide an I/O for a board design, or simply create a custom cable assembly configuration, Pasternack has the right connector for the job. Pasternack can also expertly build your custom cable assemblies for you and ship same-day.

### Mechanical Specifications

Weight 0.048 lbs [21.77 g]

#### Material Specifications

| Description | Material | Plating |
|---|---|---|
| Body | Brass | Nickel |

### Environmental Specifications

### Compliance Certifications (see product page for current document)

### Plotted and Other Data

Notes:

Click the following link (or enter part number in "SEARCH" on website) to obtain additional part information including price, inventory and certifications: Banana Plug Connector Crimp/Solder Attachment for RG55, RG142, RG223, RG400 PE4089

Pasternack Enterprises, Inc. • P.O. Box 16759, Irvine, CA 92623
**Phone:** (866) 727-8376 or (949) 261-1920 • **Fax:** (949) 261-7451
Sales@Pasternack.com • Techsupport@Pasternack.com

© 2019 Pasternack Enterprises All Rights Reserved

# Banana Plug Connector Crimp/Solder Attachment for RG55, RG142, RG223, RG400

## RF Connectors
## Technical Data Sheet

PE4089

Banana Plug Connector Crimp/Solder Attachment for RG55, RG142, RG223, RG400 from Pasternack Enterprises has same day shipment for domestic and International orders. Our RF, microwave and millimeter wave products maintain a 99.4% availability and are part of the broadest selection in the industry.

Click the following link (or enter part number in "SEARCH" on website) to obtain additional part information including price, inventory and certifications: Banana Plug Connector Crimp/Solder Attachment for RG55, RG142, RG223, RG400 PE4089

URL: https://www.pasternack.com/banana-plug-rg55-rg142-rg223-rg400-connector-pe4089-p.aspx

The information contained in this document is accurate to the best of our knowledge and representative of the part described herein. It may be necessary to make modifications to the part and/or the documentation of the part, in order to implement improvements. Pasternack reserves the right to make such changes as required. Unless otherwise stated, all specifications are nominal. Pasternack does not make any representation or warranty regarding the suitability of the part described herein for any particular purpose, and Pasternack does not assume any liability arising out of the use of any part or documentation.

Pasternack Enterprises, Inc. • P.O. Box 16759, Irvine, CA 92623
**Phone:** (866) 727-8376 or (949) 261-1920 • **Fax:** (949) 261-7451
Sales@Pasternack.com • Techsupport@Pasternack.com

© 2019 Pasternack Enterprises All Rights Reserved

# PE4089 CAD Drawing

Banana Plug Connector Crimp/Solder Attachment for RG55, RG142, RG223, RG400

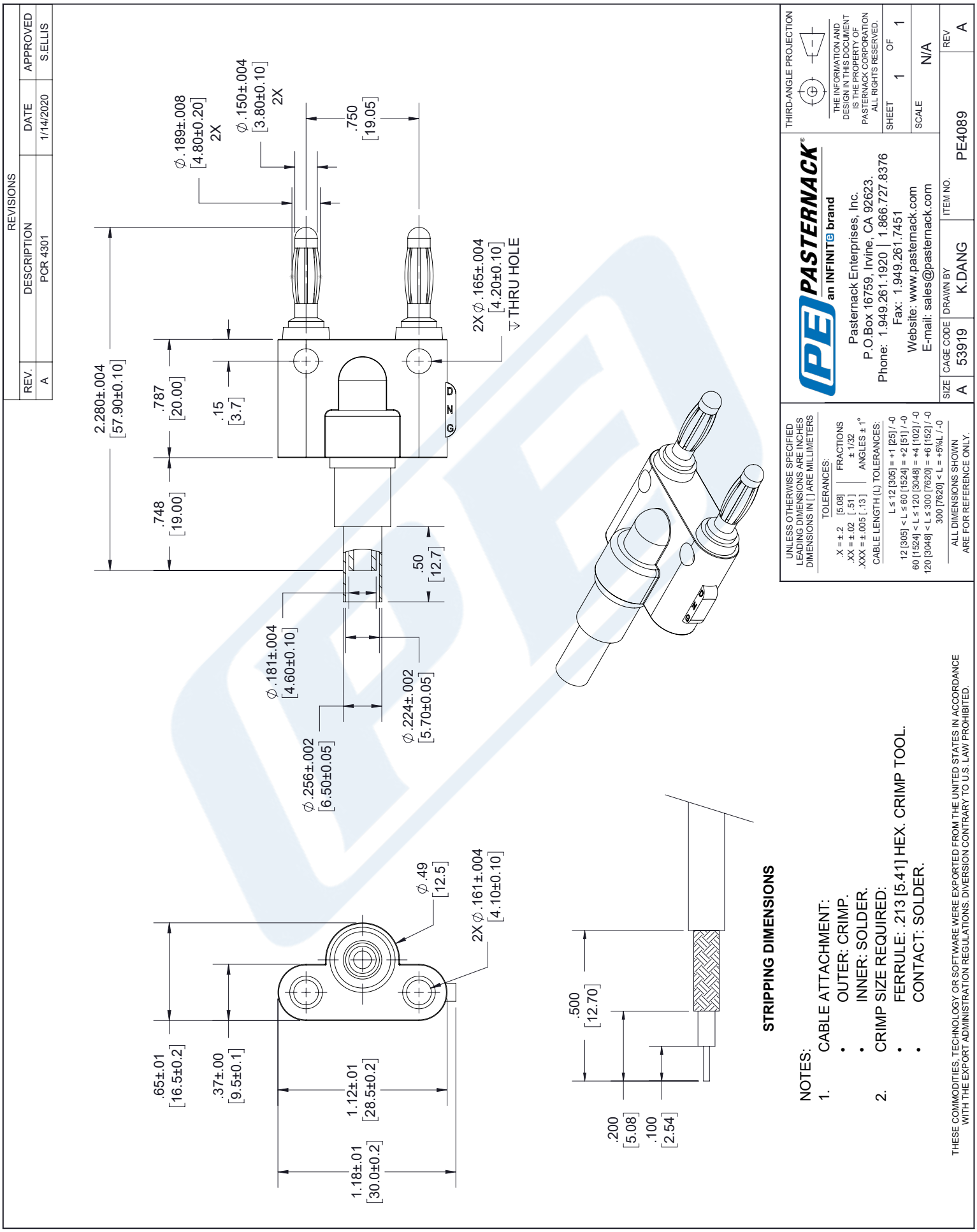


© 2019 Pasternack Enterprises All Rights Reserved

PASTERNACK®
THE ENGINEER'S RF SOURCE

# MCX Plug Connector Crimp/Solder Attachment for RG55, RG141, RG142, RG223, RG400



## Configuration

- MCX Plug Connector
- MIL-C-39012
- 50 Ohms
- Straight Body Geometry
- RG55, RG141, RG142, RG223, RG400 Interface Type
- Crimp/Solder Attachment

## Features

- Gold Plated Contact
- Contact plating according to MIL-G-45204

## Applications

- General Purpose Test
- Custom Cable Assemblies

### Description

Pasternack's PE4881 MCX plug connector with crimp/solder attachment for RG55, RG141, RG142, RG223 and RG400 is part of our full line of RF components available for same-day shipping.

Our MCX plug connector PE4881 datasheet specifications and drawing with dimensions are shown below in this PDF. Pasternack's broad catalog of RF, microwave and millimeter wave connectors allows designers to configure and customize their signal connections however they like. Whether the need is to provide an I/O for a board design, or simply create a custom cable assembly configuration, Pasternack has the right connector for the job. Pasternack can also expertly build your custom cable assemblies for you and ship same-day.

### Mechanical Specifications

**Size**

| | |
|---|---|
| Length | 0.92 in [23.37 mm] |
| Width/Dia. | 0.25 in [6.35 mm] |
| Weight | 0.006 lbs [2.72 g] |

**Material Specifications**

| Description | Material | Plating |
|---|---|---|
| Contact | | Gold<br>MIL-G-45204 |
| Insulation | PTFE | |
| Body | Brass | Nickel<br>QQ-N-290 |

Click the following link (or enter part number in "SEARCH" on website) to obtain additional part information including price, inventory and certifications: MCX Plug Connector Crimp/Solder Attachment for RG55, RG141, RG142, RG223, RG400 PE4881

Pasternack Enterprises, Inc. • P.O. Box 16759, Irvine, CA 92623
**Phone:** (866) 727-8376 or (949) 261-1920 • **Fax:** (949) 261-7451
Sales@Pasternack.com • Techsupport@Pasternack.com

© 2016 Pasternack Enterprises All Rights Reserved

# MCX Plug Connector Crimp/Solder Attachment for RG55, RG141, RG142, RG223, RG400



## Environmental Specifications

**Temperature**

| | |
|---|---|
| Operating Range | -65 to +165 deg C |

## Compliance Certifications (see product page for current document)

## Plotted and Other Data

Notes:

MCX Plug Connector Crimp/Solder Attachment for RG55, RG141, RG142, RG223, RG400 from Pasternack Enterprises has same day shipment for domestic and International orders. Our RF, microwave and millimeter wave products maintain a 99% availability and are part of the broadest selection in the industry.

Click the following link (or enter part number in "SEARCH" on website) to obtain additional part information including price, inventory and certifications: MCX Plug Connector Crimp/Solder Attachment for RG55, RG141, RG142, RG223, RG400 PE4881

URL: https://www.pasternack.com/mcx-plug-standard-rg55-rg142-rg223-rg400-connector-pe4881-p.aspx

The information contained in this document is accurate to the best of our knowledge and representative of the part described herein. It may be necessary to make modifications to the part and/or the documentation of the part, in order to implement improvements. Pasternack reserves the right to make such changes as required. Unless otherwise stated, all specifications are nominal. Pasternack does not make any representation or warranty regarding the suitability of the part described herein for any particular purpose, and Pasternack does not assume any liability arising out of the use of any part or documentation.

Pasternack Enterprises, Inc. • P.O. Box 16759, Irvine, CA 92623
**Phone:** (866) 727-8376 or (949) 261-1920 • **Fax:** (949) 261-7451
Sales@Pasternack.com • Techsupport@Pasternack.com

© 2016 Pasternack Enterprises All Rights Reserved

# PE4881 CAD Drawing

MCX Plug Connector Crimp/Solder Attachment for RG55, RG141, RG142, RG223, RG400

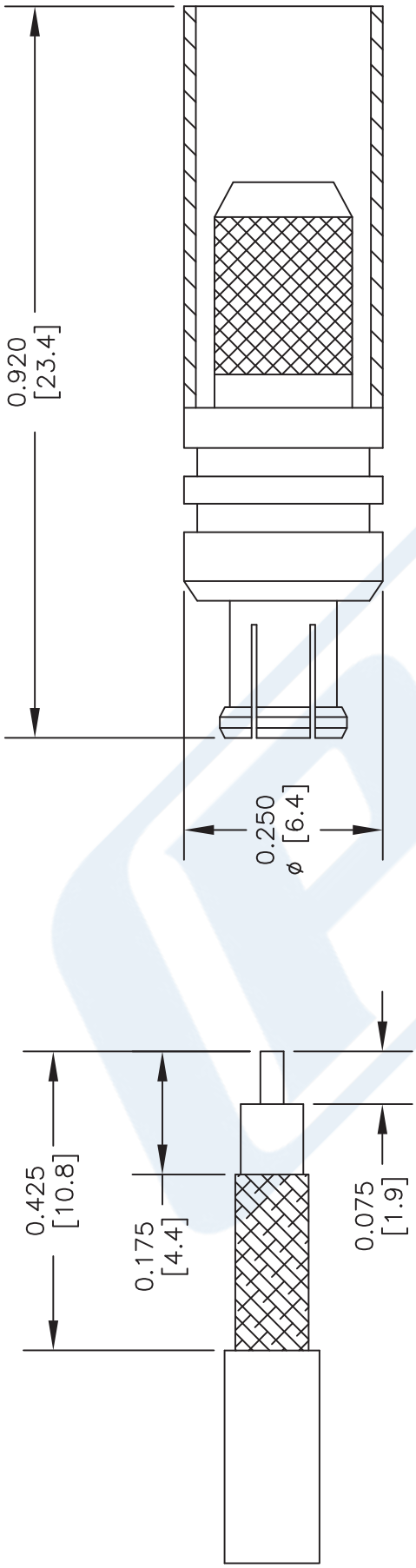


STRIPPING DIMENSIONS

CRIMP SIZE REQUIRED

FERRULE: .213" HEX CRIMP TOOL

NOTES:
1. UNLESS OTHERWISE SPECIFIED ALL DIMENSIONS ARE NOMINAL.
2. ALL SPECIFICATIONS ARE SUBJECT TO CHANGE WITHOUT NOTICE AT ANY TIME.
3. DIMENSIONS ARE IN INCHES [mm].
4. FITS MIL-C-17 AND EQUIVALENT CABLES.

DWG TITLE
PE4881

FSCM NO. 53919

CAD FILE 061202 | SCALE N/A | SIZE A | XXXX

PASTERNACK®
Pasternack Enterprises, Inc.
P.O. Box 16759 | Irvine | CA | 92623
**Phone:** (949) 261-1920 | **Fax:** (949) 261-7451
**Website:** www.pasternack.com | **E-Mail:** sales@pasternack.com

© 2016 Pasternack Enterprises All Rights Reserved

PASTERNACK
an INFINITE brand

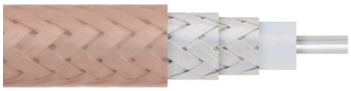

# Flexible RG142 Coax Cable Double Shielded with Tan FEP Jacket

## RF Cables
## Technical Data Sheet

**RG142B/U**

## Configuration

- Flexible Cable
- 2 Shield(s)

### Electrical Specifications

| Description | Minimum | Typical | Maximum | Units |
|---|---|---|---|---|
| Frequency Range | DC | | 8 | GHz |
| Impedance | | 50 | | Ohms |
| Velocity of Propagation | | 70 | | % |
| Shielding Effectiveness | 70 | | | dB |
| Operating Voltage (AC) | | | 1,900 | Vrms |
| Dielectric Withstanding Voltage (DC) | | | 5,000 | Vdc |
| Inner Conductor DC Resistance | | | 65 | Ohms/1000ft |
| Outer Conductor DC Resistance | | | 9 | Ohms/1000ft |
| Nominal Capacitance | | 96.45 [316.44] | | pF/ft [pF/m] |
| Insulation Resistance | 5,000 | | | MOhms/1000ft |
| Power@ 1GHz | | | 395 | Watts |

### Performance by Frequency Band

| Description | F1 | F2 | F3 | F4 | F5 | Units |
|---|---|---|---|---|---|---|
| Frequency | 0.1 | 0.4 | 1 | 3 | 5 | GHz |
| Attenuation, Typ | 3.9 | 7.9 | 12.9 | 23.9 | 32.1 | dB/100ft |
| | 12.8 | 25.92 | 42.32 | 78.41 | 105.31 | dB/100m |

| Description | F6 | F7 | F8 | F9 | F10 | Units |
|---|---|---|---|---|---|---|
| Frequency | 6 | 8 | | | | GHz |
| Attenuation, Typ | 36.86 | 44.17 | | | | dB/100ft |
| | 120.93 | 144.91 | | | | dB/100m |

### Mechanical Specifications

| | |
|---|---|
| Diameter | 0.195 in [4.95 mm} |
| Weight | 0.042 lbs/ft [0.06 kg/m] |

Click the following link (or enter part number in “SEARCH” on website) to obtain additional part information including price, inventory and certifications: Flexible RG142 Coax Cable Double Shielded with Tan FEP Jacket RG142B/U

Pasternack Enterprises, Inc. • P.O. Box 16759, Irvine, CA 92623
**Phone:** (866) 727-8376 or (949) 261-1920 • **Fax:** (949) 261-7451
Sales@Pasternack.com • Techsupport@Pasternack.com

© 2020 Pasternack Enterprises All Rights Reserved

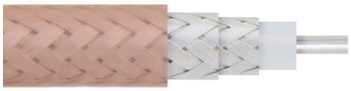

# Flexible RG142 Coax Cable Double Shielded with Tan FEP Jacket



| | |
|---|---|
| Min. Bend Radius (Installation) | 0.98 in [24.89 mm] |
| Min. Bend Radius (Repeated) | 1.97 in [50.04 mm] |

**Construction Specifications**

| Description | Material and Plating | Diameter |
|---|---|---|
| Inner Conductor | Copper Clad Steel, Silver, 1 Strand | 0.037 in [0.94 mm] |
| Conductor Type | Solid | |
| Dielectric | PTFE | 0.116 in [2.95 mm] |
| First Shield | Silver Plated Copper Braid | [ ] |
| Second Shield | Silver Plated Copper Braid | 0.156 in [3.96 mm] |
| Jacket | FEP, Tan | 0.195 in [4.95 mm] |

## Environmental Specifications

**Temperature**

| | |
|---|---|
| Operating Range | -55 to +200 deg C |
| Installation Range | -20 to +50 deg C |
| Storage Range | 0 to +40 deg C |
| Humidity | 0 - 80% Relative Humidity |

## Compliance Certifications (see product page for current document)

## Plotted and Other Data

Notes:

Flexible RG142 Coax Cable Double Shielded with Tan FEP Jacket from Pasternack Enterprises has same day shipment for domestic and International orders. Our RF, microwave and millimeter wave products maintain a 99.4% availability and are part of the broadest selection in the industry.

Click the following link (or enter part number in “SEARCH” on website) to obtain additional part information including price, inventory and certifications: Flexible RG142 Coax Cable Double Shielded with Tan FEP Jacket RG142B/U

URL: https://www.pasternack.com/flexible-0.195-rg142-50-ohm-coax-cable-fep-jacket-rg142b-u-p.aspx

Pasternack Enterprises, Inc. • P.O. Box 16759, Irvine, CA 92623
**Phone:** (866) 727-8376 or (949) 261-1920 • **Fax:** (949) 261-7451
Sales@Pasternack.com • Techsupport@Pasternack.com

© 2020 Pasternack Enterprises All Rights Reserved

# RG142B/U CAD Drawing

Flexible RG142 Coax Cable Double Shielded with Tan FEP Jacket

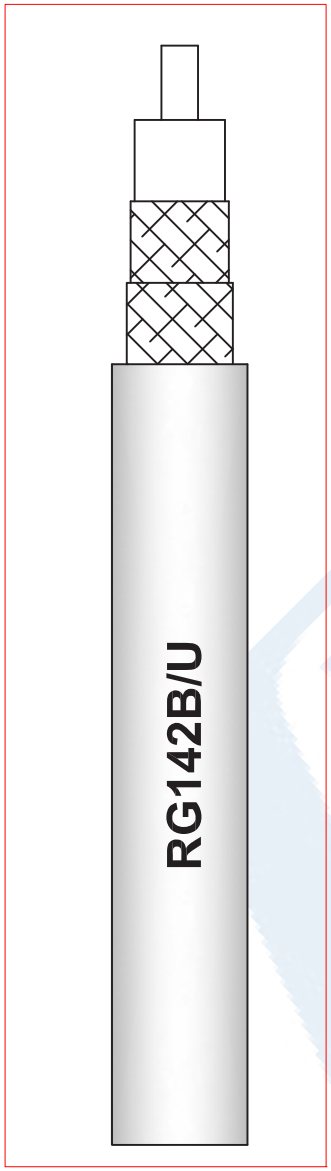


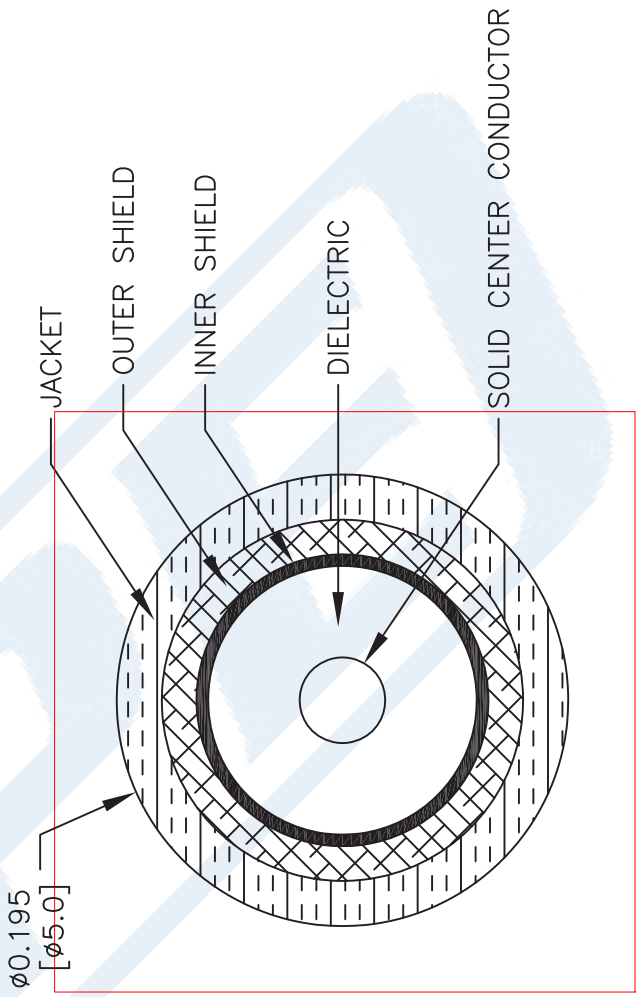


NOTES:
1. UNLESS OTHERWISE SPECIFIED ALL DIMENSIONS ARE NOMINAL.
2. ALL SPECIFICATIONS ARE SUBJECT TO CHANGE WITHOUT NOTICE AT ANY TIME.
3. DIMENSIONS ARE IN INCHES [mm].

DWG TITLE
RG142B/U

FSCM NO. 53919

CAD FILE 111716 | SCALE N/A | SIZE A | 41742

PASTERNACK®
THE ENGINEER'S RF SOURCE
Pasternack Enterprises, Inc.
P.O. Box 16759 | Irvine | CA | 92623
**Phone:** (949) 261-1920 | **Fax:** (949) 261-7451
**Website:** www.pasternack.com | **E-Mail:** sales@pasternack.com

© 2020 Pasternack Enterprises All Rights Reserved