PASTERNACK®
THE ENGINEER'S RF SOURCE

# SMB Jack Connector Crimp/Solder Attachment for RG174, RG316, RG188, LMR-100, PE-B100, PE-C100, 0.100 inch



## Configuration

- SMB Jack Connector
- 50 Ohms
- Straight Body Geometry
- RG174, RG316, RG188, LMR-100, PE-B100, PE-C100, 0.100 inch Interface Type
- Crimp/Solder Attachment

## Features

- Max. Operating Frequency 4 GHz
- Good VSWR of 1.3:1
- Gold Plated Brass Contact
- 30 µin minimum contact plating

## Applications

- General Purpose Test
- Custom Cable Assemblies

### Description

Pasternack's PE4096 SMB jack connector with crimp/solder attachment for RG174, RG316, RG188, LMR-100, PE-B100, PE-C100 and 0.100 inch is part of our full line of RF components available for same-day shipping. Our SMB jack connector operates up to a maximum frequency of 4 GHz and offers good VSWR of 1.3:1.

Our SMB jack connector PE4096 datasheet specifications and drawing with dimensions are shown below in this PDF. Pasternack's broad catalog of RF, microwave and millimeter wave connectors allows designers to configure and customize their signal connections however they like. Whether the need is to provide an I/O for a board design, or simply create a custom cable assembly configuration, Pasternack has the right connector for the job. Pasternack can also expertly build your custom cable assemblies for you and ship same-day.

### Electrical Specifications

| Description | Minimum | Typical | Maximum | Units |
|---|---|---|---|---|
| Frequency Range | DC | | 4 | GHz |
| VSWR | | | 1.3:1 | |
| Operating Voltage (AC) | | | 335 | Vrms |

### Mechanical Specifications

**Size**

| | |
|---|---|
| Length | 0.84 in [21.34 mm] |
| Width/Dia. | 0.25 in [6.35 mm] |
| Weight | 0.01 lbs [4.54 g] |

Click the following link (or enter part number in "SEARCH" on website) to obtain additional part information including price, inventory and certifications: SMB Jack Connector Crimp/Solder Attachment for RG174, RG316, RG188, LMR-100, PE-B100, PE-C100, 0.100 inch PE4096

Pasternack Enterprises, Inc. • P.O. Box 16759, Irvine, CA 92623
**Phone:** (866) 727-8376 or (949) 261-1920 • **Fax:** (949) 261-7451
Sales@Pasternack.com • Techsupport@Pasternack.com

© 2016 Pasternack Enterprises All Rights Reserved

# SMB Jack Connector Crimp/Solder Attachment for RG174, RG316, RG188, LMR-100, PE-B100, PE-C100, 0.100 inch



**Material Specifications**

| Description | Material | Plating |
|---|---|---|
| Contact | Brass | Gold<br>30 µin minimum |
| Insulation | PTFE | |
| Body | Brass | Nickel<br>100 µin minimum |

## Environmental Specifications

**Temperature**

Operating Range -65 to +165 deg C

## Compliance Certifications (see product page for current document)

## Plotted and Other Data

Notes:

SMB Jack Connector Crimp/Solder Attachment for RG174, RG316, RG188, LMR-100, PE-B100, PE-C100, 0.100 inch from Pasternack Enterprises has same day shipment for domestic and International orders. Our RF, microwave and millimeter wave products maintain a 99% availability and are part of the broadest selection in the industry.

Click the following link (or enter part number in "SEARCH" on website) to obtain additional part information including price, inventory and certifications: SMB Jack Connector Crimp/Solder Attachment for RG174, RG316, RG188, LMR-100, PE-B100, PE-C100, 0.100 inch PE4096

URL: https://www.pasternack.com/smb-jack-standard-rg174-rg316-rg188-connector-pe4096-p.aspx

The information contained in this document is accurate to the best of our knowledge and representative of the part described herein. It may be necessary to make modifications to the part and/or the documentation of the part, in order to implement improvements. Pasternack reserves the right to make such changes as required. Unless otherwise stated, all specifications are nominal. Pasternack does not make any representation or warranty regarding the suitability of the part described herein for any particular purpose, and Pasternack does not assume any liability arising out of the use of any part or documentation.

Pasternack Enterprises, Inc. • P.O. Box 16759, Irvine, CA 92623
**Phone:** (866) 727-8376 or (949) 261-1920 • **Fax:** (949) 261-7451
Sales@Pasternack.com • Techsupport@Pasternack.com

© 2016 Pasternack Enterprises All Rights Reserved

# PE4096 CAD Drawing

SMB Jack Connector Crimp/Solder Attachment for RG174, RG316, RG188, LMR-100, PE-B100, PE-C100, 0.100 inch

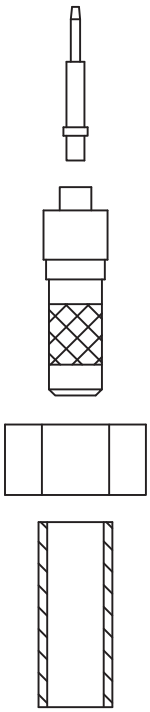


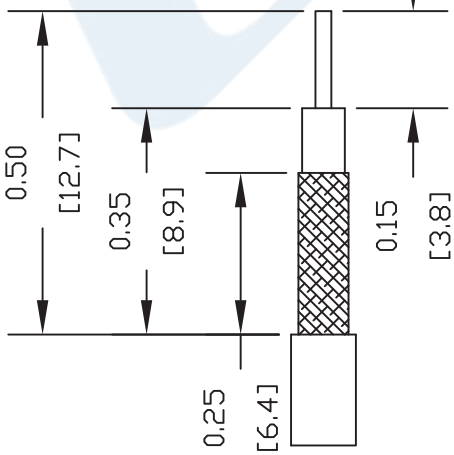


STRIPPING DIMENSIONS

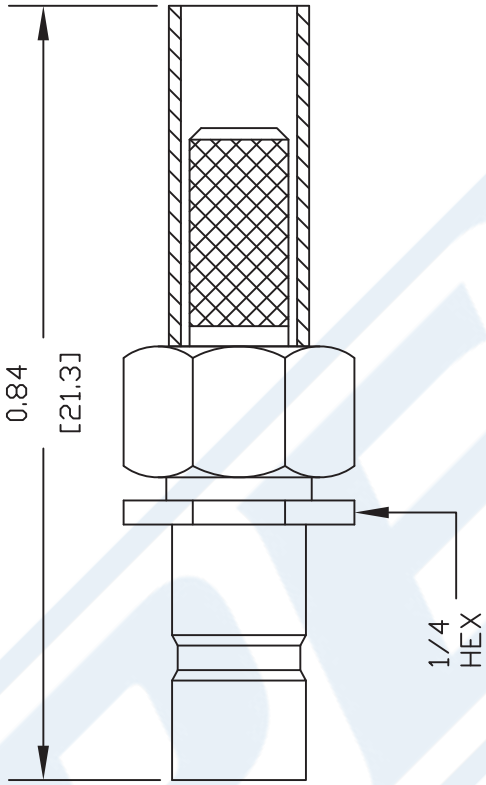


ASSEMBLY PROCEDURES

1. SLIDE FERRULLE (1) & CRIMP NUT (2) OVER CABLE. STRIP CABLE AS SHOWN. TIN CENTER CONDUCTOR.
2. FLAIR BRAID & INSERT EXTENSION (3) SLIDING UNDER BRAID. DIELECTRIC MUST SEAT AGAINST INSULATOR IN EXTENSION WITH CENTER CONDUCTOR PROTRUDING THROUGH INSULATOR.
3. SOLDER CONTACT TO CENTER CONDUCTOR. INSTALL CABLE ASSEMBLY INTO BODY & TIGHTEN.

CRIMP SIZE REQUIRED

FERRULE: .128" HEX CRIMP TOOL

NOTES:
1. UNLESS OTHERWISE SPECIFIED ALL DIMENSIONS ARE NOMINAL.
2. ALL SPECIFICATIONS ARE SUBJECT TO CHANGE WITHOUT NOTICE AT ANY TIME.
3. DIMENSIONS ARE IN INCHES [mm].
4. FITS MIL-C-17 AND EQUIVALENT CABLES.

DWG TITLE **PE4096**

| REV. - | FSCM NO. 53919 | CAD FILE 101603 | SCALE N/A | SIZE A | 127 |
|---|---|---|---|---|---|


PASTERNACK®
Pasternack Enterprises, Inc.
P.O. Box 16759 | Irvine | CA | 92623
**Phone:** (949) 261-1920 | **Fax:** (949) 261-7451
**Website:** www.pasternack.com | **E-Mail:** sales@pasternack.com


© 2016 Pasternack Enterprises All Rights Reserved

# SHV Plug Connector Clamp/Solder Attachment for RG174, RG316, RG188, LMR-100, PE-B100, PE-C100, .100 inch

## PE4498

### Configuration

- SHV Plug Connector
- MIL-STD-348A
- 50 Ohms
- Straight Body Geometry
- Connector Interface Types: RG174, RG316, RG188, LMR-100, PE-B100, PE-C100, .100 inch

### Features

- Max. Operating Frequency 300 MHz
- Good VSWR of 1.5:1
- Gold Plated Brass Contact
- 30 µin minimum contact plating

### Applications

- General Purpose Test
- Custom Cable Assemblies

### Description

Pasternack's PE4498 , SHV, Standard, Connector is part of our full line of RF components available for same-day shipping. Our SHV plug connector operates up to a maximum frequency of 300 MHz and offers good VSWR of 1.5:1.

Our SHV plug connector PE4498 datasheet specifications and drawing with dimensions are shown below in this PDF. Pasternack's broad catalog of RF, microwave and millimeter wave connectors allows designers to configure and customize their signal connections however they like. Whether the need is to provide an I/O for a board design, or simply create a custom cable assembly configuration, Pasternack has the right connector for the job. Pasternack can also expertly build your custom cable assemblies for you and ship same-day.

### Electrical Specifications

| Description | Minimum | Typical | Maximum | Units |
|---|---|---|---|---|
| Frequency Range | DC | | 300 | MHz |
| VSWR | | | 1.5:1 | |
| Operating Voltage (AC) | | | 1,100 | Vrms |
| Impedance | | 50 | | Ohms |

### Mechanical Specifications

| Size | |
|---|---|
| Length | 1.83 in [46.48 mm] |
| Width | 0.571 in [14.50 mm] |
| Weight | 0.06 lbs [27.22 g] |


© 2023 Infinite Electronics, Inc. Pasternack is a registered trademark of Infinite Electronics, Inc.
+1 (866) 558-2786 | sales@pasternack.com | pasternack.com

# SHV Plug Connector Clamp/Solder Attachment for RG174, RG316, RG188, LMR-100, PE-B100, PE-C100, .100 inch

## PE4498

### Material Specifications

| Description | Material | Plating |
|---|---|---|
| Contact | Brass | Gold<br>30 µin minimum |
| Insulation | PTFE | |
| Body | Brass | Nickel<br>100 µin minimum |
| Coupling Nut | Brass | Nickel<br>100 µin minimum |

Mechanical Specification Notes:
When attaching the connector to the cable use a clamp torque value of 16 in-lbs [1.81 Nm]

### Environmental Specifications

**Temperature**

| | |
|---|---|
| Operating Range | -65 to +165 deg C |

### Compliance Certifications (see product page for current document)

### Plotted and Other Data

Notes:


© 2023 Infinite Electronics, Inc. Pasternack is a registered trademark of Infinite Electronics, Inc.

# SHV Plug Connector Clamp/Solder Attachment for RG174, RG316, RG188, LMR-100, PE-B100, PE-C100, .100 inch

## PE4498

### Assembly Instruction

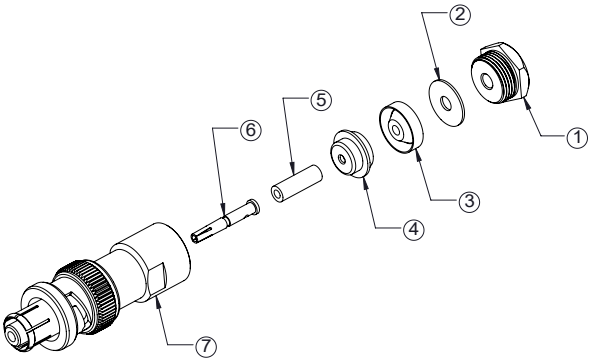


ASSEMBLY PROCEDURES

1. SLIDE CLAMP NUT ①, THINNER WASHER ② & GASKET ③ OVER CABLE. STRIP CABLE AS SHOWN. DO NOT NICK BRAID WHILE CUTTING JACKET. TAPER END OF BRAID TO PERMIT ASSEMBLY OF CLAMP.

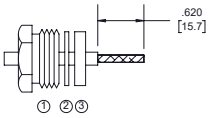


2. SLIDE BRAID CLAMP ④ OVER BRAID & SEATAGAINST CABLE. FORM BRAID OVER CLAMP NUT. TRIM BRAID BACK TO SHOULDER. CUT DIELECTRIC & CENTER CONDUCTOR TO DIMENSION SHOWN. DO NOT NICK CENTER CONDUCTOR.

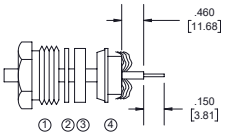


3. SLIDE INSULATOR ⑤ AGAINST THE BRAID CLAMP. SOLDER CONTACT ⑥ TO CENTER CONDUCTOR. REMOVE EXCESS SOLDER. DO NOT OVER HEAT DIELECTRIC. INSERT CABLE ASSEMBLY INTO BODY ⑦ & TIGHTEN WITH RECOMMENDED TORQUE: 16 in-lbs.

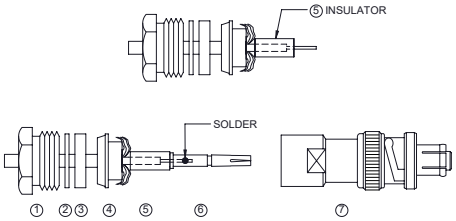



© 2023 Infinite Electronics, Inc. Pasternack is a registered trademark of Infinite Electronics, Inc.

# SHV Plug Connector Clamp/Solder Attachment for RG174, RG316, RG188, LMR-100, PE-B100, PE-C100, .100 inch

## PE4498

SHV Plug Connector Clamp/Solder Attachment for RG174, RG316, RG188, LMR-100, PE-B100, PE-C100, .100 inch from Pasternack Enterprises has same day shipment for domestic and International orders. Our RF, microwave and millimeter wave products maintain a 99.4% availability and are part of the broadest selection in the industry.

Click the following link (or enter part number in "SEARCH" on website) to obtain additional part information including price, inventory and certifications: SHV Plug Connector Clamp/Solder Attachment for RG174, RG316, RG188, LMR-100, PE-B100, PE-C100, .100 inch PE4498

URL: https://www.pasternack.com/shv-plug-standard-rg174-rg316-rg188-connector-pe4498-p.aspx

The information contained within this document is accurate to the best of our knowledge and representative of the part described herein. It may be necessary to make modifications to the part and/or the documentation of the part in order to impliment improvements. Pasternack Enterprises reserves the right to make such changes as required. Unless otherwise stated, all specifications are nominal. Pasternack Enterprises does not make any representation or warranty regarding the suitability of the part described herein for any particular purpose, and Pasternack Enterprises does not assume liability arising out of the use of any part or document.


© 2023 Infinite Electronics, Inc. Pasternack is a registered trademark of Infinite Electronics, Inc.

# PE4498 CAD Drawing

SHV Plug Connector Clamp/Solder Attachment for RG174, RG316, RG188, LMR-100, PE-B100, PE-C100, .100 inch

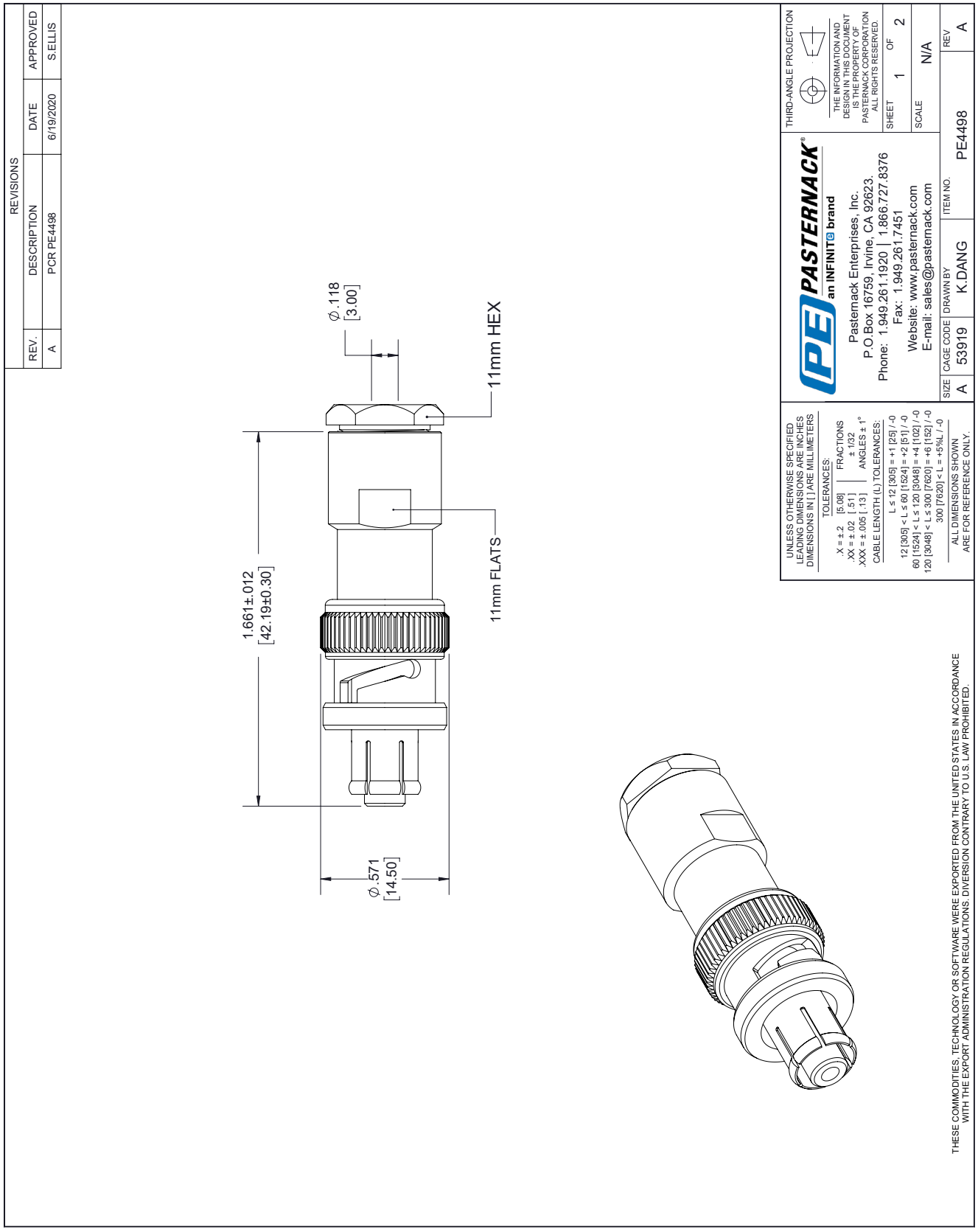




© 2023 Infinite Electronics, Inc. Pasternack is a registered trademark of Infinite Electronics, Inc.

PASTERNACK
an INFINITE brand

# Flexible RG174 Coax Cable Single Shielded with Black PVC Jacket

## RF Cables
## Technical Data Sheet

TIMES MICROWAVE SYSTEMS An Amphenol Company

**RG174A/U**

## Times Microwave Systems Coax Cable Specification

## Configuration

- Flexible Cable
- 1 Shield(s)

### Electrical Specifications

| Description | Minimum | Typical | Maximum | Units |
|---|---|---|---|---|
| Frequency Range | DC | | 1,000 | MHz |
| Impedance | | 50 | | Ohms |
| Velocity of Propagation | | 66 | | % |
| Nominal Capacitance | | 31.08 [101.97] | | pF/ft [pF/m] |
| Power@ 1GHz | | | 17 | Watts |

### Performance by Frequency Band

| Description | F1 | F2 | F3 | F4 | F5 | Units |
|---|---|---|---|---|---|---|
| Frequency | 100 | 400 | 1,000 | | | MHz |
| Attenuation, Typ | 8.4 | 19 | 32 | | | dB/100ft |
| | 27.56 | 62.34 | 104.99 | | | dB/100m |

### Mechanical Specifications

| | |
|---|---|
| Diameter | 0.11 in [2.79 mm} |
| Weight | 0.009 lbs/ft [0.01 kg/m] |

### Construction Specifications

| Description | Material and Plating | Diameter |
|---|---|---|
| Inner Conductor | Copper Clad Steel, 7 Strands | 0.019 in [0.48 mm] |
| Conductor Type | Stranded | |
| Dielectric | PE | 0.06 in [1.52 mm] |
| First Shield | Tinned Copper Braid | 0.078 in [1.98 mm] |

Click the following link (or enter part number in “SEARCH” on website) to obtain additional part information including price, inventory and certifications: Flexible RG174 Coax Cable Single Shielded with Black PVC Jacket RG174A/U

Pasternack Enterprises, Inc. • P.O. Box 16759, Irvine, CA 92623
**Phone:** (866) 727-8376 or (949) 261-1920 • **Fax:** (949) 261-7451
Sales@Pasternack.com • Techsupport@Pasternack.com

© 2020 Pasternack Enterprises All Rights Reserved

Flexible RG174 Coax Cable Single Shielded with Black PVC Jacket



| | | |
|---|---|---|
| Jacket | PVC, Black | 0.11 in [2.79 mm] |

## Environmental Specifications

**Temperature**

| | |
|---|---|
| Operating Range | -40 to +80 deg C |

## Compliance Certifications (see product page for current document)

## Plotted and Other Data

Notes:

Flexible RG174 Coax Cable Single Shielded with Black PVC Jacket from Pasternack Enterprises has same day shipment for domestic and International orders. Our RF, microwave and millimeter wave products maintain a 99.4% availability and are part of the broadest selection in the industry.

Click the following link (or enter part number in “SEARCH” on website) to obtain additional part information including price, inventory and certifications: Flexible RG174 Coax Cable Single Shielded with Black PVC Jacket RG174A/U

URL: https://www.pasternack.com/flexible-0.100-rg174-50-ohm-coax-cable-pvc-jacket-rg174a-u-p.aspx

The information contained in this document is accurate to the best of our knowledge and representative of the part described herein. It may be necessary to make modifications to the part and/or the documentation of the part, in order to implement improvements. Pasternack reserves the right to make such changes as required. Unless otherwise stated, all specifications are nominal. Pasternack does not make any representation or warranty regarding the suitability of the part described herein for any particular purpose, and Pasternack does not assume any liability arising out of the use of any part or documentation.

Pasternack Enterprises, Inc. • P.O. Box 16759, Irvine, CA 92623
**Phone:** (866) 727-8376 or (949) 261-1920 • **Fax:** (949) 261-7451
Sales@Pasternack.com • Techsupport@Pasternack.com

© 2020 Pasternack Enterprises All Rights Reserved

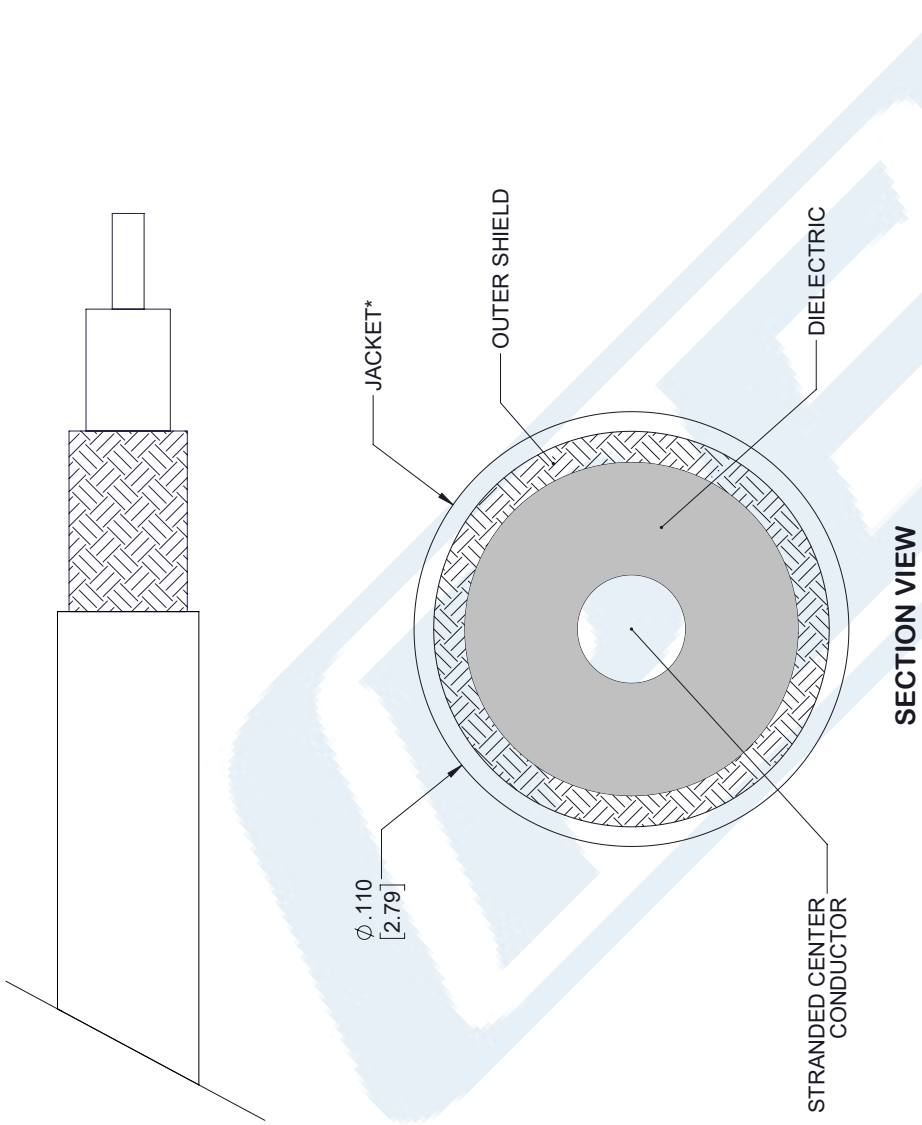


NOTE:
*STANDARD TOLERANCES APPLY ONLY TO DIMENSIONS IN INCHES

| STANDARD TOLERANCES | |
|---|---|
| .X | ±0.2 |
| .XX | ±0.01 |
| .XXX | ±0.005 |

NOTES:
1. UNLESS OTHERWISE SPECIFIED ALL DIMENSIONS ARE NOMINAL.
2. ALL SPECIFICATIONS ARE SUBJECT TO CHANGE WITHOUT NOTICE AT ANY TIME
3. DIMENSIONS ARE IN INCHES [mm].

DWG TITLE RG174A/U

CAD FILE 05/25/18 | SCALE N/A | SIZE A | 7361

CAGE CODE 53919

PASTERNACK® THE ENGINEER'S RF SOURCE
Pasternack Enterprises, Inc.
P.O. Box 16759 | Irvine | CA | 92623
**Phone:** (949) 261-1920 | **Fax:** (949) 261-7451
**Website:** www.pasternack.com | **E-Mail:** sales@pasternack.com

© 2020 Pasternack Enterprises All Rights Reserved