# MHV Male Connector Crimp/Solder Attachment for RG58, RG303, RG141, PE-C195, PE-P195, LMR-195, 0.195 inch

## Configuration

- MHV Male Connector
- MIL-STD-348A
- 50 Ohms
- Straight Body Geometry
- RG58, RG303, RG141, PE-C195, PE-P195, LMR-195, 0.195 inch Interface Type
- Crimp/Solder Attachment

## Features

- Max. Operating Frequency 300 MHz
- Good VSWR of 1.3:1
- Gold Plated Brass Contact
- 30 µin minimum contact plating

## Applications

- General Purpose Test
- Custom Cable Assemblies

### Description

Pasternack's PE4093 MHV male connector with crimp/solder attachment for RG58, RG303, RG141, PE-C195, PE-P195, LMR-195 and 0.195 inch is part of our full line of RF components available for same-day shipping. Our MHV male connector operates up to a maximum frequency of 300 MHz and offers good VSWR of 1.3:1.

Our MHV male connector PE4093 datasheet specifications and drawing with dimensions are shown below in this PDF. Pasternack's broad catalog of RF, microwave and millimeter wave connectors allows designers to configure and customize their signal connections however they like. Whether the need is to provide an I/O for a board design, or simply create a custom cable assembly configuration, Pasternack has the right connector for the job. Pasternack can also expertly build your custom cable assemblies for you and ship same-day.

### Electrical Specifications

| Description | Minimum | Typical | Maximum | Units |
|---|---|---|---|---|
| Frequency Range | DC | | 300 | MHz |
| VSWR | | | 1.3:1 | |
| Operating Voltage (AC) | | | 1,400 | Vrms |

### Mechanical Specifications

**Size**

| | |
|---|---|
| Length | 1.508 in [38.3 mm] |
| Width/Dia. | 0.57 in [14.48 mm] |
| Weight | 0.038 lbs [17.24 g] |

Click the following link (or enter part number in "SEARCH" on website) to obtain additional part information including price, inventory and certifications: MHV Male Connector Crimp/Solder Attachment for RG58, RG303, RG141, PE-C195, PE-P195, LMR-195, 0.195 inch PE4093

Pasternack Enterprises, Inc. • P.O. Box 16759, Irvine, CA 92623
**Phone:** (866) 727-8376 or (949) 261-1920 • **Fax:** (949) 261-7451
Sales@Pasternack.com • Techsupport@Pasternack.com

© 2016 Pasternack Enterprises All Rights Reserved

# MHV Male Connector Crimp/Solder Attachment for RG58, RG303, RG141, PE-C195, PE-P195, LMR-195, 0.195 inch



**Material Specifications**

| Description | Material | Plating |
|---|---|---|
| Contact | Brass | Gold<br>30 µin minimum |
| Insulation | PTFE | |
| Body | Brass | Nickel<br>100 µin minimum |
| Coupling Nut | Brass | Nickel<br>100 µin minimum |
| Crimp Sleeve | Brass | Nickel |

## Environmental Specifications

**Temperature**

Operating Range -65 to +165 deg C

## Compliance Certifications (see product page for current document)

## Plotted and Other Data

Notes:

MHV Male Connector Crimp/Solder Attachment for RG58, RG303, RG141, PE-C195, PE-P195, LMR-195, 0.195 inch from Pasternack Enterprises has same day shipment for domestic and International orders. Our RF, microwave and millimeter wave products maintain a 99% availability and are part of the broadest selection in the industry.

Click the following link (or enter part number in "SEARCH" on website) to obtain additional part information including price, inventory and certifications: MHV Male Connector Crimp/Solder Attachment for RG58, RG303, RG141, PE-C195, PE-P195, LMR-195, 0.195 inch PE4093

URL: https://www.pasternack.com/mhv-male-rg58-rg303-rg141-pe-c195-pe-p195-lmr-195-connector-pe4093-p.aspx

The information contained in this document is accurate to the best of our knowledge and representative of the part described herein. It may be necessary to make modifications to the part and/or the documentation of the part, in order to implement improvements. Pasternack reserves the right to make such changes as required. Unless otherwise stated, all specifications are nominal. Pasternack does not make any representation or warranty regarding the suitability of the part described herein for any particular purpose, and Pasternack does not assume any liability arising out of the use of any part or documentation.

Pasternack Enterprises, Inc. • P.O. Box 16759, Irvine, CA 92623
**Phone:** (866) 727-8376 or (949) 261-1920 • **Fax:** (949) 261-7451
Sales@Pasternack.com • Techsupport@Pasternack.com

© 2016 Pasternack Enterprises All Rights Reserved

# PE4093 CAD Drawing

MHV Male Connector Crimp/Solder Attachment for RG58, RG303, RG141, PE-C195, PE-P195, LMR-195, 0.195 inch

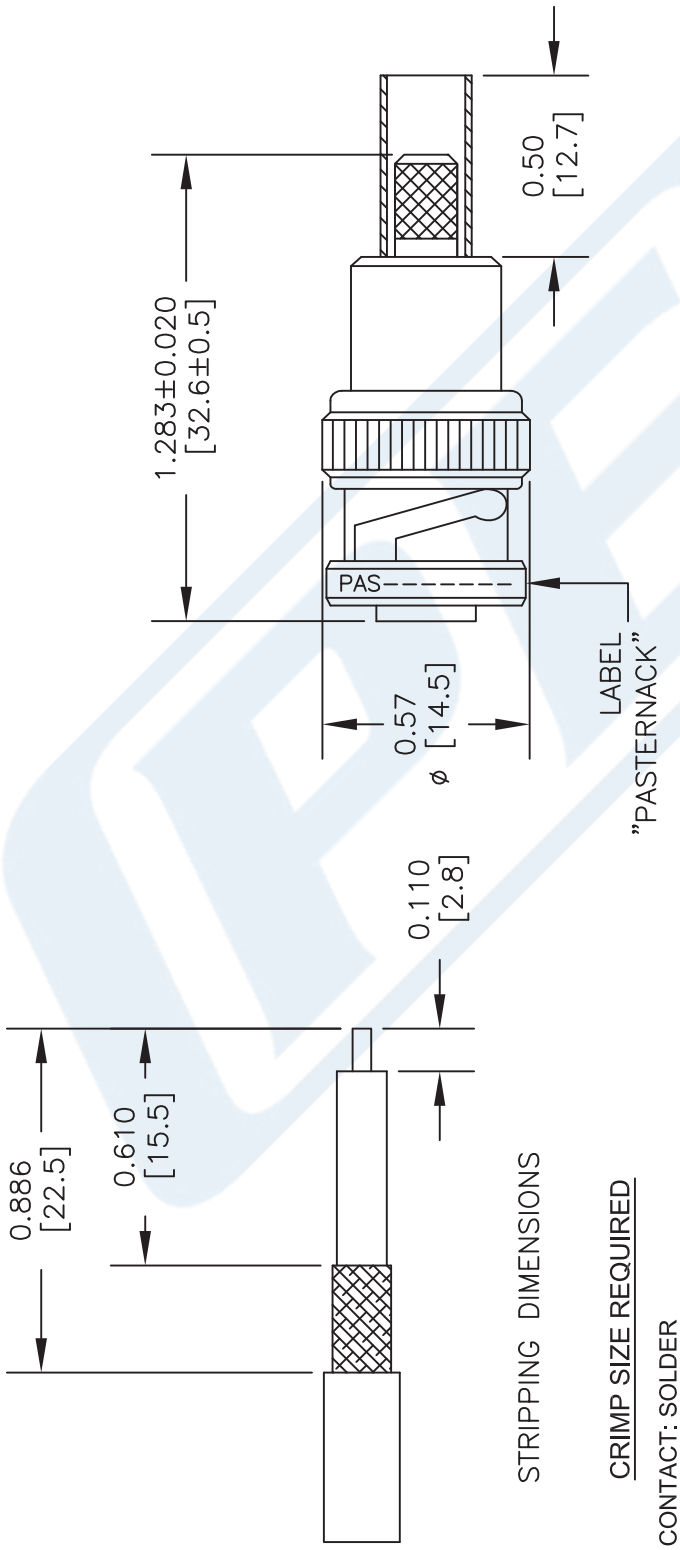


STRIPPING DIMENSIONS

CRIMP SIZE REQUIRED

CONTACT: SOLDER
FERRULE: .213" HEX CRIMP TOOL

| STANDARD TOLERANCES | |
|---|---|
| .X | ±0.2 |
| .XX | ±0.1 |
| .XXX | ±0.05 |

*STANDARD TOLERANCES APPLY ONLY TO DIMENSIONS IN INCHES

NOTES:
1. UNLESS OTHERWISE SPECIFIED ALL DIMENSIONS ARE NOMINAL.
2. ALL SPECIFICATIONS ARE SUBJECT TO CHANGE WITHOUT NOTICE AT ANY TIME.
3. DIMENSIONS ARE IN INCHES [mm].

DWG TITLE
PE4093

FSCM NO. 53919

CAD FILE 040116 | SCALE N/A | SIZE A | 3045

PASTERNACK®
THE ENGINEER'S RF SOURCE
Pasternack Enterprises, Inc.
P.O. Box 16759 | Irvine | CA | 92623
**Phone:** (949) 261-1920 | **Fax:** (949) 261-7451
**Website:** www.pasternack.com | **E-Mail:** sales@pasternack.com

© 2016 Pasternack Enterprises All Rights Reserved

PASTERNACK®
THE ENGINEER'S RF SOURCE

# N Male Connector Crimp/Solder Attachment For RG58

## RF Connectors Technical Data Sheet PE4329

### Configuration

- N Male Connector
- 50 Ohms
- Straight Body Geometry
- RG58 Interface Type
- Crimp/Solder Attachment

### Electrical Specifications

| Description | Minimum | Typical | Maximum | Units |
|---|---|---|---|---|
| Frequency Range | DC | | 12.4 | GHz |
| Dielectric Withstanding Voltage (AC) | | | 700 | |

### Mechanical Specifications

Weight 0.068 lbs [30.84 g]

#### Material Specifications

| Description | Material | Plating |
|---|---|---|
| Contact | Brass | Silver |
| Insulation | Teflon | |
| Body | Brass | Nickel |

### Environmental Specifications

**Temperature**

Operating Range -65 to 165 deg C

### Compliance Certifications (visit www.Pasternack.com for current document)

RoHS Compliant

Click the following link (or enter part number in "SEARCH" on website) to obtain additional part information including price, inventory and certifications: N Male Connector Crimp/Solder Attachment For RG58 PE4329

Pasternack Enterprises, Inc. • P.O. Box 16759, Irvine, CA 92623
**Phone:** (866) 727-8376 or (949) 261-1920 • **Fax:** (949) 261-7451
Sales@Pasternack.com • Techsupport@Pasternack.com

© 2016 Pasternack Enterprises All Rights Reserved

N Male Connector Crimp/Solder Attachment For RG58



**Plotted and Other Data**

Notes:

N Male Connector Crimp/Solder Attachment For RG58 from Pasternack Enterprises has same day shipment for domestic and International orders. Our RF, microwave and millimeter wave products maintain a 99% availability and are part of the broadest selection in the industry.

Click the following link (or enter part number in "SEARCH" on website) to obtain additional part information including price, inventory and certifications: N Male Connector Crimp/Solder Attachment For RG58 PE4329

URL: http://www.pasternack.com/n-male-standard-rg58-connector-pe4329-p.aspx

The information contained in this document is accurate to the best of our knowledge and representative of the part described herein. It may be necessary to make modifications to the part and/or the documentation of the part, in order to implement improvements. Pasternack reserves the right to make such changes as required. Unless otherwise stated, all specifications are nominal. Pasternack does not make any representation or warranty regarding the suitability of the part described herein for any particular purpose, and Pasternack does not assume any liability arising out of the use of any part or documentation.

Pasternack Enterprises, Inc. • P.O. Box 16759, Irvine, CA 92623
**Phone:** (866) 727-8376 or (949) 261-1920 • **Fax:** (949) 261-7451
Sales@Pasternack.com • Techsupport@Pasternack.com

© 2016 Pasternack Enterprises All Rights Reserved

# PE4329 CAD Drawing

N Male Connector Crimp/Solder Attachment For RG58

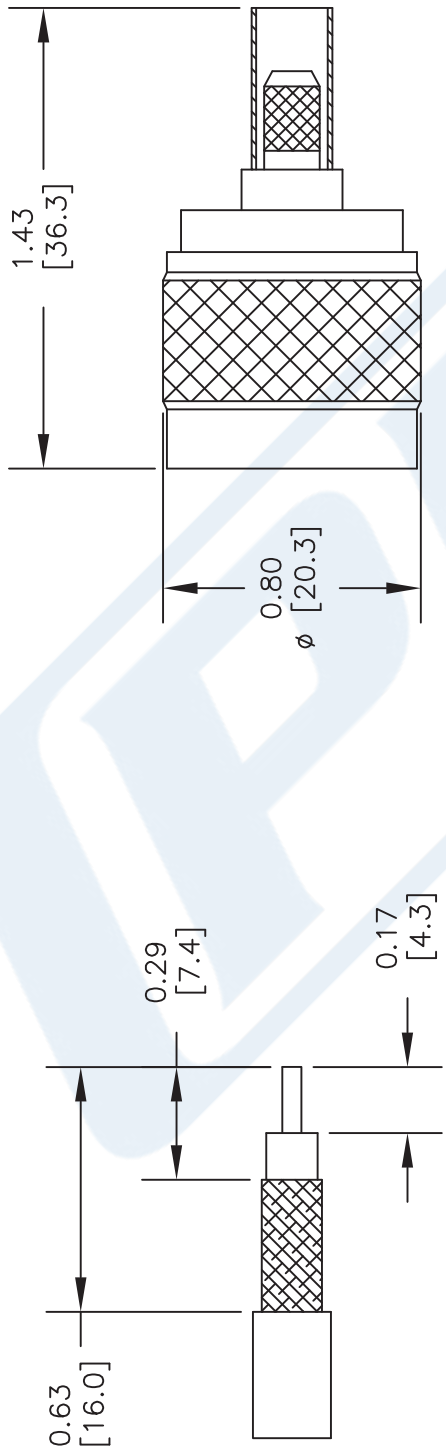


STRIPPING DIMENSIONS

CRIMP SIZE REQUIRED

CONTACT: .068" HEX CRIMP TOOL
FERRULE: .213" HEX CRIMP TOOL

NOTES:
1. UNLESS OTHERWISE SPECIFIED ALL DIMENSIONS ARE NOMINAL.
2. ALL SPECIFICATIONS ARE SUBJECT TO CHANGE WITHOUT NOTICE AT ANY TIME.
3. DIMENSIONS ARE IN INCHES [mm].
4. FITS MIL-C-17 AND EQUIVALENT CABLES.

DWG TITLE
PE4329

FSCM NO. 53919

CAD FILE 010416 | SCALE N/A | SIZE A | 2233

PASTERNACK®
THE ENGINEER'S RF SOURCE
Pasternack Enterprises, Inc.
P.O. Box 16759 | Irvine | CA | 92623
**Phone:** (949) 261-1920 | **Fax:** (949) 261-7451
**Website:** www.pasternack.com | **E-Mail:** sales@pasternack.com

© 2016 Pasternack Enterprises All Rights Reserved

PASTERNACK®
THE ENGINEER'S RF SOURCE

# Low Loss Flexible RG58 Type Coax Cable Double Shielded with Black PE Jacket

## RF Cables Technical Data Sheet PE-C195

## Configuration

- Low Loss Flexible Cable
- 2 Shield(s)

## Features

- Low Loss
- Double Shielded
- PE Jacket
- Velocity of Propagation 80%
- Shielding Effectiveness > 90 dB

## Applications

- Antenna Feeds
- Communication Systems
- Wireless Systems
- Indoor / Outdoor Uses
- Direct Burial
- Jumper Cable Assemblies

### Description

Flexible coaxial cable are ideal for applications where tight bends and continual flexure are required. Pasternack's PE-C195 is a low loss flexible RG58 type coax cable with PE jacket. The double shielding of this low loss cable provides better electrical performance than the standard RG-58 cable including excellent shielding effectiveness of better than 90 dB. This Pasternack cable's PE jacket makes it suitable for indoor/outdoor uses and direct burial applications. PE-C195 RG58 type datasheet specifications and outline drawing for this flexible cable are shown in the PDF below.

Pasternack carries a wide range of cables ready to ship same day to fit your needs. They are available in corrugated, flexible, formable or semi-rigid versions with different constructions of conductor materials, dielectric materials, shielding configurations and jacket materials. Our cables are designed to fit a wide range of performance criteria including attenuation, operating temperature, environmental factor, and power capability.

### Electrical Specifications

| Description | Minimum | Typical | Maximum | Units |
|---|---|---|---|---|
| Frequency Range | DC | | 5.8 | GHz |
| Cutoff Frequency | | 41 | | GHz |
| Impedance | | 50 | | Ohms |
| Velocity of Propagation | | 80 | | % |
| Shielding Effectiveness | 90 | | | dB |
| Jacket Spark | | | 5,000 | Vrms |
| Nominal Capacitance | | 25.4 [83.33] | | pF/ft [pF/m] |
| Input Power (Peak) | | | 2.5 | KWatts |

Click the following link (or enter part number in "SEARCH" on website) to obtain additional part information including price, inventory and certifications: Low Loss Flexible RG58 Type Coax Cable Double Shielded with Black PE Jacket PE-C195

Pasternack Enterprises, Inc. • P.O. Box 16759, Irvine, CA 92623
**Phone:** (866) 727-8376 or (949) 261-1920 • **Fax:** (949) 261-7451
Sales@Pasternack.com • Techsupport@Pasternack.com

© 2017 Pasternack Enterprises All Rights Reserved

# Low Loss Flexible RG58 Type Coax Cable Double Shielded with Black PE Jacket



### Performance by Frequency Band

| Description | F1 | F2 | F3 | F4 | F5 | Units |
|---|---|---|---|---|---|---|
| Frequency | 0.15 | 0.22 | 0.45 | 0.9 | 1.5 | GHz |
| Attenuation, Max | 4.4 | 5.4 | 7.8 | 11.1 | 14.5 | dB/100ft |
| | 14.44 | 17.72 | 25.59 | 36.42 | 47.57 | dB/100m |
| Attenuation, Typ | 4.3 | 5.2 | 7.5 | 10.7 | 13.4 | dB/100ft |
| | 14.11 | 17.06 | 24.61 | 35.1 | 43.96 | dB/100m |
| Input Power (CW), Max | 350 | 290 | 200 | 140 | 110 | Watts |

| Description | F6 | F7 | F8 | F9 | F10 | Units |
|---|---|---|---|---|---|---|
| Frequency | 1.8 | 2 | 2.5 | 5.8 | | GHz |
| Attenuation, Max | 16 | 16.9 | 19 | 29.9 | | dB/100ft |
| | 52.49 | 55.45 | 62.34 | 98.1 | | dB/100m |
| Attenuation, Typ | 15.3 | 16.1 | 18.1 | 28.2 | | dB/100ft |
| | 50.2 | 52.82 | 59.38 | 92.52 | | dB/100m |
| Input Power (CW), Max | 100 | 90 | 80 | 50 | | Watts |

## Mechanical Specifications

| | |
|---|---|
| Diameter | 0.195 in [4.95 mm] |
| Weight | 0.021 lbs/ft [0.03 Kg/m] |
| Min. Bend Radius (Installation) | 0.5 in [12.7 mm] |
| Min. Bend Radius (Repeated) | 2 in [50.8 mm] |

### Construction Specifications

| Description | Material and Plating | Diameter |
|---|---|---|
| Inner Conductor | Copper, 1 Strands | 0.037 in [0.94 mm] |
| Conductor Type | Solid | |
| Dielectric | PE (F) | 0.11 in [2.79 mm] |
| First Shield | Aluminum Tape | |

Click the following link (or enter part number in "SEARCH" on website) to obtain additional part information including price, inventory and certifications: Low Loss Flexible RG58 Type Coax Cable Double Shielded with Black PE Jacket PE-C195

Pasternack Enterprises, Inc. • P.O. Box 16759, Irvine, CA 92623
**Phone:** (866) 727-8376 or (949) 261-1920 • **Fax:** (949) 261-7451
Sales@Pasternack.com • Techsupport@Pasternack.com

© 2017 Pasternack Enterprises All Rights Reserved

Low Loss Flexible RG58 Type Coax Cable
Double Shielded with Black PE Jacket



| | | |
|---|---|---|
| Second Shield | Tinned Copper Braid | 0.139 in [3.53 mm] |
| Jacket | PE, Black | 0.195 in [4.95 mm] |

## Environmental Specifications

**Temperature**

| | |
|---|---|
| Operating Range | -40 to +85 deg C |
| Installation Range | -70 to +85 deg C |
| Storage Range | -40 to +85 deg C |

**Compliance Certifications** (see product page for current document)

**Plotted and Other Data**

Notes:

Low Loss Flexible RG58 Type Coax Cable Double Shielded with Black PE Jacket from Pasternack Enterprises has same day shipment for domestic and International orders. Our RF, microwave and millimeter wave products maintain a 99.4% availability and are part of the broadest selection in the industry.

Click the following link (or enter part number in "SEARCH" on website) to obtain additional part information including price, inventory and certifications: Low Loss Flexible RG58 Type Coax Cable Double Shielded with Black PE Jacket PE-C195

URL: https://www.pasternack.com/flexible-0.195-50-ohm-coax-cable-pe-jacket-pe-c195-p.aspx

The information contained in this document is accurate to the best of our knowledge and representative of the part described herein. It may be necessary to make modifications to the part and/or the documentation of the part, in order to implement improvements. Pasternack reserves the right to make such changes as required. Unless otherwise stated, all specifications are nominal. Pasternack does not make any representation or warranty regarding the suitability of the part described herein for any particular purpose, and Pasternack does not assume any liability arising out of the use of any part or documentation.

Pasternack Enterprises, Inc. • P.O. Box 16759, Irvine, CA 92623
**Phone:** (866) 727-8376 or (949) 261-1920 • **Fax:** (949) 261-7451
Sales@Pasternack.com • Techsupport@Pasternack.com

© 2017 Pasternack Enterprises All Rights Reserved

# PE-C195 CAD Drawing

Low Loss Flexible RG58 Type Coax Cable Double Shielded with Black PE Jacket

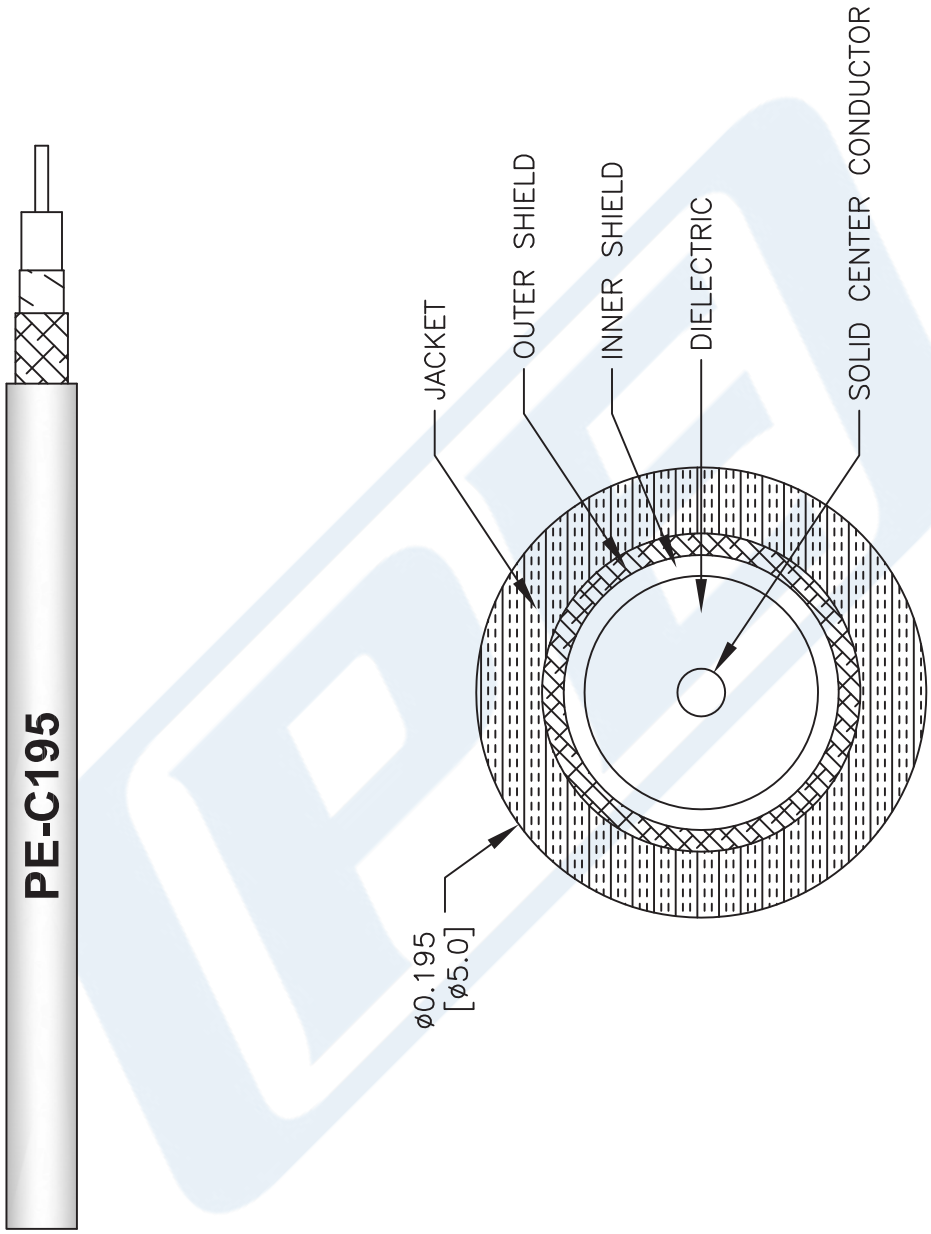


NOTES:
1. UNLESS OTHERWISE SPECIFIED ALL DIMENSIONS ARE NOMINAL.
2. ALL SPECIFICATIONS ARE SUBJECT TO CHANGE WITHOUT NOTICE AT ANY TIME.
3. DIMENSIONS ARE IN INCHES [mm].

DWG TITLE
PE-C195

CAD FILE 111716 | SCALE N/A | SIZE A | 41742

FSCM NO. 53919

PASTERNACK®
THE ENGINEER'S RF SOURCE
Pasternack Enterprises, Inc.
P.O. Box 16759 | Irvine | CA | 92623
**Phone:** (949) 261-1920 | **Fax:** (949) 261-7451
**Website:** www.pasternack.com | **E-Mail:** sales@pasternack.com

© 2017 Pasternack Enterprises All Rights Reserved