PASTERNACK
an INFINITE brand

SMP Male Bulkhead Mount Limited Detent Connector Solder Attachment for RG405, RG405 Tinned, PE-SR405FL, PE-SR405AL, 4.83 mm Diameter

RF Connectors
Technical Data Sheet

PE44483

Configuration

- Limited Detent SMP Male Connector
- MIL-STD-348A
- 50 Ohms
- Straight Body Geometry
- Connector Interface Types: RG405, RG405 Tinned, PE-SR405FL, PE-SR405AL, PE-SR405FLJ, PE-SR405TN
- Bulkhead

Features

- Max. Operating Frequency 26.5 GHz
- Good VSWR of 1.29:1
- Gold Plated Brass Contact
- Blind Mate Connector

Applications

- General Purpose Test
- Rack and Panel Mount Applications
- Custom Cable Assemblies

Description

Pasternack's PE44483 SMP male limited detent bulkhead connector with solder/solder attachment for RG405, RG405 Tinned, PE-SR405FL, PE-SR405AL, PE-SR405FLJ and PE-SR405TN (4.83 mm diameter) is part of our full line of RF components available for same-day shipping. Our SMP male connector operates up to a maximum frequency of 26.5 GHz and offers good VSWR of 1.29:1. The Pasternack blind mate connector is ideal for applications where direct visual or tactile access to the connection point is not possible, for example, when two circuit boards need to be mated. This SMP bulkhead connector allows designers to create external connections on their product enclosures, and can be used in a variety of other rack mount and panel mount applications.

Our SMP male bulkhead connector PE44483 datasheet specifications and drawing with dimensions are shown below in this PDF. Pasternack's broad catalog of RF, microwave and millimeter wave connectors allows designers to configure and customize their signal connections however they like. Whether the need is to provide an I/O for a board design, or simply create a custom cable assembly configuration, Pasternack has the right connector for the job. Pasternack can also expertly build your custom cable assemblies for you and ship same-day.

Electrical Specifications

Description	Minimum	Typical	Maximum	Units
Frequency Range	DC		26.5	GHz
VSWR			1.29:1	
Operating Voltage (AC)			335	Vrms
Test Voltage (AC)			500	Vrms
Inner Conductor DC Resistance			6	mOhms
Outer Conductor DC Resistance			2	mOhms
Insulation Resistance	5,000			MOhms

Click the following link (or enter part number in "SEARCH" on website) to obtain additional part information including price, inventory and certifications: SMP Male Bulkhead Mount Limited Detent Connector Solder Attachment for RG405, RG405 Tinned, PE-SR405FL, PE-SR405AL, 4.83 mm Diameter PE44483

Pasternack Enterprises, Inc. • P.O. Box 16759, Irvine, CA 92623
Phone: (866) 727-8376 or (949) 261-1920 • **Fax:** (949) 261-7451
Sales@Pasternack.com • Techsupport@Pasternack.com

© 2020 Pasternack Enterprises All Rights Reserved

SMP Male Bulkhead Mount Limited Detent Connector Solder Attachment for RG405, RG405 Tinned, PE-SR405FL, PE-SR405AL, 4.83 mm Diameter

Performance by Frequency

Description	F1	F2	F3	F4	F5	Units
Frequency Range	DC to 4	4 to 12	12 to 26.5			GHz
VSWR, Max	1.07:1	1.23:1	1.29:1			

Electrical Specification Notes:
Insertion loss = 0.05 x sqrt(fGHz) dB max up to 12 GHz.

Mechanical Specifications

Size

Length	0.39 in [9.91 mm]
Width/Dia.	0.25 in [6.35 mm]
Weight	0.005 lbs [2.27 g]
Mating Cycles	500 Cycles

Material Specifications

Description	Material	Plating
Contact	Brass	Gold
Insulation	PTFE	
Body	Brass	Gold

Environmental Specifications

Temperature

Operating Range	-65 to +155 deg C
Humidity	MIL-STD-202, Method 106
Shock	MIL-STD-202, Method 213, Condition A
Vibration	MIL-STD-202, Method 204, Condition B
Thermal Shock	MIL-STD-202, Method 107, Condition B

Compliance Certifications (see product page for current document)

Plotted and Other Data

Notes:

Click the following link (or enter part number in “SEARCH” on website) to obtain additional part information including price, inventory and certifications: SMP Male Bulkhead Mount Limited Detent Connector Solder Attachment for RG405, RG405 Tinned, PE-SR405FL, PE-SR405AL, 4.83 mm Diameter PE44483

Pasternack Enterprises, Inc. • P.O. Box 16759, Irvine, CA 92623
Phone: (866) 727-8376 or (949) 261-1920 • **Fax:** (949) 261-7451
Sales@Pasternack.com • Techsupport@Pasternack.com

© 2020 Pasternack Enterprises All Rights Reserved

SMP Male Bulkhead Mount Limited Detent Connector Solder Attachment for RG405, RG405 Tinned, PE-SR405FL, PE-SR405AL, 4.83 mm Diameter

RF Connectors
Technical Data Sheet

PE44483

SMP Male Bulkhead Mount Limited Detent Connector Solder Attachment for RG405, RG405 Tinned, PE-SR405FL, PE-SR405AL, 4.83 mm Diameter from Pasternack Enterprises has same day shipment for domestic and International orders. Our RF, microwave and millimeter wave products maintain a 99.4% availability and are part of the broadest selection in the industry.

Click the following link (or enter part number in “SEARCH” on website) to obtain additional part information including price, inventory and certifications: SMP Male Bulkhead Mount Limited Detent Connector Solder Attachment for RG405, RG405 Tinned, PE-SR405FL, PE-SR405AL, 4.83 mm Diameter PE44483

URL: https://www.pasternack.com/smp-male-standard-pe-sr405al-pe-sr405fl-rg405-connector-pe44483-p.aspx

The information contained in this document is accurate to the best of our knowledge and representative of the part described herein. It may be necessary to make modifications to the part and/or the documentation of the part, in order to implement improvements. Pasternack reserves the right to make such changes as required. Unless otherwise stated, all specifications are nominal. Pasternack does not make any representation or warranty regarding the suitability of the part described herein for any particular purpose, and Pasternack does not assume any liability arising out of the use of any part or documentation.

Pasternack Enterprises, Inc. • P.O. Box 16759, Irvine, CA 92623
Phone: (866) 727-8376 or (949) 261-1920 • **Fax:** (949) 261-7451
Sales@Pasternack.com • Techsupport@Pasternack.com

© 2020 Pasternack Enterprises All Rights Reserved

PE44483 CAD Drawing

SMP Male Bulkhead Mount Limited Detent Connector Solder Attachment for RG405, RG405 Tinned, PE-SR405FL, PE-SR405AL, 4.83 mm Diameter

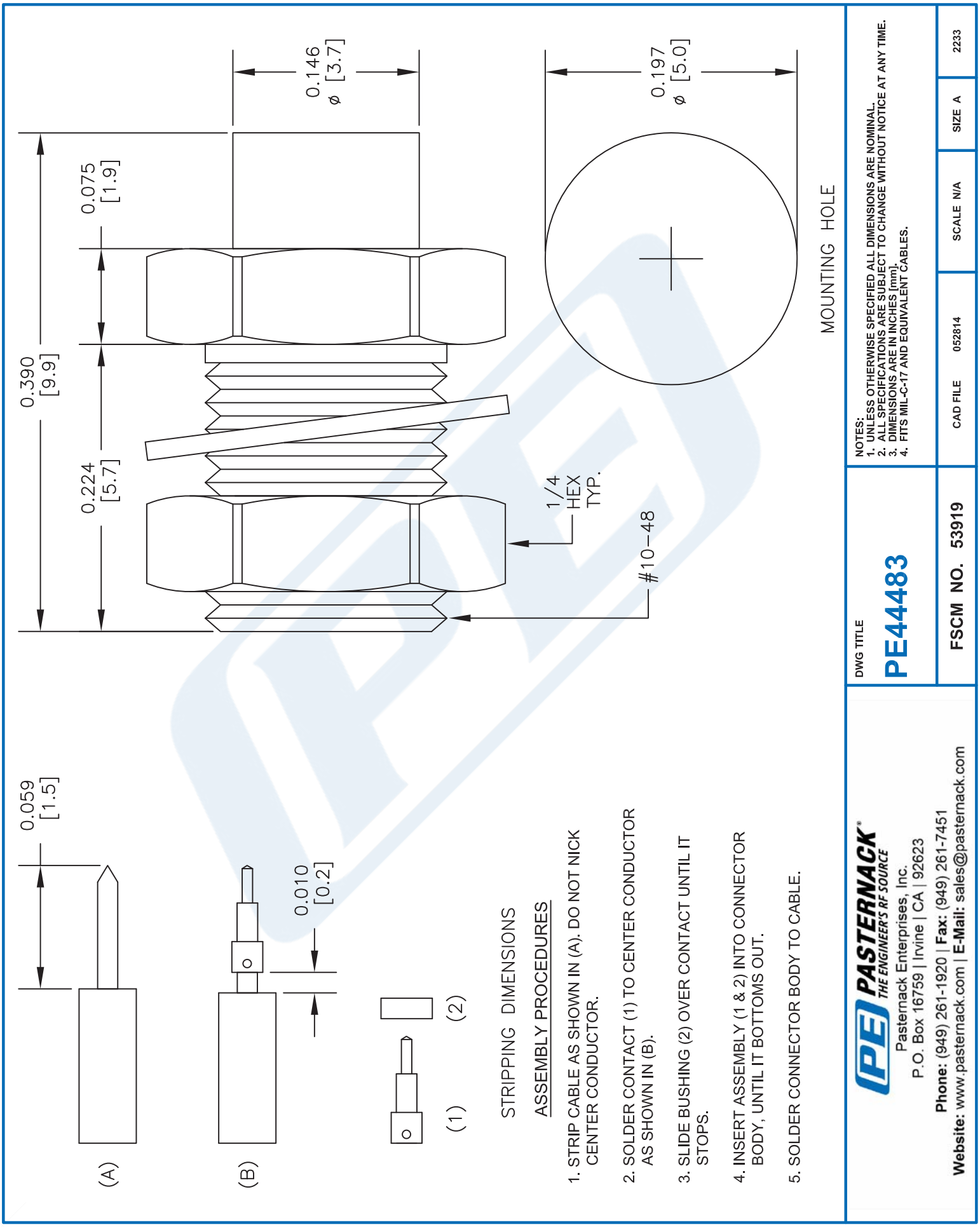

© 2020 Pasternack Enterprises All Rights Reserved

PASTERNACK®
www.pasternack.com

N Male Right Angle Precision Connector Solder Attachment For PE-SR405AL, PE-SR405FL, PE-SR405FLJ, RG405

TECHNICAL DATA SHEET PE44702

N Male Right Angle Precision Connector Solder Attachment For PE-SR405AL, PE-SR405FL, PE-SR405FLJ, RG405

Configuration

Connector	N Male
Connector Interface Type	PE-SR405AL,PE-SR405FL,PE-SR405FLJ,RG405
Cable Attachment Method (Shield/Contact)	Solder/Solder
Connector Design	Precision
Body Style	Right Angle

Electrical Specifications

Frequency Range, GHz	DC to 11
Impedance, Ohms	50

Mechanical Specifications

Size

Length, in [mm]	1.136 [28.85]
Width/Dia., in [mm]	0.79 [20.07]

Connector

Type	N Male
Contact Material and Plating	Brass, Gold
Coupling Nut Material and Plating	Brass, Nickel
Body Material and Plating	Brass, Nickel
Dielectric Type	PTFE

Compliance Certifications (visit www.Pasternack.com for current document)

RoHS Compliant	Yes

Click the following link (or enter part number in “SEARCH” on website) to obtain additional part information including price, inventory and certifications: N Male Right Angle Precision Connector Solder Attachment For PE-SR405AL, PE-SR405FL, PE-SR405FLJ, RG405 PE44702

The information contained in this document is accurate to the best of our knowledge and representative of the part described herein. It may be necessary to make modifications to the part and/or the documentation of the part, in order to implement improvements. Pasternack reserves the right to make such changes as required. Unless otherwise stated, all specifications are nominal.

Pasternack Enterprises, Inc. • P.O. Box 16759, Irvine, CA 92623
Phone: (866) 727-8376 or (949) 261-1920 • **Fax:** (949) 261-7451
Sales@Pasternack.com • Techsupport@Pasternack.com

© 2013 Pasternack Enterprises All Rights Reserved

N Male Right Angle Precision Connector Solder Attachment For PE-SR405AL, PE-SR405FL, PE-SR405FLJ, RG405

Plotted and Other Data

Notes: Values at 25 °C, sea level

N Male Right Angle Precision Connector Solder Attachment For PE-SR405AL, PE-SR405FL, PE-SR405FLJ, RG405 from Pasternack Enterprises has same day shipment for domestic and International orders. Our RF, microwave and fiber optic products maintain a 99% availability and are part of the broadest selection in the industry.

Click the following link (or enter part number in “SEARCH” on website) to obtain additional part information including price, inventory and certifications: N Male Right Angle Precision Connector Solder Attachment For PE-SR405AL, PE-SR405FL, PE-SR405FLJ, RG405 PE44702

URL: http://www.pasternack.com/n-male-standard-pe-sr405al-pe-sr405fl-pe-sr405flj-connector-pe44702-p.aspx

The information contained in this document is accurate to the best of our knowledge and representative of the part described herein. It may be necessary to make modifications to the part and/or the documentation of the part, in order to implement improvements. Pasternack reserves the right to make such changes as required. Unless otherwise stated, all specifications are nominal.

Pasternack Enterprises, Inc. • P.O. Box 16759, Irvine, CA 92623
Phone: (866) 727-8376 or (949) 261-1920 • **Fax:** (949) 261-7451
Sales@Pasternack.com • Techsupport@Pasternack.com

© 2013 Pasternack Enterprises All Rights Reserved

PE44702 CAD Drawing

N Male Right Angle Precision Connector Solder Attachment For
PE-SR405AL, PE-SR405FL, PE-SR405FLJ, RG405

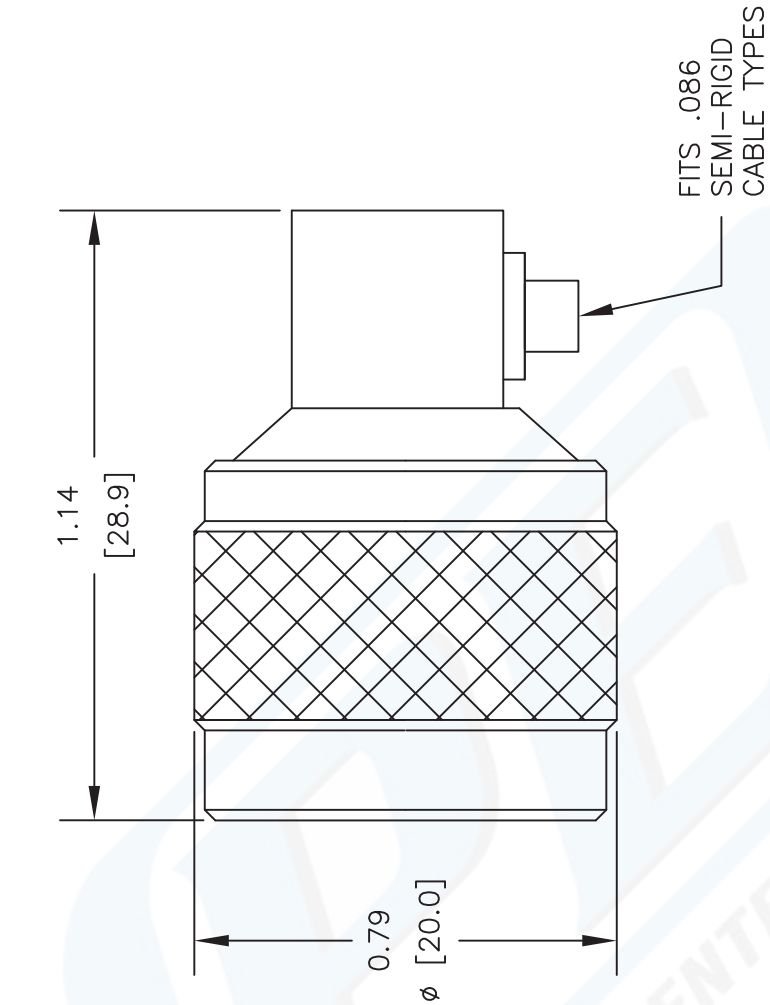

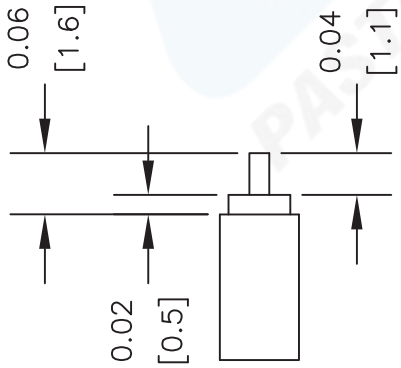

STRIPPING DIMENSIONS

ASSEMBLY PROCEDURES

1. STRIP CABLE AS SHOWN & TIN CENTER CONDUCTOR.
2. INSERT CABLE INTO BODY UNTIL OUTER CONDUCTOR BOTTOMS OUT. THE CENTER CONDUCTOR WILL PROTRUDE INTO CONTACT SLOT.
3. SOLDER CENTER CONDUCTOR INTO SLOT AND OUTER CONDUCTOR TO BODY. INSERT INSULATOR AND PRESS CAP INTO CONNECTOR BODY.

NOTES:
1. UNLESS OTHERWISE SPECIFIED ALL DIMENSIONS ARE NOMINAL.
2. ALL SPECIFICATIONS ARE SUBJECT TO CHANGE WITHOUT NOTICE AT ANY TIME.
3. DIMENSIONS ARE IN INCHES [mm].
4. FITS MIL-C-17 AND EQUIVALENT CABLES.

DWG TITLE
PE44702

REV. -	FSCM NO. 53919	CAD FILE 062311	SCALE N/A	SIZE A	2231

PASTERNACK®
Pasternack Enterprises, Inc.
P.O. Box 16759 | Irvine | CA | 92623
Phone: (949) 261-1920 | **Fax:** (949) 261-7451
Website: www.pasternack.com | **E-Mail:** sales@pasternack.com

© 2013 Pasternack Enterprises All Rights Reserved

PASTERNACK®
www.pasternack.com

086 Semi-rigid Coax Cable with Copper Outer Conductor

TECHNICAL DATA SHEET RG405/U

086 Semi-rigid Coax Cable with Copper Outer Conductor

Configuration

Inner Conductor Material and Plating	Copper Clad Steel, Silver
Dielectric Type	PTFE
Shield Materials	Copper
Jacket Material and Color	Tan

Electrical Specifications

Impedance, Ohms	50
Maximum Operating Frequency, GHz	40
Dielectric Withstanding Voltage, Vrms	5,000

Electrical Specifications by Frequency

Frequency 1

Frequency, MHz	1000
Attenuation, dB/100ft [dB/100m]	22 [72.18]
Power Handling, Watts	130

Frequency 2

Frequency, GHz	10
Attenuation, dB/100ft [dB/100m]	80 [262.47]
Power Handling, Watts	35

Frequency 3

Frequency, GHz	20
Attenuation, dB/100ft [dB/100m]	120 [393.7]
Power Handling, Watts	20

Mechanical Specifications

Temperature

Operating Range, deg C	-55 to +125

Inner Conductor

Number of Strands	1
Material	Copper Clad Steel
Plating	Silver
Diameter, in [mm]	0.02 [0.51]

Dielectric:

Type	PTFE
Diameter, in [mm]	0.066 [1.68]

Click the following link (or enter part number in “SEARCH” on website) to obtain additional part information including price, inventory and certifications: 086 Semi-rigid Coax Cable with Copper Outer Conductor RG405/U

The information contained in this document is accurate to the best of our knowledge and representative of the part described herein. It may be necessary to make modifications to the part and/or the documentation of the part, in order to implement improvements. Pasternack reserves the right to make such changes as required. Unless otherwise stated, all specifications are nominal.

Pasternack Enterprises, Inc. • P.O. Box 16759, Irvine, CA 92623
Phone: (866) 727-8376 or (949) 261-1920 • **Fax:** (949) 261-7451
Sales@Pasternack.com • Techsupport@Pasternack.com

ISO 9001 : 2008 Registered

© 2013 Pasternack Enterprises All Rights Reserved

Shield:	
Number of	1
Material 1	Copper
Diameter, in [mm]	0.087 [2.21]
Jacket:	
Color	Tan
One Time Minimum Bend Radius, in [mm]	0.05 [1.27]
Weight, lbs/ft [Kg/m]	0.015 [0.02]

Compliance Certifications (visit www.Pasternack.com for current document)

RoHS Compliant	Yes

Plotted and Other Data

Notes:	Values at 25 °C, sea level

086 Semi-rigid Coax Cable with Copper Outer Conductor from Pasternack Enterprises has same day shipment for domestic and International orders. Our RF, microwave and fiber optic products maintain a 99% availability and are part of the broadest selection in the industry.

Click the following link (or enter part number in “SEARCH” on website) to obtain additional part information including price, inventory and certifications: 086 Semi-rigid Coax Cable with Copper Outer Conductor RG405/U

URL: http://www.pasternack.com/semirigid-0.085-rg405-50-ohm-coax-cable-copper-rg405-u-p.aspx

The information contained in this document is accurate to the best of our knowledge and representative of the part described herein. It may be necessary to make modifications to the part and/or the documentation of the part, in order to implement improvements. Pasternack reserves the right to make such changes as required. Unless otherwise stated, all specifications are nominal.

Pasternack Enterprises, Inc. • P.O. Box 16759, Irvine, CA 92623
Phone: (866) 727-8376 or (949) 261-1920 • **Fax:** (949) 261-7451
Sales@Pasternack.com • Techsupport@Pasternack.com

ISO 9001 : 2008 Registered

© 2013 Pasternack Enterprises All Rights Reserved

RG405/U CAD Drawing

086 Semi-rigid Coax Cable with Copper Outer Conductor

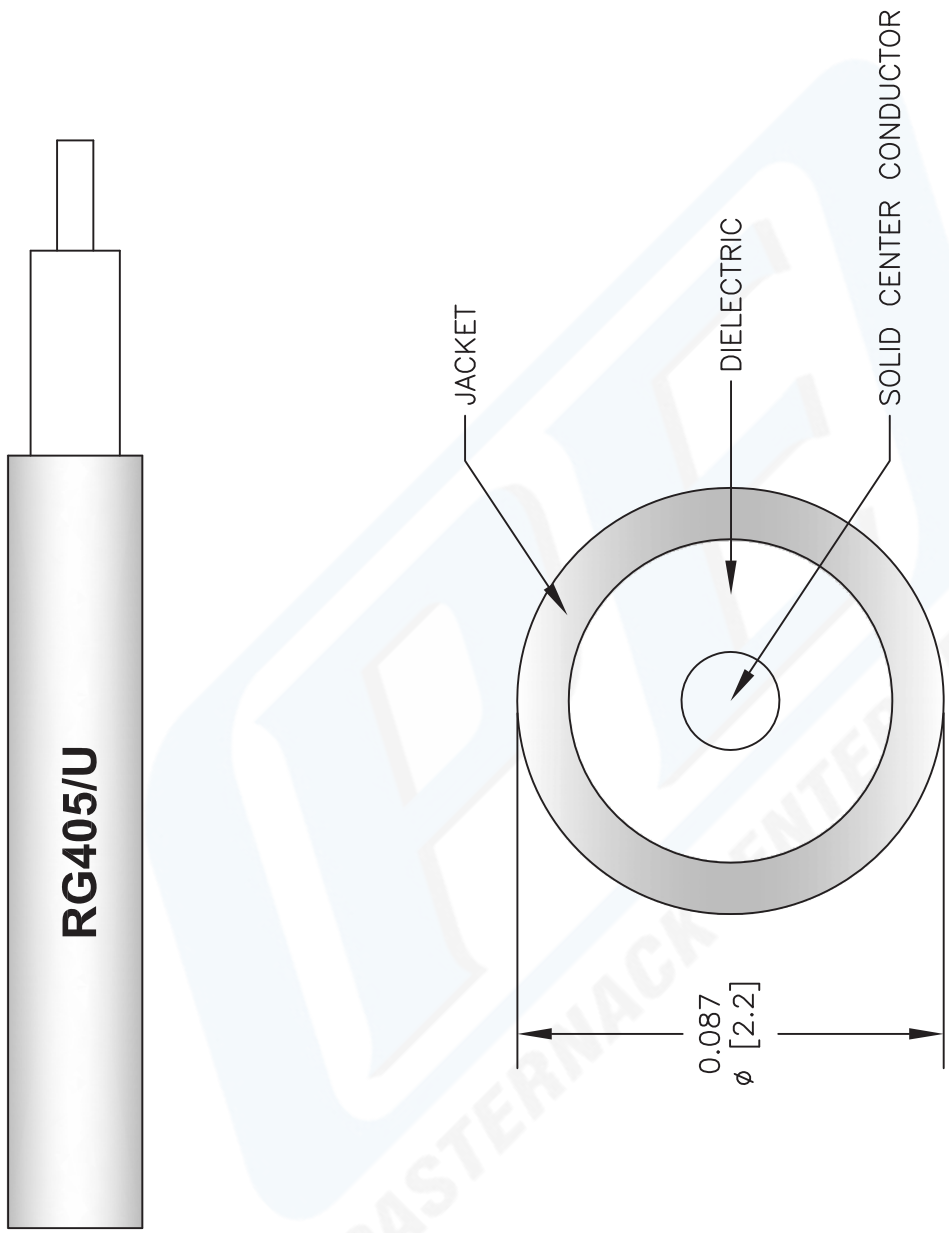

NOTES:
1. UNLESS OTHERWISE SPECIFIED ALL DIMENSIONS ARE NOMINAL.
2. ALL SPECIFICATIONS ARE SUBJECT TO CHANGE WITHOUT NOTICE AT ANY TIME.
3. DIMENSIONS ARE IN INCHES [mm].

DWG TITLE
RG405/U

FSCM NO. 53919

CAD FILE 022908 | SCALE N/A | SIZE A | 2233

PASTERNACK®
Pasternack Enterprises, Inc.
P.O. Box 16759 | Irvine | CA | 92623
Phone: (949) 261-1920 | **Fax:** (949) 261-7451
Website: www.pasternack.com | **E-Mail:** sales@pasternack.com

© 2013 Pasternack Enterprises All Rights Reserved