PASTERNACK
an INFINITE brand

# 2.2-5 Male Right Angle Low PIM Connector Solder Attachment for PE-1/4SFHC, SPP-250-LLPL, SPO-250, SPF-250

RF Connectors
Technical Data Sheet

PE45674

## Configuration

- 2.2-5 Male Connector
- 50 Ohms
- Right Angle Body Geometry
- Connector Interface Types: PE-1/4SFHC, SPP-250-LL-PL, SPO-250, SPF-250
- Low PIM Design

## Features

- Max. Operating Frequency 6 GHz
- Good VSWR of 1.35:1
- PIM levels lower than -160 dBc
- Silver Plated Brass Contact

## Applications

- General Purpose Test
- Wireless Communications
- Custom Cable Assemblies
- Low PIM Applications

### Description

Pasternack's PE45674 2.2-5 male right angle connector with solder/solder attachment for PE-1/4SFHC, SPP-250-LLPL, SPO-250 and SPF-250 is part of our full line of RF components available for same-day shipping. Our 2.2-5 male connector operates up to a maximum frequency of 6 GHz and offers good VSWR of 1.35:1. The 2.2-5 male connector also has low passive intermodulation of -160 dBc. Its right angle body geometry allows for easier connections in tight spaces.

Our 2.2-5 male right angle connector PE45674 datasheet specifications and drawing with dimensions are shown below in this PDF. Pasternack's broad catalog of RF, microwave and millimeter wave connectors allows designers to configure and customize their signal connections however they like. Whether the need is to provide an I/O for a board design, or simply create a custom cable assembly configuration, Pasternack has the right connector for the job. Pasternack can also expertly build your custom cable assemblies for you and ship same-day.

### Electrical Specifications

| Description | Minimum | Typical | Maximum | Units |
|---|---|---|---|---|
| Frequency Range | DC | | 6 | GHz |
| VSWR | | | 1.35:1 | |
| Passive Intermodulation | | | -160 | dBc |
| Dielectric Withstanding Voltage (AC) | | | 750 | Vrms |

### Performance by Frequency

| Description | F1 | F2 | F3 | F4 | F5 | Units |
|---|---|---|---|---|---|---|
| Frequency Range | DC to 3 | 3 to 6 | | | | GHz |
| VSWR, Max | 1.25:1 | 1.35:1 | | | | |

Click the following link (or enter part number in "SEARCH" on website) to obtain additional part information including price, inventory and certifications: 2.2-5 Male Right Angle Low PIM Connector Solder Attachment for PE-1/4SFHC, SPP-250-LL-PL, SPO-250, SPF-250 PE45674

Pasternack Enterprises, Inc. • P.O. Box 16759, Irvine, CA 92623
**Phone:** (866) 727-8376 or (949) 261-1920 • **Fax:** (949) 261-7451
Sales@Pasternack.com • Techsupport@Pasternack.com

© 2020 Pasternack Enterprises All Rights Reserved

# 2.2-5 Male Right Angle Low PIM Connector Solder Attachment for PE-1/4SFHC, SPP-250-LLPL, SPO-250, SPF-250

RF Connectors
Technical Data Sheet

PE45674

## Mechanical Specifications

**Size**

| | |
|---|---|
| Length | 0.98 in [24.89 mm] |
| Width/Dia. | 0.68 in [17.27 mm] |
| Height | 0.68 in [17.27 mm] |
| Weight | 0.05 lbs [22.68 g] |

**Material Specifications**

| Description | Material | Plating |
|---|---|---|
| Contact | Brass | Silver |
| Insulation | PTFE | |
| Body | Brass | Tri-Metal |
| Coupling Nut | Brass | Tri-Metal |
| O-Ring | Silicone | |

## Environmental Specifications

**Temperature**

| | |
|---|---|
| Operating Range | -40 to +155 deg C |

## Compliance Certifications (see product page for current document)

## Plotted and Other Data

Notes:

Click the following link (or enter part number in “SEARCH” on website) to obtain additional part information including price, inventory and certifications: 2.2-5 Male Right Angle Low PIM Connector Solder Attachment for PE-1/4SFHC, SPP-250-LL-PL, SPO-250, SPF-250 PE45674

Pasternack Enterprises, Inc. • P.O. Box 16759, Irvine, CA 92623
**Phone:** (866) 727-8376 or (949) 261-1920 • **Fax:** (949) 261-7451
Sales@Pasternack.com • Techsupport@Pasternack.com

© 2020 Pasternack Enterprises All Rights Reserved

# 2.2-5 Male Right Angle Low PIM Connector Solder Attachment for PE-1/4SFHC, SPP-250-LLPL, SPO-250, SPF-250

## RF Connectors
## Technical Data Sheet

PE45674

2.2-5 Male Right Angle Low PIM Connector Solder Attachment for PE-1/4SFHC, SPP-250-LLPL, SPO-250, SPF-250 from Pasternack Enterprises has same day shipment for domestic and International orders. Our RF, microwave and millimeter wave products maintain a 99.4% availability and are part of the broadest selection in the industry.

Click the following link (or enter part number in “SEARCH” on website) to obtain additional part information including price, inventory and certifications: 2.2-5 Male Right Angle Low PIM Connector Solder Attachment for PE-1/4SFHC, SPP-250-LLPL, SPO-250, SPF-250 PE45674

URL: https://www.pasternack.com/2.2-5-male-pe-1-4sfhc-spp-250-llpl-connector-pe45674-p.aspx

The information contained in this document is accurate to the best of our knowledge and representative of the part described herein. It may be necessary to make modifications to the part and/or the documentation of the part, in order to implement improvements. Pasternack reserves the right to make such changes as required. Unless otherwise stated, all specifications are nominal. Pasternack does not make any representation or warranty regarding the suitability of the part described herein for any particular purpose, and Pasternack does not assume any liability arising out of the use of any part or documentation.

Pasternack Enterprises, Inc. • P.O. Box 16759, Irvine, CA 92623
**Phone:** (866) 727-8376 or (949) 261-1920 • **Fax:** (949) 261-7451
Sales@Pasternack.com • Techsupport@Pasternack.com

© 2020 Pasternack Enterprises All Rights Reserved

# PE45674 CAD Drawing

2.2-5 Male Right Angle Low PIM Connector Solder Attachment
for PE-1/4SFHC, SPP-250-LLPL, SPO-250, SPF-250

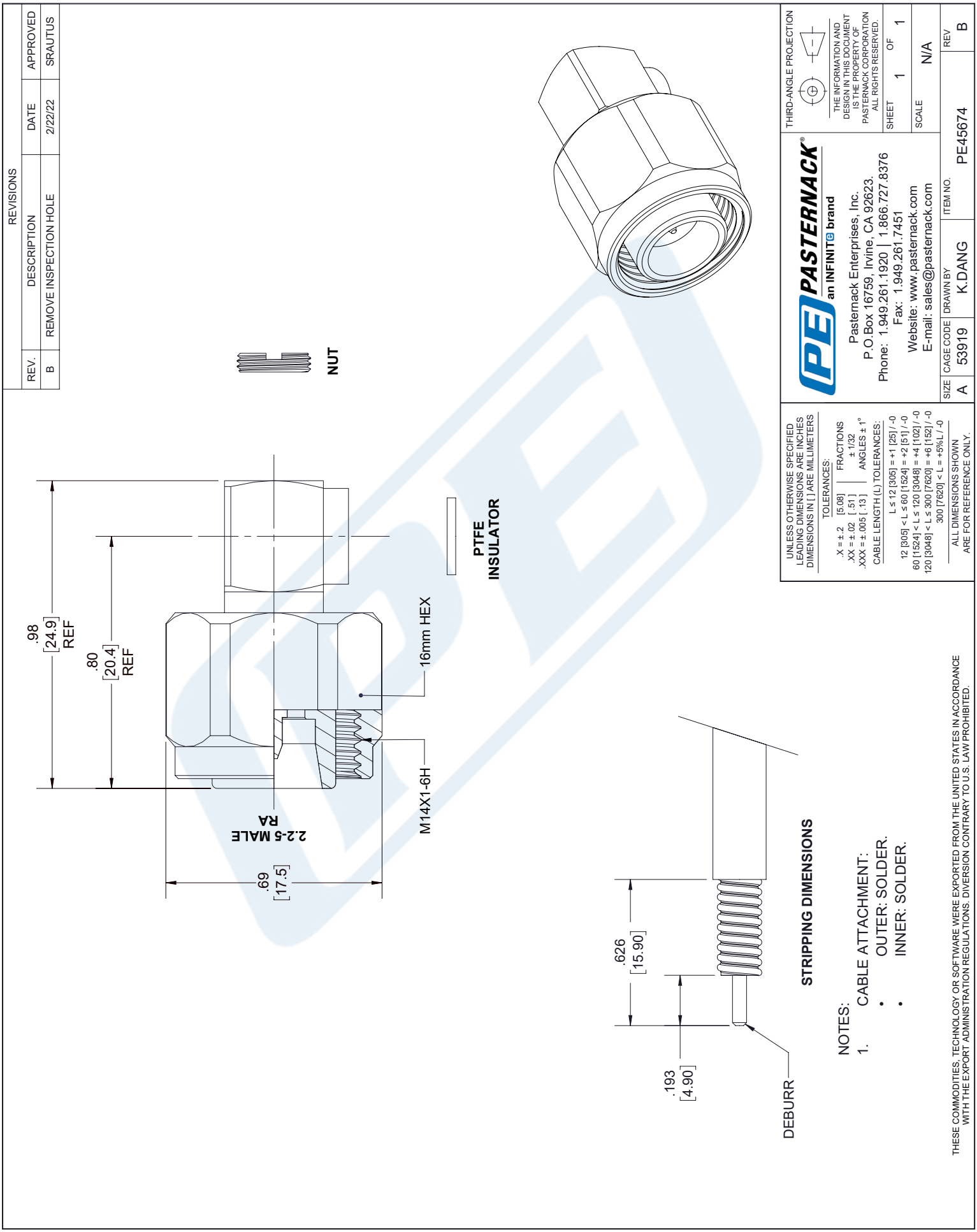

PASTERNACK®
THE ENGINEER'S RF SOURCE

# N Male Right Angle Connector Solder Attachment for SPP-250-LLPL, Low PIM



## Configuration

- N Male Connector
- 50 Ohms
- Right Angle Body Geometry
- SPP-250-LLPL Interface Type
- Solder/Solder Attachment

## Features

- Max. Operating Frequency 6 GHz
- Good VSWR of 1.3:1
- PIM levels lower than -165 dBc
- Silver Plated Brass Contact

## Applications

- General Purpose Test
- Custom Cable Assemblies
- Low PIM Interconnects
- Distributed Antenna Systems (DAS)
- Low PIM Jumpers
- Low PIM Testing
- Low PIM Connections

### Description

Pasternack's PE45428 type N male right angle connector with solder/solder attachment for SPP-250-LLPL is part of our full line of RF components available for same-day shipping. Our type N male connector operates up to a maximum frequency of 6 GHz and offers good VSWR of 1.3:1. The type N male connector also has low passive intermodulation of -165 dBc. Its right angle body geometry allows for easier connections in tight spaces.

Our type N male right angle connector PE45428 datasheet specifications and drawing with dimensions are shown below in this PDF. Pasternack's broad catalog of RF, microwave and millimeter wave connectors allows designers to configure and customize their signal connections however they like. Whether the need is to provide an I/O for a board design, or simply create a custom cable assembly configuration, Pasternack has the right connector for the job. Pasternack can also expertly build your custom cable assemblies for you and ship same-day.

### Electrical Specifications

| Description | Minimum | Typical | Maximum | Units |
|---|---|---|---|---|
| Frequency Range | DC | | 6 | GHz |
| VSWR | | | 1.3:1 | |
| Insertion Loss | | | 0.1 | dB |
| Passive Intermodulation | | | -165 | dBc |
| Operating Voltage (AC) | | | 250 | Vrms |
| Insulation Resistance | 5,000 | | | MOhms |

Electrical Specification Notes:
Insertion Loss is 0.04*sqrt(FGHz)

Click the following link (or enter part number in "SEARCH" on website) to obtain additional part information including price, inventory and certifications: N Male Right Angle Connector Solder Attachment for SPP-250-LLPL, Low PIM PE45428

Pasternack Enterprises, Inc. • P.O. Box 16759, Irvine, CA 92623
**Phone:** (866) 727-8376 or (949) 261-1920 • **Fax:** (949) 261-7451
Sales@Pasternack.com • Techsupport@Pasternack.com

© 2018 Pasternack Enterprises All Rights Reserved

# N Male Right Angle Connector Solder Attachment for SPP-250-LLPL, Low PIM



### Material Specifications

| Description | Material | Plating |
|---|---|---|
| Contact | Brass | Silver |
| Insulation | PTFE | |
| Body | Brass | Tri-Metal |
| Coupling Nut | Brass | Tri-Metal |
| Gasket | Silicone Rubber | |

## Environmental Specifications

**Temperature**

Operating Range -55 to +165 deg C

## Compliance Certifications (see product page for current document)

## Plotted and Other Data

Notes:

Click the following link (or enter part number in "SEARCH" on website) to obtain additional part information including price, inventory and certifications: N Male Right Angle Connector Solder Attachment for SPP-250-LLPL, Low PIM PE45428

Pasternack Enterprises, Inc. • P.O. Box 16759, Irvine, CA 92623
**Phone:** (866) 727-8376 or (949) 261-1920 • **Fax:** (949) 261-7451
Sales@Pasternack.com • Techsupport@Pasternack.com

© 2018 Pasternack Enterprises All Rights Reserved

# N Male Right Angle Connector Solder Attachment for SPP-250-LLPL, Low PIM



**Assembly Instruction**

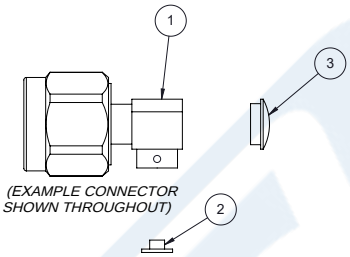


1. STRIP CABLE AS SHOWN, CHAMFER CENTER CONDUCTOR AND DEBURR CABLE.

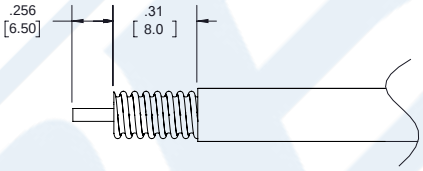


2. SLIDE INSULATOR (2) OVER CABLE CENTER CONDUCTOR AND WRAP THE CABLE BY SOLDER WIRE.

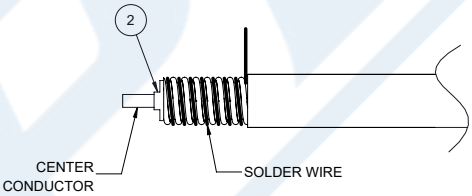


3. PUSH THE CONNECTOR BODY INTO THE CABLE, UNTIL IT STOPS. SOLDER THE CONNECTOR BODY WITH CABLE. SOLDER THE INNER CONDUCTOR. PRESS THE CAP (3) INTO BODY AND COVER HEATSHRINK SLEEVE.

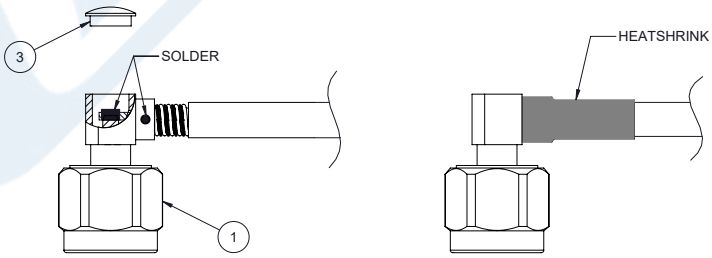


Click the following link (or enter part number in "SEARCH" on website) to obtain additional part information including price, inventory and certifications: N Male Right Angle Connector Solder Attachment for SPP-250-LLPL, Low PIM PE45428

Pasternack Enterprises, Inc. • P.O. Box 16759, Irvine, CA 92623
**Phone:** (866) 727-8376 or (949) 261-1920 • **Fax:** (949) 261-7451
Sales@Pasternack.com • Techsupport@Pasternack.com

© 2018 Pasternack Enterprises All Rights Reserved

# N Male Right Angle Connector Solder Attachment for SPP-250-LLPL, Low PIM

## RF Connectors Technical Data Sheet PE45428

N Male Right Angle Connector Solder Attachment for SPP-250-LLPL, Low PIM from Pasternack Enterprises has same day shipment for domestic and International orders. Our RF, microwave and millimeter wave products maintain a 99.4% availability and are part of the broadest selection in the industry.

Click the following link (or enter part number in “SEARCH” on website) to obtain additional part information including price, inventory and certifications: N Male Right Angle Connector Solder Attachment for SPP-250-LLPL, Low PIM PE45428

URL: https://www.pasternack.com/n-male-spp-250-llpl-connector-pe45428-p.aspx

The information contained in this document is accurate to the best of our knowledge and representative of the part described herein. It may be necessary to make modifications to the part and/or the documentation of the part, in order to implement improvements. Pasternack reserves the right to make such changes as required. Unless otherwise stated, all specifications are nominal. Pasternack does not make any representation or warranty regarding the suitability of the part described herein for any particular purpose, and Pasternack does not assume any liability arising out of the use of any part or documentation.

Pasternack Enterprises, Inc. • P.O. Box 16759, Irvine, CA 92623
**Phone:** (866) 727-8376 or (949) 261-1920 • **Fax:** (949) 261-7451
Sales@Pasternack.com • Techsupport@Pasternack.com

© 2018 Pasternack Enterprises All Rights Reserved

# PE45428 CAD Drawing

N Male Right Angle Connector Solder Attachment for SPP-250-LLPL, Low PIM

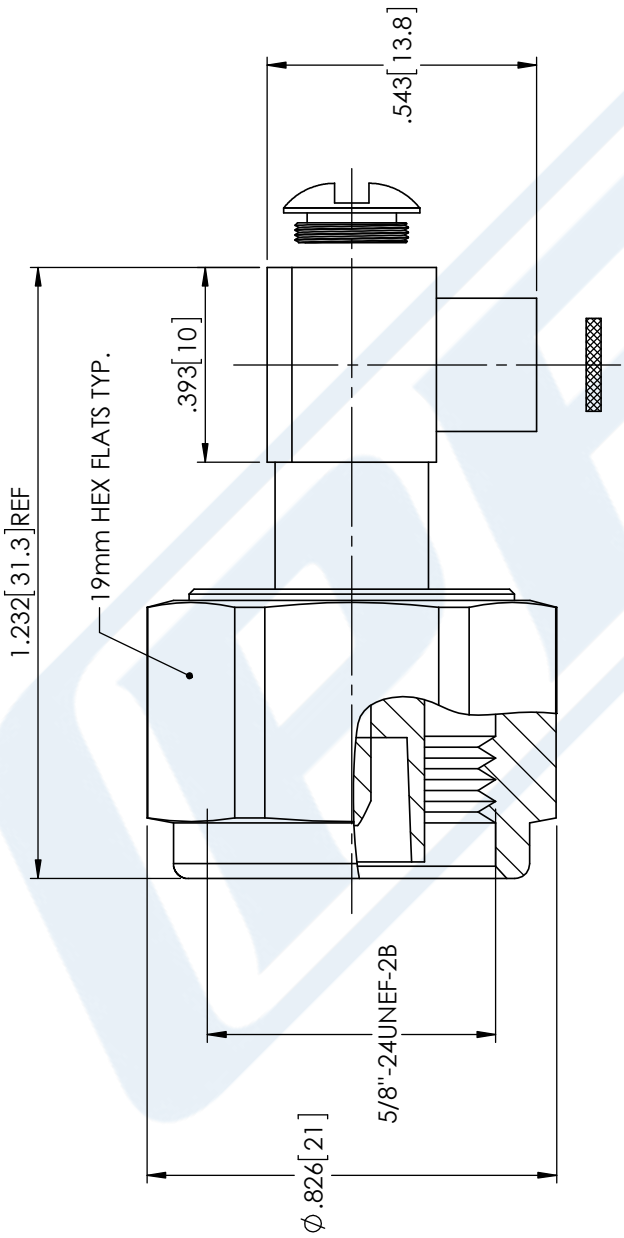


| STANDARD TOLERANCES | |
|---|---|
| .X | ±0.2 |
| .XX | ±0.01 |
| .XXX | ±0.005 |

*STANDARD TOLERANCES APPLY ONLY TO DIMENSIONS IN INCHES

NOTES:
1. UNLESS OTHERWISE SPECIFIED ALL DIMENSIONS ARE NOMINAL.
2. ALL SPECIFICATIONS ARE SUBJECT TO CHANGE WITHOUT NOTICE AT ANY TIME
3. DIMENSIONS ARE IN INCHES [mm].

DWG TITLE PE45428

CAD FILE 11/22/17 | SCALE N/A | SIZE A | CN2245

CAGE CODE 53919

PASTERNACK® THE ENGINEER'S RF SOURCE
Pasternack Enterprises, Inc.
P.O. Box 16759 | Irvine | CA | 92623
**Phone:** (949) 261-1920 | **Fax:** (949) 261-7451
**Website:** www.pasternack.com | **E-Mail:** sales@pasternack.com

© 2018 Pasternack Enterprises All Rights Reserved

PASTERNACK®
THE ENGINEER'S RF SOURCE

# Low Loss SPP-250-LLPL Plenum Rated Corrugated Coax Cable with Blue FEP Jacket Superflexible

**RF Cables**
**Technical Data Sheet**

TIMES MICROWAVE SYSTEMS An Amphenol Company

**SPP-250-LLPL**

## Times Microwave Systems Coax Cable Specification

### Configuration

- Low Loss, Plenum Corrugated Cable

### Features

- PIM < -160 dBc
- UL910 Plenum Rated Cable
- Lightweight and Extremely Flexible
- Low Loss
- Great Shielding >100 dB
- UV Resistant Jacket

### Applications

- Distributed Antenna Systems (DAS)
- Plenum Installations
- Small Cells
- Multi-Carrier Communication Systems
- PIM Testing

### Description

SPP-250-LLPL low loss plenum rated coax cable by Times Microwave is part of our full line of RF components available for same-day shipping. The SPP-250-LLPL coaxial cable features a low loss dielectric, solid copper center conductor and a helically corrugated, copper outer conductor. These features combine to make the Times Microwave SPP-250-LLPL an extremely flexible, low PIM coax cable that is well suited for Distributed Antenna Systems (DAS), plenum installations or small cells. The tough, FEP jacket provides moisture and UV protection.

Our datasheet specifications and drawing with dimensions for Times Microwave SPP-250-LLPL coax cable are shown below in this PDF. Whether the need is to provide a low PIM jumper connection, low PIM feeder cable or simply create a custom cable assembly configuration, Pasternack has the right SPP-250-LLPL cable assemblies for the job.

### Electrical Specifications

| Description | Minimum | Typical | Maximum | Units |
|---|---|---|---|---|
| Frequency Range | DC | | 5.8 | GHz |
| Impedance | | 50 | | Ohms |
| Velocity of Propagation | | 76 | | % |
| Shielding Effectiveness | 100 | | | dB |
| Passive Intermodulation | | | -160 | dBc |
| Inner Conductor DC Resistance | | | 3 | Ohms/1000ft |
| Nominal Capacitance | | 27 [88.58] | | pF/ft [pF/m] |
| Nominal Inductance | | 0.067 [0.22] | | uH/ft [uH/m] |

Click the following link (or enter part number in "SEARCH" on website) to obtain additional part information including price, inventory and certifications: Low Loss SPP-250-LLPL Plenum Rated Corrugated Coax Cable with Blue FEP Jacket Superflexible SPP-250-LLPL

Pasternack Enterprises, Inc. • P.O. Box 16759, Irvine, CA 92623
**Phone:** (866) 727-8376 or (949) 261-1920 • **Fax:** (949) 261-7451
Sales@Pasternack.com • Techsupport@Pasternack.com

© 2018 Pasternack Enterprises All Rights Reserved

# Low Loss SPP-250-LLPL Plenum Rated Corrugated Coax Cable with Blue FEP Jacket Superflexible



### Performance by Frequency Band

| Description | F1 | F2 | F3 | F4 | F5 | Units |
|---|---|---|---|---|---|---|
| Frequency | 0.45 | 1.9 | 2.3 | 4.9 | 5.8 | GHz |
| Attenuation, Typ | 3.8 | 8.1 | 9 | 13.5 | 14.8 | dB/100ft |
| | 12.47 | 26.57 | 29.53 | 44.29 | 48.56 | dB/100m |
| Input Power (CW), Max | 1,010 | 470 | 430 | 280 | 260 | Watts |

## Mechanical Specifications

| | |
|---|---|
| Diameter | 0.28 in [7.11 mm] |
| Weight | 0.072 lbs/ft [0.11 Kg/m] |
| Min. Bend Radius (Installation) | 1.25 in [31.75 mm] |
| Bending Moment | 0.8 lbs-ft [1.08 N-m] |

### Construction Specifications

| Description | Material and Plating | Diameter |
|---|---|---|
| Inner Conductor | Copper, 1 Strands | 0.068 in [1.73 mm] |
| Conductor Type | Solid | |
| Dielectric | PTFE | 0.19 in [4.83 mm] |
| Outer Conductor | Copper<br>Corrugated | 0.25 in [6.35 mm] |
| Jacket | FEP, Blue | 0.28 in [7.11 mm] |

## Environmental Specifications

**Temperature**

| | |
|---|---|
| Operating Range | -55 to +200 deg C |

Click the following link (or enter part number in "SEARCH" on website) to obtain additional part information including price, inventory and certifications: Low Loss SPP-250-LLPL Plenum Rated Corrugated Coax Cable with Blue FEP Jacket Superflexible SPP-250-LLPL

Pasternack Enterprises, Inc. • P.O. Box 16759, Irvine, CA 92623
**Phone:** (866) 727-8376 or (949) 261-1920 • **Fax:** (949) 261-7451
Sales@Pasternack.com • Techsupport@Pasternack.com

© 2018 Pasternack Enterprises All Rights Reserved

# Low Loss SPP-250-LLPL Plenum Rated Corrugated Coax Cable with Blue FEP Jacket Superflexible



**Compliance Certifications** (see product page for current document)

**Plotted and Other Data**

Notes:

Low Loss SPP-250-LLPL Plenum Rated Corrugated Coax Cable with Blue FEP Jacket Superflexible from Pasternack Enterprises has same day shipment for domestic and International orders. Our RF, microwave and millimeter wave products maintain a 99.4% availability and are part of the broadest selection in the industry.

Click the following link (or enter part number in "SEARCH" on website) to obtain additional part information including price, inventory and certifications: Low Loss SPP-250-LLPL Plenum Rated Corrugated Coax Cable with Blue FEP Jacket Superflexible SPP-250-LLPL

URL: https://www.pasternack.com/low-loss-corrugated-spp250llpl-fep-jacket-spp-250-llpl-p.aspx

The information contained in this document is accurate to the best of our knowledge and representative of the part described herein. It may be necessary to make modifications to the part and/or the documentation of the part, in order to implement improvements. Pasternack reserves the right to make such changes as required. Unless otherwise stated, all specifications are nominal. Pasternack does not make any representation or warranty regarding the suitability of the part described herein for any particular purpose, and Pasternack does not assume any liability arising out of the use of any part or documentation.

Pasternack Enterprises, Inc. • P.O. Box 16759, Irvine, CA 92623
**Phone:** (866) 727-8376 or (949) 261-1920 • **Fax:** (949) 261-7451
Sales@Pasternack.com • Techsupport@Pasternack.com

© 2018 Pasternack Enterprises All Rights Reserved

# SPP-250-LLPL CAD Drawing

Low Loss SPP-250-LLPL Plenum Rated Corrugated Coax
Cable with Blue FEP Jacket Superflexible

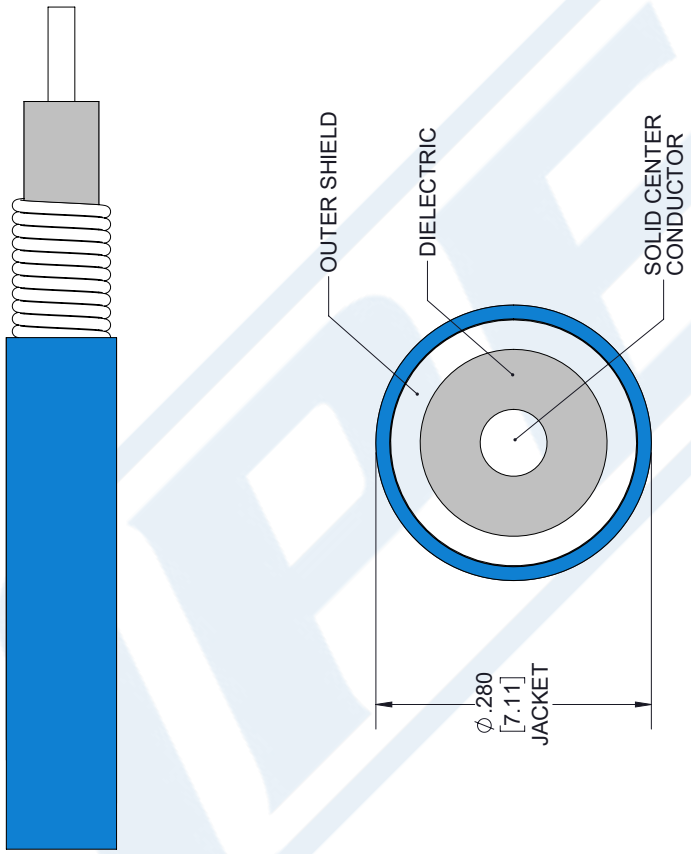


SECTION VIEW

| STANDARD TOLERANCES | |
|---|---|
| .X | ±0.2 |
| .XX | ±0.01 |
| .XXX | ±0.005 |

*STANDARD TOLERANCES APPLY ONLY TO DIMENSIONS IN INCHES

NOTES:
1. UNLESS OTHERWISE SPECIFIED ALL DIMENSIONS ARE NOMINAL.
2. ALL SPECIFICATIONS ARE SUBJECT TO CHANGE WITHOUT NOTICE AT ANY TIME
3. DIMENSIONS ARE IN INCHES [mm].

DWG TITLE: SPP-250-LLPL

CAD FILE 022118 | SCALE N/A | SIZE A | 7361

CAGE CODE 53919

PASTERNACK® THE ENGINEER'S RF SOURCE
Pasternack Enterprises, Inc.
P.O. Box 16759 | Irvine | CA | 92623
**Phone:** (949) 261-1920 | **Fax:** (949) 261-7451
**Website:** www.pasternack.com | **E-Mail:** sales@pasternack.com

© 2018 Pasternack Enterprises All Rights Reserved