PASTERNACK®
THE ENGINEER'S RF SOURCE

# SMP Female Right Angle Push-On Connector Crimp/ Solder Attachment for RG316, RG174, LMR-100



## Configuration

- Push-On SMP Female Connector
- MIL-STD-348A
- 50 Ohms
- Right Angle Body Geometry
- RG316, RG174, LMR-100 Interface Type
- Crimp/Solder Attachment

### Electrical Specifications

| Description | Minimum | Typical | Maximum | Units |
|---|---|---|---|---|
| Frequency Range | DC | | 3 | GHz |
| VSWR | | | 1.3:1 | |
| Operating Voltage (AC) | | | 350 | Vrms |

### Mechanical Specifications

**Size**

| | |
|---|---|
| Length | 0.295 in [7.49 mm] |
| Width/Dia. | 0.157 in [3.99 mm] |
| Height | 0.311 in [7.9 mm] |
| Weight | 0.00736 lbs [3.34 g] |

**Material Specifications**

| Description | Material | Plating |
|---|---|---|
| Contact | Beryllium Copper | Gold 30µ in. minimum |
| Insulation | Teflon | |
| Outer Conductor | Beryllium Copper | Gold 3µ in. minimum |
| Body | Brass | Gold 3µ in. minimum |

### Environmental Specifications

**Temperature**

| | |
|---|---|
| Operating Range | -65 to 165 deg C |

Click the following link (or enter part number in "SEARCH" on website) to obtain additional part information including price, inventory and certifications: SMP Female Right Angle Push-On Connector Crimp/Solder Attachment for RG316, RG174, LMR-100 PE45128

Pasternack Enterprises, Inc. • P.O. Box 16759, Irvine, CA 92623
**Phone:** (866) 727-8376 or (949) 261-1920 • **Fax:** (949) 261-7451
Sales@Pasternack.com • Techsupport@Pasternack.com

© 2016 Pasternack Enterprises All Rights Reserved

# SMP Female Right Angle Push-On Connector Crimp/ Solder Attachment for RG316, RG174, LMR-100



**Compliance Certifications** (see product page for current document)

**Plotted and Other Data**

Notes:

SMP Female Right Angle Push-On Connector Crimp/Solder Attachment for RG316, RG174, LMR-100 from Pasternack Enterprises has same day shipment for domestic and International orders. Our RF, microwave and millimeter wave products maintain a 99% availability and are part of the broadest selection in the industry.

Click the following link (or enter part number in "SEARCH" on website) to obtain additional part information including price, inventory and certifications: SMP Female Right Angle Push-On Connector Crimp/Solder Attachment for RG316, RG174, LMR-100 PE45128

URL: https://www.pasternack.com/smp-female-push-on-rg316-rg174-lmr-100-connector-pe45128-p.aspx

The information contained in this document is accurate to the best of our knowledge and representative of the part described herein. It may be necessary to make modifications to the part and/or the documentation of the part, in order to implement improvements. Pasternack reserves the right to make such changes as required. Unless otherwise stated, all specifications are nominal. Pasternack does not make any representation or warranty regarding the suitability of the part described herein for any particular purpose, and Pasternack does not assume any liability arising out of the use of any part or documentation.

Pasternack Enterprises, Inc. • P.O. Box 16759, Irvine, CA 92623
**Phone:** (866) 727-8376 or (949) 261-1920 • **Fax:** (949) 261-7451
Sales@Pasternack.com • Techsupport@Pasternack.com

© 2016 Pasternack Enterprises All Rights Reserved

# PE45128 CAD Drawing

SMP Female Right Angle Push-On Connector Crimp/
Solder Attachment for RG316, RG174, LMR-100

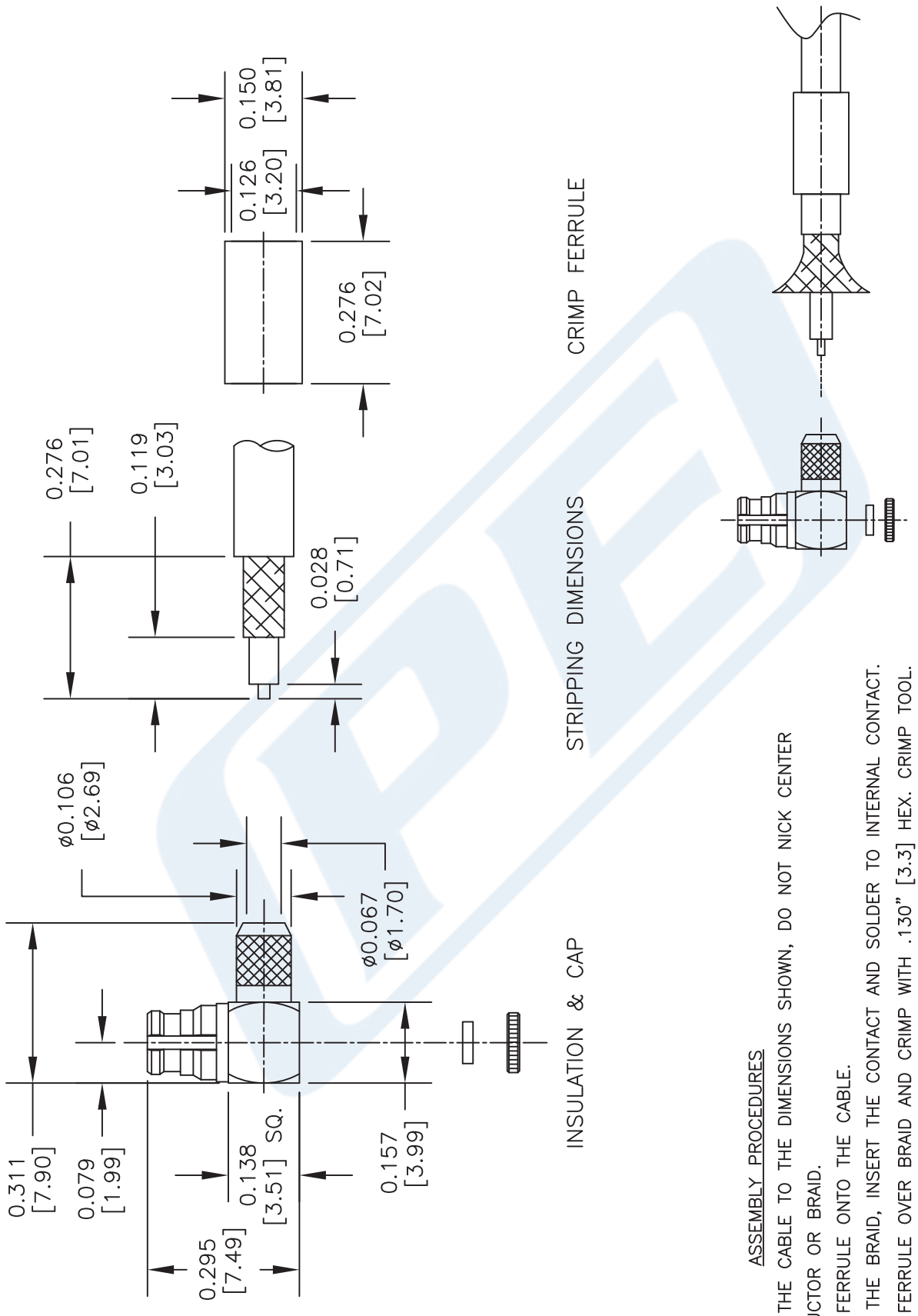


ASSEMBLY PROCEDURES

1. STRIP THE CABLE TO THE DIMENSIONS SHOWN, DO NOT NICK CENTER CONDUCTOR OR BRAID.
2. SLIDE FERRULE ONTO THE CABLE.
3. FLARE THE BRAID, INSERT THE CONTACT AND SOLDER TO INTERNAL CONTACT.
4. SLIDE FERRULE OVER BRAID AND CRIMP WITH .130" [3.3] HEX. CRIMP TOOL.
5. INSERT THE INSULATION AND THE CAP.

NOTES:
1. UNLESS OTHERWISE SPECIFIED ALL DIMENSIONS ARE NOMINAL.
2. ALL SPECIFICATIONS ARE SUBJECT TO CHANGE WITHOUT NOTICE AT ANY TIME.
3. DIMENSIONS ARE IN INCHES [mm].

DWG TITLE
PE45128

FSCM NO. 53919

CAD FILE 021015 | SCALE N/A | SIZE A | 200

PASTERNACK® THE ENGINEER'S RF SOURCE
Pasternack Enterprises, Inc.
P.O. Box 16759 | Irvine | CA | 92623
**Phone:** (949) 261-1920 | **Fax:** (949) 261-7451
**Website:** www.pasternack.com | **E-Mail:** sales@pasternack.com

© 2016 Pasternack Enterprises All Rights Reserved

PASTERNACK
an INFINITE brand

# TNC Male Connector Crimp/Crimp Attachment for RG174, RG316, RG188, LMR-100, PE-B100, PE-C100, .100 inch

RF Connectors
Technical Data Sheet

PE45527

## Configuration

- TNC Male Connector
- 50 Ohms
- Straight Body Geometry
- Connector Interface Types: RG174, RG316, RG188, LMR-100, PE-B100, PE-C100, .100 inch

## Features

- Max. Operating Frequency 3 GHz
- Good VSWR of 1.3:1
- Gold Plated Brass Contact
- 30 µin minimum contact plating

## Applications

- General Purpose Test
- Custom Cable Assemblies

### Description

Pasternack's PE45527 TNC male connector with crimp/solder attachment for RG174, RG316, RG188, LMR-100, PE-B100, PE-C100 and .100 inch is part of our full line of RF components available for same-day shipping. Our TNC male connector operates up to a maximum frequency of 3 GHz and offers good VSWR of 1.3:1.

Our TNC male connector PE45527 datasheet specifications and drawing with dimensions are shown below in this PDF. Pasternack's broad catalog of RF, microwave and millimeter wave connectors allows designers to configure and customize their signal connections however they like. Whether the need is to provide an I/O for a board design, or simply create a custom cable assembly configuration, Pasternack has the right connector for the job. Pasternack can also expertly build your custom cable assemblies for you and ship same-day.

### Electrical Specifications

| Description | Minimum | Typical | Maximum | Units |
|---|---|---|---|---|
| Frequency Range | DC | | 3 | GHz |
| VSWR | | | 1.3:1 | |
| Operating Voltage (AC) | | | 500 | Vrms |

### Mechanical Specifications

**Size**

| | |
|---|---|
| Length | 0.88 in [22.35 mm] |
| Width/Dia. | 0.571 in [14.50 mm] |

Click the following link (or enter part number in "SEARCH" on website) to obtain additional part information including price, inventory and certifications: TNC Male Connector Crimp/Crimp Attachment for RG174, RG316, RG188, LMR-100, PE-B100, PE-C100, .100 inch PE45527

Pasternack Enterprises, Inc. • P.O. Box 16759, Irvine, CA 92623
**Phone:** (866) 727-8376 or (949) 261-1920 • **Fax:** (949) 261-7451
Sales@Pasternack.com • Techsupport@Pasternack.com

© 2020 Pasternack Enterprises All Rights Reserved

# TNC Male Connector Crimp/Crimp Attachment for RG174, RG316, RG188, LMR-100, PE-B100, PE-C100, .100 inch



**Material Specifications**

| Description | Material | Plating |
|---|---|---|
| Contact | Brass | Gold<br>30 µin minimum |
| Insulation | PTFE | |
| Body | Brass | Nickel<br>100 µin minimum |
| Coupling Nut | Brass | Nickel<br>100 µin minimum |

## Environmental Specifications

**Temperature**

Operating Range -65 to +165 deg C

## Compliance Certifications (see product page for current document)

## Plotted and Other Data

Notes:

TNC Male Connector Crimp/Crimp Attachment for RG174, RG316, RG188, LMR-100, PE-B100, PE-C100, .100 inch from Pasternack Enterprises has same day shipment for domestic and International orders. Our RF, microwave and millimeter wave products maintain a 99.4% availability and are part of the broadest selection in the industry.

Click the following link (or enter part number in “SEARCH” on website) to obtain additional part information including price, inventory and certifications: TNC Male Connector Crimp/Crimp Attachment for RG174, RG316, RG188, LMR-100, PE-B100, PE-C100, .100 inch PE45527

URL: https://www.pasternack.com/tnc-male-rg174-rg316-lmr-100-pe-b100-pe-c100-connector-pe45527-p.aspx

The information contained in this document is accurate to the best of our knowledge and representative of the part described herein. It may be necessary to make modifications to the part and/or the documentation of the part, in order to implement improvements. Pasternack reserves the right to make such changes as required. Unless otherwise stated, all specifications are nominal. Pasternack does not make any representation or warranty regarding the suitability of the part described herein for any particular purpose, and Pasternack does not assume any liability arising out of the use of any part or documentation.

Pasternack Enterprises, Inc. • P.O. Box 16759, Irvine, CA 92623
**Phone:** (866) 727-8376 or (949) 261-1920 • **Fax:** (949) 261-7451
Sales@Pasternack.com • Techsupport@Pasternack.com

© 2020 Pasternack Enterprises All Rights Reserved

# PE45527 CAD Drawing

TNC Male Connector Crimp/Crimp Attachment for RG174, RG316, RG188, LMR-100, PE-B100, PE-C100, .100 inch

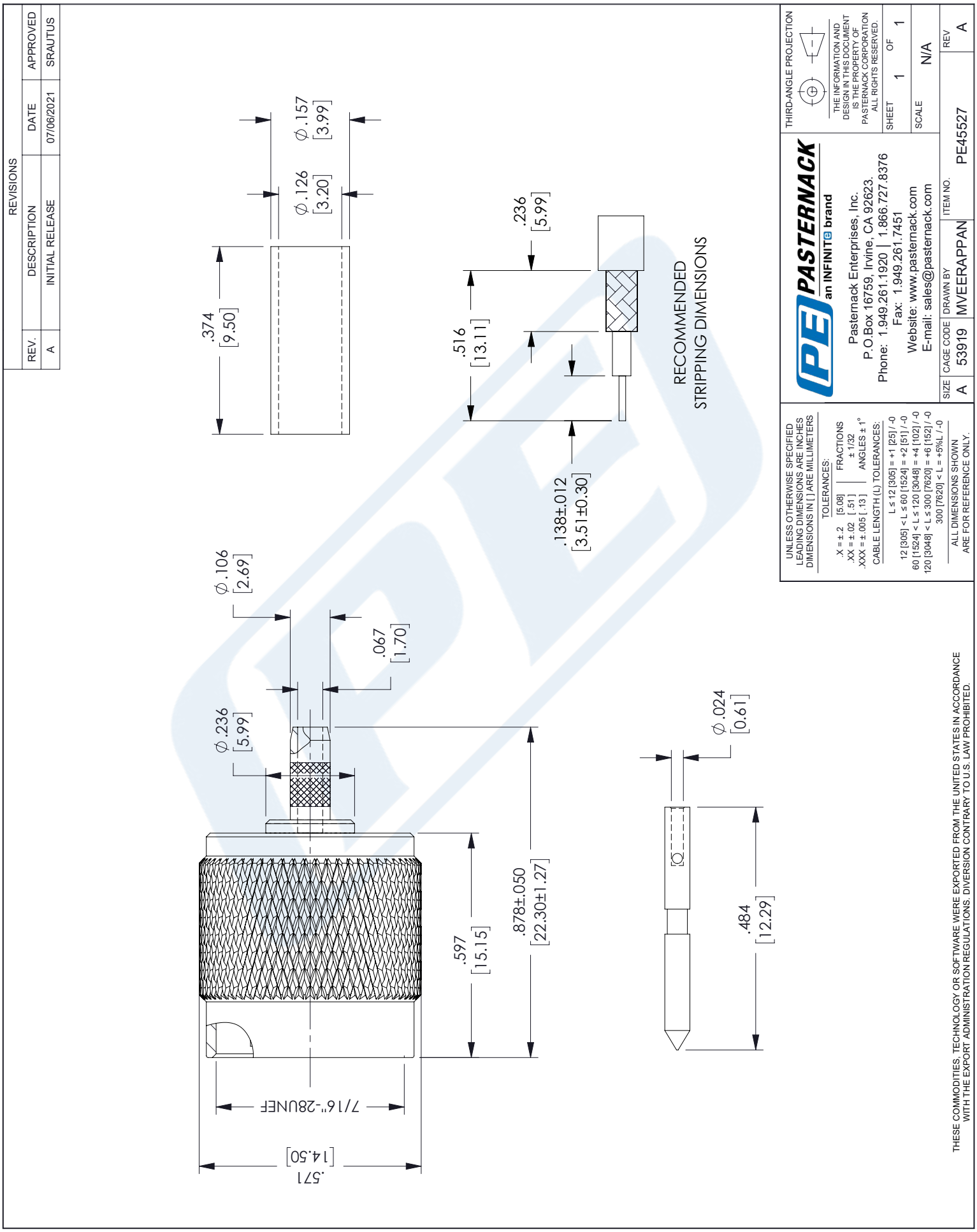

PASTERNACK®
THE ENGINEER'S RF SOURCE

# Low Loss Flexible RG174 Type Coax Cable Double Shielded with Black LSZH Jacket

RF Cables Technical Data Sheet PE-C100-LSZH

## Configuration

Low Loss Flexible Cable
2 Number of Shields

### Electrical Specifications

| Description | Minimum | Typical | Maximum | Units |
|---|---|---|---|---|
| Frequency Range | DC | | 5 | GHz |
| Cutoff Frequency | | 41 | | GHz |
| Impedance | | 50 | | Ohms |
| Velocity of Propagation | | 66 | | % |
| Shielding Effectiveness | 90 | | | dB |
| Operating Voltage (AC) | | | 500 | Vrms |
| Jacket Spark | | | 2,000 | Vrms |
| Nominal Capacitance | | 30.8 [101.05] | | pF/ft [pF/m] |
| Nominal Inductance | | 0.077 [0.25] | | uH/ft [uH/m] |

### Performance by Frequency Band

| Description | F1 | F2 | F3 | F4 | F5 | Units |
|---|---|---|---|---|---|---|
| Frequency | 30 | 50 | 150 | 220 | 450 | MHz |
| Attenuation, Typ | 3.9 | 5.1 | 8.9 | 10.9 | 15.8 | dB/100ft |
| | 12.8 | 16.73 | 29.2 | 35.76 | 51.84 | dB/100m |
| Input Power (CW), Max | 230 | 180 | 100 | 80 | 60 | Watts |

| Description | F6 | F7 | F8 | F9 | F10 | Units |
|---|---|---|---|---|---|---|
| Frequency | 0.7 | 1.5 | 1.8 | 2.5 | 5 | GHz |
| Attenuation, Typ | 20.1 | 30.5 | 33.5 | 40.5 | 60 | dB/100ft |
| | 65.94 | 100.07 | 109.91 | 132.87 | 196.85 | dB/100m |
| Input Power (CW), Max | 40 | 40 | 40 | 40 | 10 | Watts |

### Mechanical Specifications

| | |
|---|---|
| Diameter | 0.109 in [2.77 mm] |
| Weight | 0.014 lbs/ft [0.02 Kg/m] |

Click the following link (or enter part number in "SEARCH" on website) to obtain additional part information including price, inventory and certifications: Low Loss Flexible RG174 Type Coax Cable Double Shielded with Black LSZH Jacket PE-C100-LSZH

Pasternack Enterprises, Inc. • P.O. Box 16759, Irvine, CA 92623
**Phone:** (866) 727-8376 or (949) 261-1920 • **Fax:** (949) 261-7451
Sales@Pasternack.com • Techsupport@Pasternack.com

© 2015 Pasternack Enterprises All Rights Reserved

# Low Loss Flexible RG174 Type Coax Cable Double Shielded with Black LSZH Jacket



| | |
|---|---|
| Min. Bend Radius (Installation) | 0.25 in [6.35 mm] |
| Min. Bend Radius (Repeated) | 1 in [25.4 mm] |
| Bending Moment | 0.1 lbs/ft [0.15 Kg/m] |
| Tensile Strength | 15 lbs [6.8 Kg] |
| Flat Plate Crush | 10 lbs/in [0.18 Kg/mm] |

## Construction Specifications

| Description | Material and Plating | Diameter |
|---|---|---|
| Inner Conductor | Copper Clad Steel, 1 Strands | 0.018in [0.46 mm] |
| Dielectric | PE | 0.059 in [1.5 mm] |
| First Shield | Aluminum Tape | |
| Second Shield | Tinned Copper Braid | |
| Jacket | LSZH, Black | 0.109 in [2.77 mm] |

## Environmental Specifications

**Temperature**

| | |
|---|---|
| Operating Range | -40 to 85 deg C |
| Storage Range | -40 to 85 deg C |

## Compliance Certifications (visit www.Pasternack.com for current document)

| | |
|---|---|
| RoHS Compliant | |
| REACH Compliant | 12/17/2014 |

Click the following link (or enter part number in "SEARCH" on website) to obtain additional part information including price, inventory and certifications: Low Loss Flexible RG174 Type Coax Cable Double Shielded with Black LSZH Jacket PE-C100-LSZH

Pasternack Enterprises, Inc. • P.O. Box 16759, Irvine, CA 92623
**Phone:** (866) 727-8376 or (949) 261-1920 • **Fax:** (949) 261-7451
Sales@Pasternack.com • Techsupport@Pasternack.com

© 2015 Pasternack Enterprises All Rights Reserved

# Low Loss Flexible RG174 Type Coax Cable Double Shielded with Black LSZH Jacket



## Plotted and Other Data

Notes:

Low Loss Flexible RG174 Type Coax Cable Double Shielded with Black LSZH Jacket from Pasternack Enterprises has same day shipment for domestic and International orders. Our RF, microwave and millimeter wave products maintain a 99% availability and are part of the broadest selection in the industry.

Click the following link (or enter part number in "SEARCH" on website) to obtain additional part information including price, inventory and certifications: Low Loss Flexible RG174 Type Coax Cable Double Shielded with Black LSZH Jacket PE-C100-LSZH

URL: http://www.pasternack.com/50-ohm-low-loss-lszhjacket-aluminumtape-over-tinnedcopperbraid-outerconductor-double-shieldedpe-c100-lszh-p.aspx

The information contained in this document is accurate to the best of our knowledge and representative of the part described herein. It may be necessary to make modifications to the part and/or the documentation of the part, in order to implement improvements. Pasternack reserves the right to make such changes as required. Unless otherwise stated, all specifications are nominal. Pasternack does not make any representation or warranty regarding the suitability of the part described herein for any particular purpose, and Pasternack does not assume any liability arising out of the use of any part or documentation.

Pasternack Enterprises, Inc. • P.O. Box 16759, Irvine, CA 92623
**Phone:** (866) 727-8376 or (949) 261-1920 • **Fax:** (949) 261-7451
Sales@Pasternack.com • Techsupport@Pasternack.com

© 2015 Pasternack Enterprises All Rights Reserved

# PE-C100-LSZH CAD Drawing

Low Loss Flexible RG174 Type Coax Cable Double Shielded with Black LSZH Jacket

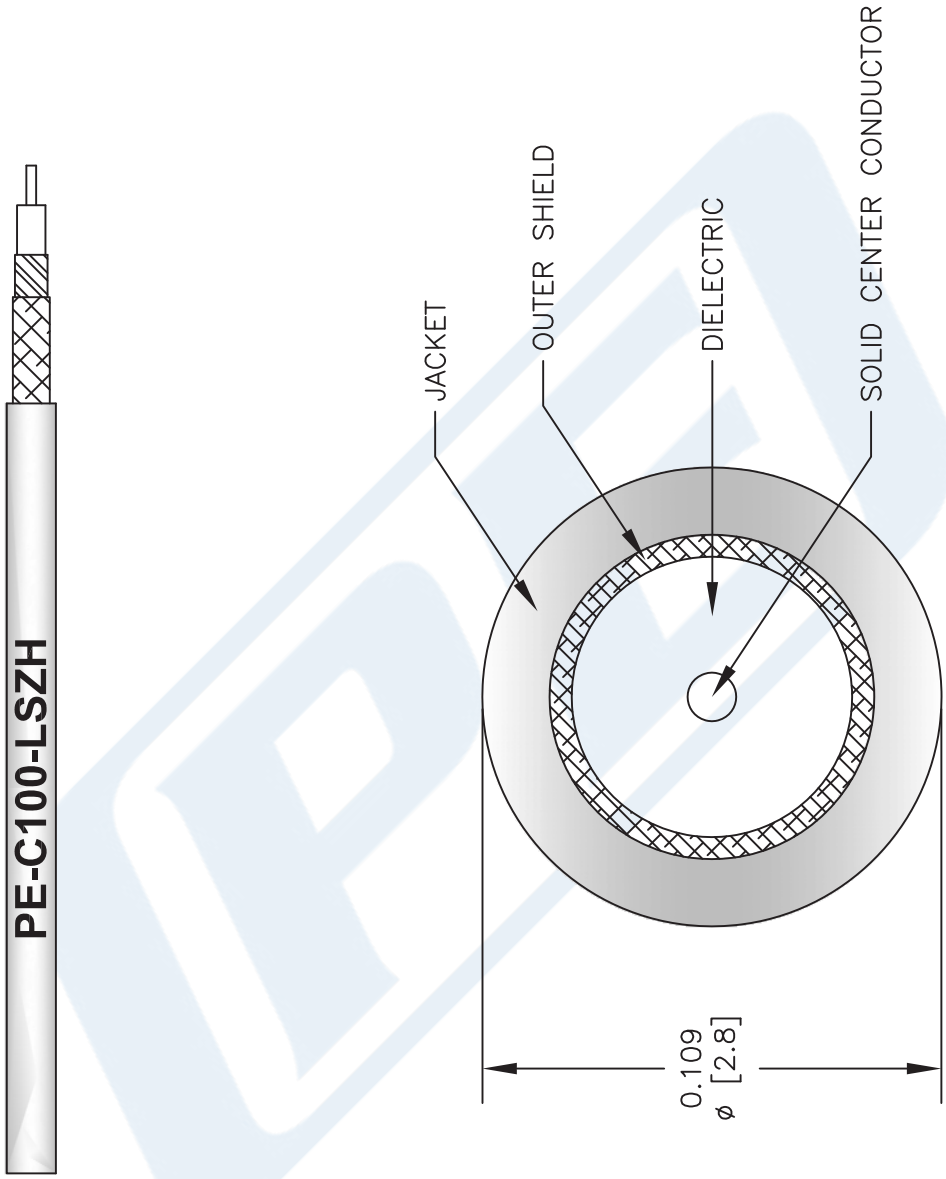


NOTES:
1. UNLESS OTHERWISE SPECIFIED ALL DIMENSIONS ARE NOMINAL.
2. ALL SPECIFICATIONS ARE SUBJECT TO CHANGE WITHOUT NOTICE AT ANY TIME.
3. DIMENSIONS ARE IN INCHES [mm].

DWG TITLE
PE-C100-LSZH

FSCM NO. 53919

CAD FILE 031313 | SCALE N/A | SIZE A | 2233

PASTERNACK®
Pasternack Enterprises, Inc.
P.O. Box 16759 | Irvine | CA | 92623
**Phone:** (949) 261-1920 | **Fax:** (949) 261-7451
**Website:** www.pasternack.com | **E-Mail:** sales@pasternack.com

© 2015 Pasternack Enterprises All Rights Reserved