PASTERNACK
an INFINITE brand

N Female Bulkhead Mount Connector Crimp/Solder Attachment for RG214, RG9, RG225, RG393, .640 inch DD Hole

RF Connectors
Technical Data Sheet

PE4941

Configuration

- N Female Connector
- MIL-STD-348A
- 50 Ohms
- Straight Body Geometry
- Connector Interface Types: RG214, RG9, RG225, RG393
- Bulkhead

Features

- Max. Operating Frequency 11 GHz
- Good VSWR of 1.35:1
- Gold Plated Brass Contact
- 30 µin minimum contact plating

Applications

- General Purpose Test
- Rack and Panel Mount Applications
- Custom Cable Assemblies

Description

Pasternack's PE4941 type N female bulkhead connector with crimp/solder attachment for RG214, RG9, RG225 and RG393 (.640 inch DD hole) is part of our full line of RF components available for same-day shipping. Our type N female connector operates up to a maximum frequency of 11 GHz and offers good VSWR of 1.35:1. This type N bulkhead connector allows designers to create external connections on their product enclosures, and can be used in a variety of other rack mount and panel mount applications.

Our type N female bulkhead connector PE4941 datasheet specifications and drawing with dimensions are shown below in this PDF. Pasternack's broad catalog of RF, microwave and millimeter wave connectors allows designers to configure and customize their signal connections however they like. Whether the need is to provide an I/O for a board design, or simply create a custom cable assembly configuration, Pasternack has the right connector for the job. Pasternack can also expertly build your custom cable assemblies for you and ship same-day.

Electrical Specifications

Description	Minimum	Typical	Maximum	Units
Frequency Range	DC		11	GHz
VSWR			1.35:1	
Operating Voltage (AC)			1,000	Vrms

Mechanical Specifications

Size

Length	1.88 in [47.75 mm]
Width/Dia.	0.815 in [20.70 mm]
Weight	0.095 lbs [43.09 g]

Click the following link (or enter part number in "SEARCH" on website) to obtain additional part information including price, inventory and certifications: N Female Bulkhead Mount Connector Crimp/Solder Attachment for RG214, RG9, RG225, RG393, .640 inch DD Hole PE4941

Pasternack Enterprises, Inc. • P.O. Box 16759, Irvine, CA 92623
Phone: (866) 727-8376 or (949) 261-1920 • **Fax:** (949) 261-7451
Sales@Pasternack.com • Techsupport@Pasternack.com

© 2020 Pasternack Enterprises All Rights Reserved

N Female Bulkhead Mount Connector Crimp/Solder Attachment for RG214, RG9, RG225, RG393, .640 inch DD Hole

Material Specifications

Description	Material	Plating
Contact	Brass	Gold 30 µin minimum
Insulation	PTFE	
Body	Brass	Nickel 100 µin minimum

Environmental Specifications

Temperature

Operating Range -65 to +165 deg C

Compliance Certifications (see product page for current document)

Plotted and Other Data

Notes:

N Female Bulkhead Mount Connector Crimp/Solder Attachment for RG214, RG9, RG225, RG393, .640 inch DD Hole from Pasternack Enterprises has same day shipment for domestic and International orders. Our RF, microwave and millimeter wave products maintain a 99.4% availability and are part of the broadest selection in the industry.

Click the following link (or enter part number in “SEARCH” on website) to obtain additional part information including price, inventory and certifications: N Female Bulkhead Mount Connector Crimp/Solder Attachment for RG214, RG9, RG225, RG393, .640 inch DD Hole PE4941

URL: https://www.pasternack.com/n-female-standard-rg214-rg9-rg225-rg393-connector-pe4941-p.aspx

The information contained in this document is accurate to the best of our knowledge and representative of the part described herein. It may be necessary to make modifications to the part and/or the documentation of the part, in order to implement improvements. Pasternack reserves the right to make such changes as required. Unless otherwise stated, all specifications are nominal. Pasternack does not make any representation or warranty regarding the suitability of the part described herein for any particular purpose, and Pasternack does not assume any liability arising out of the use of any part or documentation.

Pasternack Enterprises, Inc. • P.O. Box 16759, Irvine, CA 92623
Phone: (866) 727-8376 or (949) 261-1920 • **Fax:** (949) 261-7451
Sales@Pasternack.com • Techsupport@Pasternack.com

© 2020 Pasternack Enterprises All Rights Reserved

PE4941 CAD Drawing

N Female Bulkhead Mount Connector Crimp/Solder Attachment
for RG214, RG9, RG225, RG393, .640 inch DD Hole

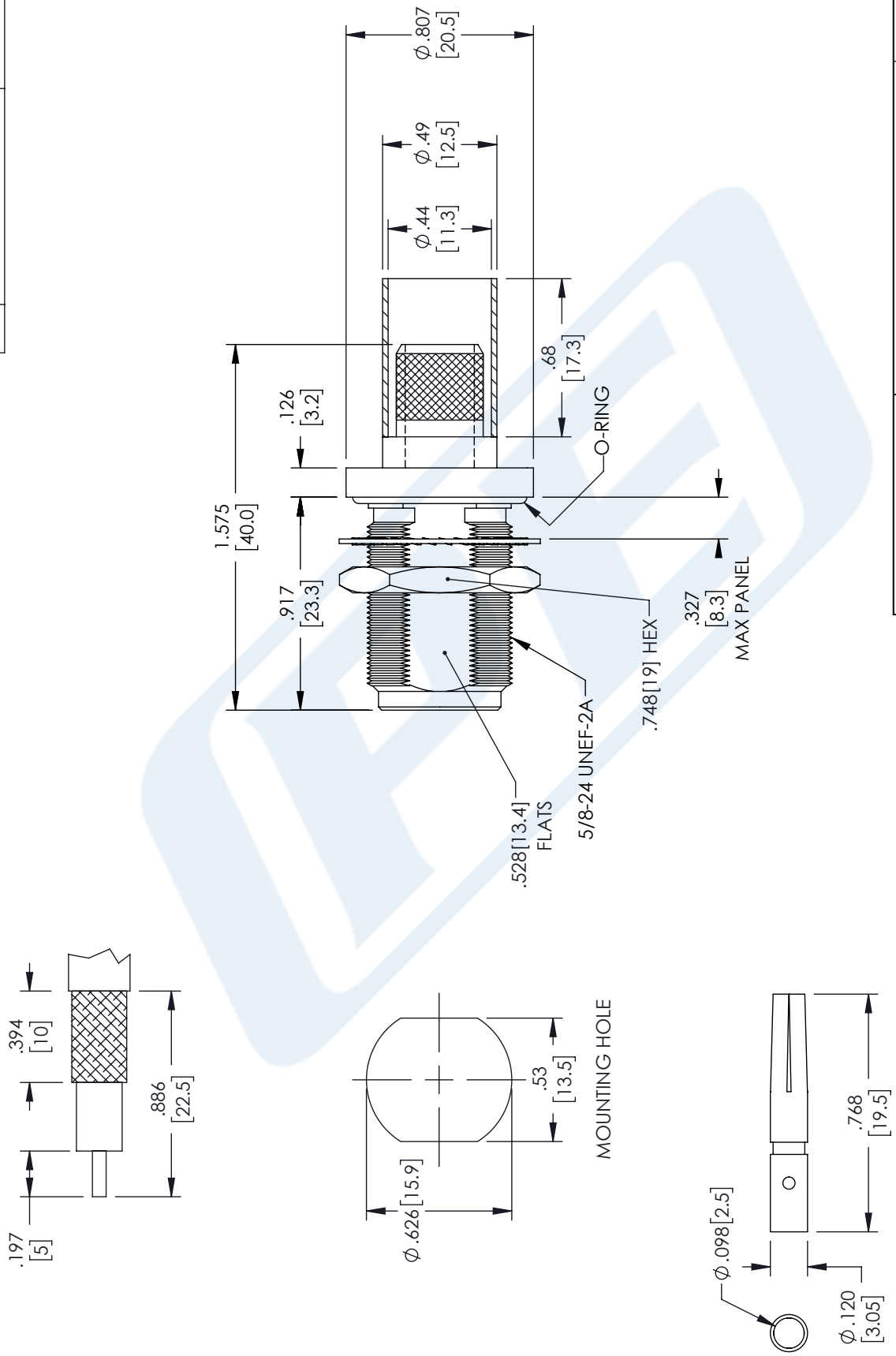

REVISIONS			
REV.	DESCRIPTION	DATE	APPROVED
B	PCR PE4941 20220627	07/06/2022	SRAUTUS

THIRD-ANGLE PROJECTION

THE INFORMATION AND DESIGN IN THIS DOCUMENT IS THE PROPERTY OF PASTERNACK CORPORATION ALL RIGHTS RESERVED.

PASTERNACK an INFINITE brand
Pasternack Enterprises, Inc.
P.O.Box 16759, Irvine, CA 92623.
Phone: 1.949.261.1920 | 1.866.727.8376
Fax: 1.949.261.7451
Website: www.pasternack.com
E-mail: sales@pasternack.com

UNLESS OTHERWISE SPECIFIED LEADING DIMENSIONS ARE INCHES DIMENSIONS IN [ ] ARE MILLIMETERS

TOLERANCES:
.X = ± .2 [5.08] | FRACTIONS ± 1/32
.XX = ± .02 [.51] | ANGLES ± 1°
.XXX = ± .005 [.13]

CABLE LENGTH (L) TOLERANCES:
L ≤ 12 [305] = +1 [25] / -0
12 [305] < L ≤ 60 [1524] = +2 [51] / -0
60 [1524] < L ≤ 120 [3048] = +4 [102] / -0
120 [3048] < L ≤ 300 [7620] = +6 [152] / -0
300 [7620] < L = +5%L / -0

ALL DIMENSIONS SHOWN ARE FOR REFERENCE ONLY.

SIZE	CAGE CODE	DRAWN BY	ITEM NO.	REV
A	53919	BZHANG	PE4941	B

SHEET 1 OF 1
SCALE N/A

THESE COMMODITIES, TECHNOLOGY OR SOFTWARE WERE EXPORTED FROM THE UNITED STATES IN ACCORDANCE WITH THE EXPORT ADMINISTRATION REGULATIONS. DIVERSION CONTRARY TO U.S. LAW PROHIBITED.

T-Rev.D

PASTERNACK
an INFINITE brand

C Male Connector Clamp/Solder Attachment for RG213, RG214, RG8, RG9, RG11, RG225, RG393, RG144, RG216, RG215

RF Connectors
Technical Data Sheet

PE4243

Configuration

- C Male Connector
- MIL-STD-348A
- 50 Ohms
- Straight Body Geometry
- Connector Interface Types: RG213, RG214, RG8, RG9, RG11, RG225, RG393, RG144, RG216, RG215

Features

- Max. Operating Frequency 6 GHz
- Good VSWR of 1.3:1
- Gold Plated Brass Contact
- 30 µin minimum contact plating

Applications

- General Purpose Test
- Custom Cable Assemblies

Description

Pasternack's PE4243 type C male connector with clamp/solder attachment for RG213, RG214, RG8, RG9, RG11, RG225, RG393, RG144, RG216 and RG215 is part of our full line of RF components available for same-day shipping. Our type C male connector operates up to a maximum frequency of 6 GHz and offers good VSWR of 1.3:1.

Our type C male connector PE4243 datasheet specifications and drawing with dimensions are shown below in this PDF. Pasternack's broad catalog of RF, microwave and millimeter wave connectors allows designers to configure and customize their signal connections however they like. Whether the need is to provide an I/O for a board design, or simply create a custom cable assembly configuration, Pasternack has the right connector for the job. Pasternack can also expertly build your custom cable assemblies for you and ship same-day.

Electrical Specifications

Description	Minimum	Typical	Maximum	Units
Frequency Range	DC		6	GHz
VSWR			1.3:1	
Operating Voltage (AC)			1,000	Vrms

Mechanical Specifications

Size	
Length	1.5 in [38.1 mm]
Width/Dia.	0.75 in [19.05 mm]
Weight	0.106 lbs [48.08 g]

Click the following link (or enter part number in "SEARCH" on website) to obtain additional part information including price, inventory and certifications: C Male Connector Clamp/Solder Attachment for RG213, RG214, RG8, RG9, RG11, RG225, RG393, RG144, RG216, RG215 PE4243

Pasternack Enterprises, Inc. • P.O. Box 16759, Irvine, CA 92623
Phone: (866) 727-8376 or (949) 261-1920 • **Fax:** (949) 261-7451
Sales@Pasternack.com • Techsupport@Pasternack.com

© 2020 Pasternack Enterprises All Rights Reserved

C Male Connector Clamp/Solder Attachment for RG213, RG214, RG8, RG9, RG11, RG225, RG393, RG144, RG216, RG215

Material Specifications

Description	Material	Plating
Contact	Brass	Gold 30 µin minimum
Insulation	PTFE	
Body	Brass	Nickel 100 µin minimum
Coupling Nut	Brass	Nickel 100 µin minimum

Mechanical Specification Notes:
When attaching the connector to the cable use a clamp torque value of 60 to 65 in-lbs [6.78 to 7.34 Nm]

Environmental Specifications

Temperature

Operating Range -65 to +165 deg C

Compliance Certifications (see product page for current document)

Plotted and Other Data

Notes:

C Male Connector Clamp/Solder Attachment for RG213, RG214, RG8, RG9, RG11, RG225, RG393, RG144, RG216, RG215 from Pasternack Enterprises has same day shipment for domestic and International orders. Our RF, microwave and millimeter wave products maintain a 99.4% availability and are part of the broadest selection in the industry.

Click the following link (or enter part number in “SEARCH” on website) to obtain additional part information including price, inventory and certifications: C Male Connector Clamp/Solder Attachment for RG213, RG214, RG8, RG9, RG11, RG225, RG393, RG144, RG216, RG215 PE4243

URL: https://www.pasternack.com/c-male-standard-rg213-rg214-rg8-rg9-rg11-rg225-rg393-connector-pe4243-p.aspx

The information contained in this document is accurate to the best of our knowledge and representative of the part described herein. It may be necessary to make modifications to the part and/or the documentation of the part, in order to implement improvements. Pasternack reserves the right to make such changes as required. Unless otherwise stated, all specifications are nominal. Pasternack does not make any representation or warranty regarding the suitability of the part described herein for any particular purpose, and Pasternack does not assume any liability arising out of the use of any part or documentation.

Pasternack Enterprises, Inc. • P.O. Box 16759, Irvine, CA 92623
Phone: (866) 727-8376 or (949) 261-1920 • **Fax:** (949) 261-7451
Sales@Pasternack.com • Techsupport@Pasternack.com

© 2020 Pasternack Enterprises All Rights Reserved

PE4243 CAD Drawing

C Male Connector Clamp/Solder Attachment for RG213, RG214, RG8, RG9, RG11, RG225, RG393, RG144, RG216, RG215

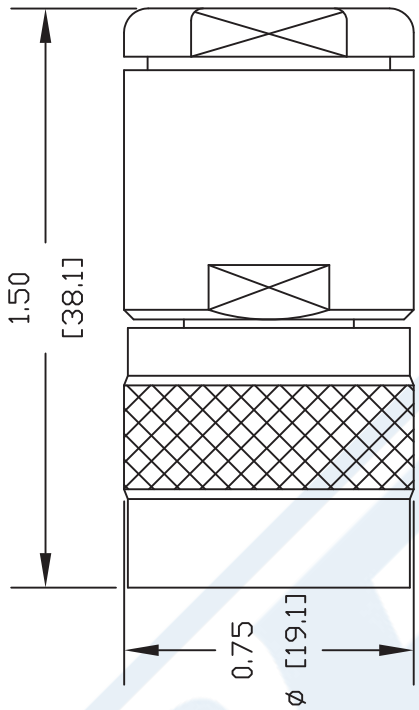

ASSEMBLY PROCEDURES

1. SLIDE CLAMP NUT (1) & GASKET (2) OVER CABLE. STRIP CABLE AS SHOWN. DO NOT NICK BRAID WHILE CUTTING JACKET. TAPER END OF BRAID TO PERMIT ASSEMBLY OF BRAID CLAMP (3) SLIDE BRAID CLAMP(3) OVER BRAID & SEAT AGAINST CABLE.

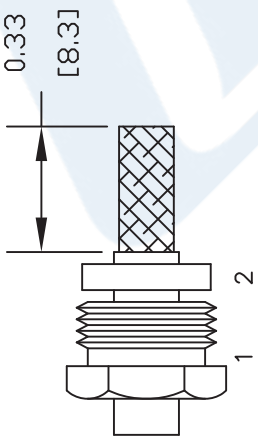

2. FORM BRAID OVER CLAMP NUT (3). TRIM BRAID BACK TO SHOULDER. CUT DIELECTRIC TO DIMENSION SHOWN. DO NOT NICK CENTER CONDUCTOR. SOLDER CONTACT TO CENTER CONDUCTOR. REMOVE EXCESS SOLDER. DO NOT OVER HEAT DIELECTRIC. INSERT CABLE ASSEMBLY INTO BODY & TIGHTEN.

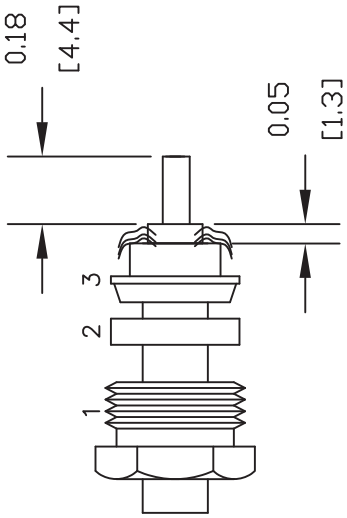

NOTES:
1. UNLESS OTHERWISE SPECIFIED ALL DIMENSIONS ARE NOMINAL.
2. ALL SPECIFICATIONS ARE SUBJECT TO CHANGE WITHOUT NOTICE AT ANY TIME.
3. DIMENSIONS ARE IN INCHES [mm].
4. FITS MIL-C-17 AND EQUIVALENT CABLES.

DWG TITLE **PE4243**

REV. - | FSCM NO. 53919 | CAD FILE 042309 | SCALE N/A | SIZE A | 147

PASTERNACK®
Pasternack Enterprises, Inc.
P.O. Box 16759 | Irvine | CA | 92623
Phone: (949) 261-1920 | **Fax:** (949) 261-7451
Website: www.pasternack.com | **E-Mail:** sales@pasternack.com

© 2020 Pasternack Enterprises All Rights Reserved

PASTERNACK®
THE ENGINEER'S RF SOURCE

Flexible RG214 Coax Cable Double Shielded with Black PVC Jacket

RF Cables
Technical Data Sheet

RG214/U

Configuration

- Flexible Cable
- 2 Shield(s)

Electrical Specifications

Description	Minimum	Typical	Maximum	Units
Frequency Range	DC		11	GHz
Impedance		50		Ohms
Velocity of Propagation		66		%
Operating Voltage (AC)			5,000	Vrms
Nominal Capacitance		30.8 [101.05]		pF/ft [pF/m]

Performance by Frequency Band

Description	F1	F2	F3	F4	F5	Units
Frequency	0.01	0.1	1	5	10	GHz
Attenuation, Typ	0.64	2.07	7.68	20.68	36.51	dB/100ft
	2.1	6.79	25.2	67.85	119.78	dB/100m

Mechanical Specifications

Diameter	0.425 in [10.8 mm]
Weight	0.122 lbs/ft [0.18 Kg/m]
Min. Bend Radius (Repeated)	1.6 in [40.64 mm]

Construction Specifications

Description	Material and Plating	Diameter
Inner Conductor	Copper, Silver, 7 Strands (7 X 0.02961)	0.089 in [2.26 mm]
Conductor Type	Stranded	
Dielectric	PE	0.285 in [7.24 mm]
First Shield	Silver Plated Copper Braid	

Click the following link (or enter part number in "SEARCH" on website) to obtain additional part information including price, inventory and certifications: Flexible RG214 Coax Cable Double Shielded with Black PVC Jacket RG214/U

Pasternack Enterprises, Inc. • P.O. Box 16759, Irvine, CA 92623
Phone: (866) 727-8376 or (949) 261-1920 • **Fax:** (949) 261-7451
Sales@Pasternack.com • Techsupport@Pasternack.com

© 2018 Pasternack Enterprises All Rights Reserved

Flexible RG214 Coax Cable Double Shielded with Black PVC Jacket

	90% coverage	
Second Shield	Silver Plated Copper Braid 90% coverage	0.331 in [8.41 mm]
Jacket	PVC, Black	0.425 in [10.8 mm]

Environmental Specifications

Temperature

Operating Range -20 to +80 deg C

Compliance Certifications (see product page for current document)

Plotted and Other Data

Notes:

Flexible RG214 Coax Cable Double Shielded with Black PVC Jacket from Pasternack Enterprises has same day shipment for domestic and International orders. Our RF, microwave and millimeter wave products maintain a 99.4% availability and are part of the broadest selection in the industry.

Click the following link (or enter part number in "SEARCH" on website) to obtain additional part information including price, inventory and certifications: Flexible RG214 Coax Cable Double Shielded with Black PVC Jacket RG214/U

URL: https://www.pasternack.com/flexible-0.425-rg214-50-ohm-coax-cable-pvc-jacket-rg214-u-p.aspx

The information contained in this document is accurate to the best of our knowledge and representative of the part described herein. It may be necessary to make modifications to the part and/or the documentation of the part, in order to implement improvements. Pasternack reserves the right to make such changes as required. Unless otherwise stated, all specifications are nominal. Pasternack does not make any representation or warranty regarding the suitability of the part described herein for any particular purpose, and Pasternack does not assume any liability arising out of the use of any part or documentation.

Pasternack Enterprises, Inc. • P.O. Box 16759, Irvine, CA 92623
Phone: (866) 727-8376 or (949) 261-1920 • **Fax:** (949) 261-7451
Sales@Pasternack.com • Techsupport@Pasternack.com

© 2018 Pasternack Enterprises All Rights Reserved

RG214/U CAD Drawing

Flexible RG214 Coax Cable Double Shielded with Black PVC Jacket

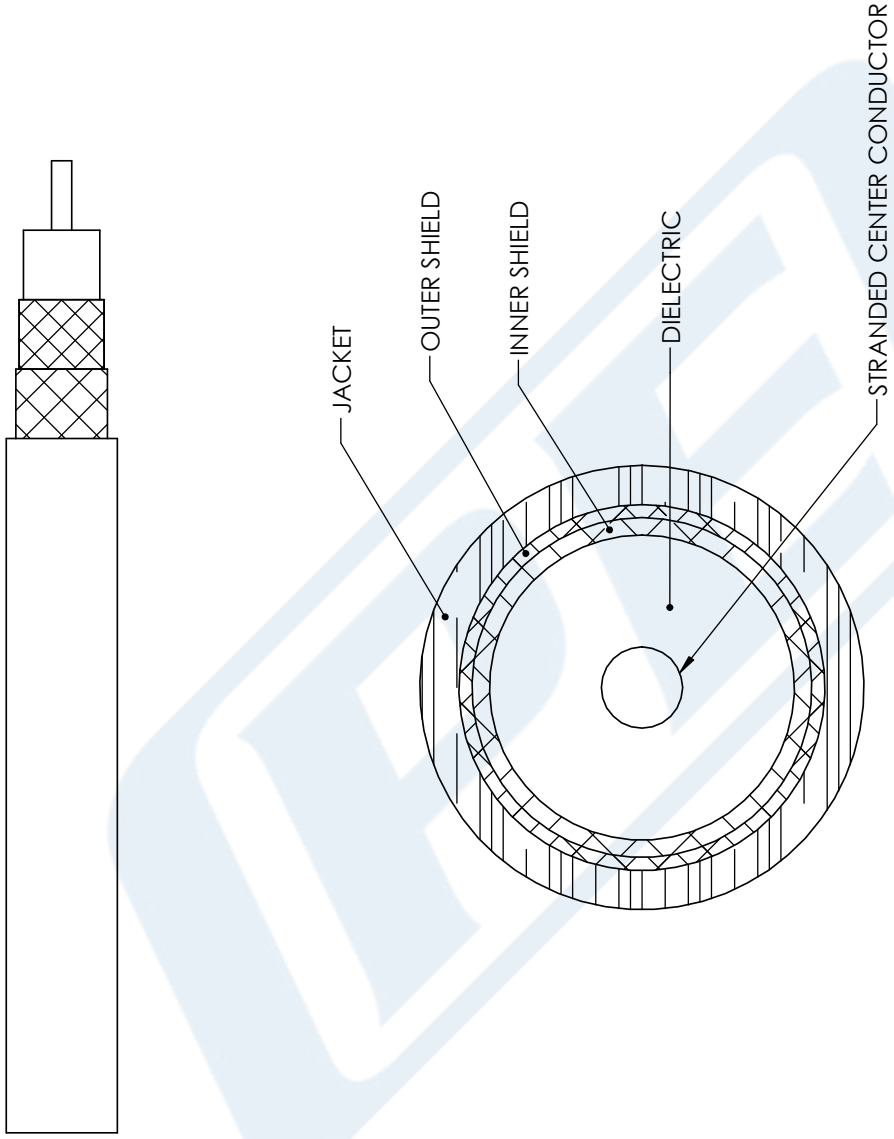

STANDARD TOLERANCES	
.X	±0.2
.XX	±0.01
.XXX	±0.005

*STANDARD TOLERANCES APPLY ONLY TO DIMENSIONS IN INCHES

NOTES:
1. UNLESS OTHERWISE SPECIFIED ALL DIMENSIONS ARE NOMINAL.
2. ALL SPECIFICATIONS ARE SUBJECT TO CHANGE WITHOUT NOTICE AT ANY TIME
3. DIMENSIONS ARE IN INCHES [mm].

DWG TITLE: RG214-U

CAD FILE: 11/29/17

SCALE: N/A

SIZE: A

CN2245

CAGE CODE 53919

PASTERNACK®
THE ENGINEER'S RF SOURCE
Pasternack Enterprises, Inc.
P.O. Box 16759 | Irvine | CA | 92623
Phone: (949) 261-1920 | **Fax:** (949) 261-7451
Website: www.pasternack.com | **E-Mail:** sales@pasternack.com

© 2018 Pasternack Enterprises All Rights Reserved