MATERIALS	
BODY	BRASS NICKEL PLATED
CONTACT	GOLD PLATED
INSULATOR	PTFE

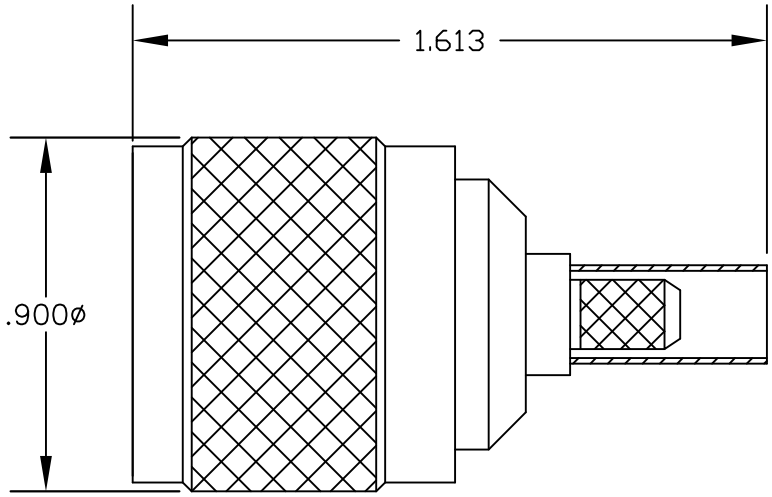

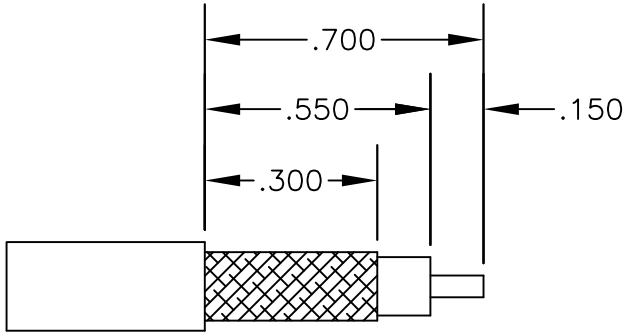

STRIPPING DIMENSIONS

CRIMP SIZES REQUIRED

CONTACT: .100" HEX CRIMP TOOL

FERRULE: .213" HEX CRIMP TOOL

PASTERNACK ENTERPRISES®
ESTABLISHED 1972

PASTERNACK ENTERPRISES, INC.
P.O BOX 16759, IRVINE, CA 92623
PHONE (949) 261-1920 FAX (949) 261-7451

WEB ADDRESS: www.pasternack.com
E-MAIL ADDRESS: sales@pasternack.com

COAXIAL & FIBER OPTICS

DWG TITLE	DES.			
PE4478	HN MALE, CRIMP ATTACHMENT FOR RG58			
SIZE A	FSCM NO. 53919	CAD FILE 051602	SCALE N/A	127

NOTES:
1. UNLESS OTHERWISE SPECIFIED ALL DIMENSIONS ARE NOMINAL.
2. ALL SPECIFICATIONS ARE SUBJECT TO CHANGE WITHOUT NOTICE AT ANY TIME.

N Female Bulkhead Mount Connector Crimp/Solder Attachment for PE-C195, PE-P195, RG58, RG141, RG303, LMR-195, 0.195 inch, .640 inch DD Hole

RF Connectors Technical Data Sheet PE44528

Configuration

- N Female Connector
- 50 Ohms
- Straight Body Geometry
- PE-C195, PE-P195, RG58, RG141, RG303, LMR-195, 0.195 inch Interface Type
- Crimp/Solder Attachment
- Bulkhead

Features

- Max. Operating Frequency 11 GHz
- Gold Plated Phosphor Bronze Contact

Applications

- General Purpose Test
- Rack and Panel Mount Applications
- Custom Cable Assemblies

Description

Pasternack's PE44528 type N female bulkhead connector with crimp/solder attachment for PE-C195, PE-P195, RG58, RG141, RG303, LMR-195 and 0.195 inch (.640 inch DD hole) is part of our full line of RF components available for same-day shipping. Our type N female connector operates up to a maximum frequency of 11 GHz. This type N bulkhead connector allows designers to create external connections on their product enclosures, and can be used in a variety of other rack mount and panel mount applications.

Our type N female bulkhead connector PE44528 datasheet specifications and drawing with dimensions are shown below in this PDF. Pasternack's broad catalog of RF, microwave and millimeter wave connectors allows designers to configure and customize their signal connections however they like. Whether the need is to provide an I/O for a board design, or simply create a custom cable assembly configuration, Pasternack has the right connector for the job. Pasternack can also expertly build your custom cable assemblies for you and ship same-day.

Electrical Specifications

Description	Minimum	Typical	Maximum	Units
Frequency Range	DC		11	GHz

Mechanical Specifications

Size

Length	1.61 in [40.89 mm]
Width/Dia.	0.87 in [22.10 mm]
Weight	0.11 lbs [49.9 g]

Click the following link (or enter part number in "SEARCH" on website) to obtain additional part information including price, inventory and certifications: N Female Bulkhead Mount Connector Crimp/Solder Attachment for PE-C195, PE-P195, RG58, RG141, RG303, LMR-195, 0.195 inch, .640 inch DD Hole PE44528

Pasternack Enterprises, Inc. • P.O. Box 16759, Irvine, CA 92623
Phone: (866) 727-8376 or (949) 261-1920 • **Fax:** (949) 261-7451
Sales@Pasternack.com • Techsupport@Pasternack.com

© 2016 Pasternack Enterprises All Rights Reserved

N Female Bulkhead Mount Connector Crimp/Solder Attachment for PE-C195, PE-P195, RG58, RG141, RG303, LMR-195, 0.195 inch, .640 inch DD Hole

Material Specifications

Description	Material	Plating
Contact	Phosphor Bronze	Gold
Insulation	PTFE	
Body	Brass	Tri-Metal

Environmental Specifications

Temperature

Operating Range -65 to +165 deg C

Compliance Certifications (see product page for current document)

Plotted and Other Data

Notes:

N Female Bulkhead Mount Connector Crimp/Solder Attachment for PE-C195, PE-P195, RG58, RG141, RG303, LMR-195, 0.195 inch, .640 inch DD Hole from Pasternack Enterprises has same day shipment for domestic and International orders. Our RF, microwave and millimeter wave products maintain a 99% availability and are part of the broadest selection in the industry.

Click the following link (or enter part number in "SEARCH" on website) to obtain additional part information including price, inventory and certifications: N Female Bulkhead Mount Connector Crimp/Solder Attachment for PE-C195, PE-P195, RG58, RG141, RG303, LMR-195, 0.195 inch, .640 inch DD Hole PE44528

URL: https://www.pasternack.com/n-female-standard-pe-c195-0.195-connector-pe44528-p.aspx

The information contained in this document is accurate to the best of our knowledge and representative of the part described herein. It may be necessary to make modifications to the part and/or the documentation of the part, in order to implement improvements. Pasternack reserves the right to make such changes as required. Unless otherwise stated, all specifications are nominal. Pasternack does not make any representation or warranty regarding the suitability of the part described herein for any particular purpose, and Pasternack does not assume any liability arising out of the use of any part or documentation.

Pasternack Enterprises, Inc. • P.O. Box 16759, Irvine, CA 92623
Phone: (866) 727-8376 or (949) 261-1920 • **Fax:** (949) 261-7451
Sales@Pasternack.com • Techsupport@Pasternack.com

© 2016 Pasternack Enterprises All Rights Reserved

PE44528 CAD Drawing

N Female Bulkhead Mount Connector Crimp/Solder Attachment for PE-C195, PE-P195, RG58, RG141, RG303, LMR-195, 0.195 inch, .640 inch DD Hole

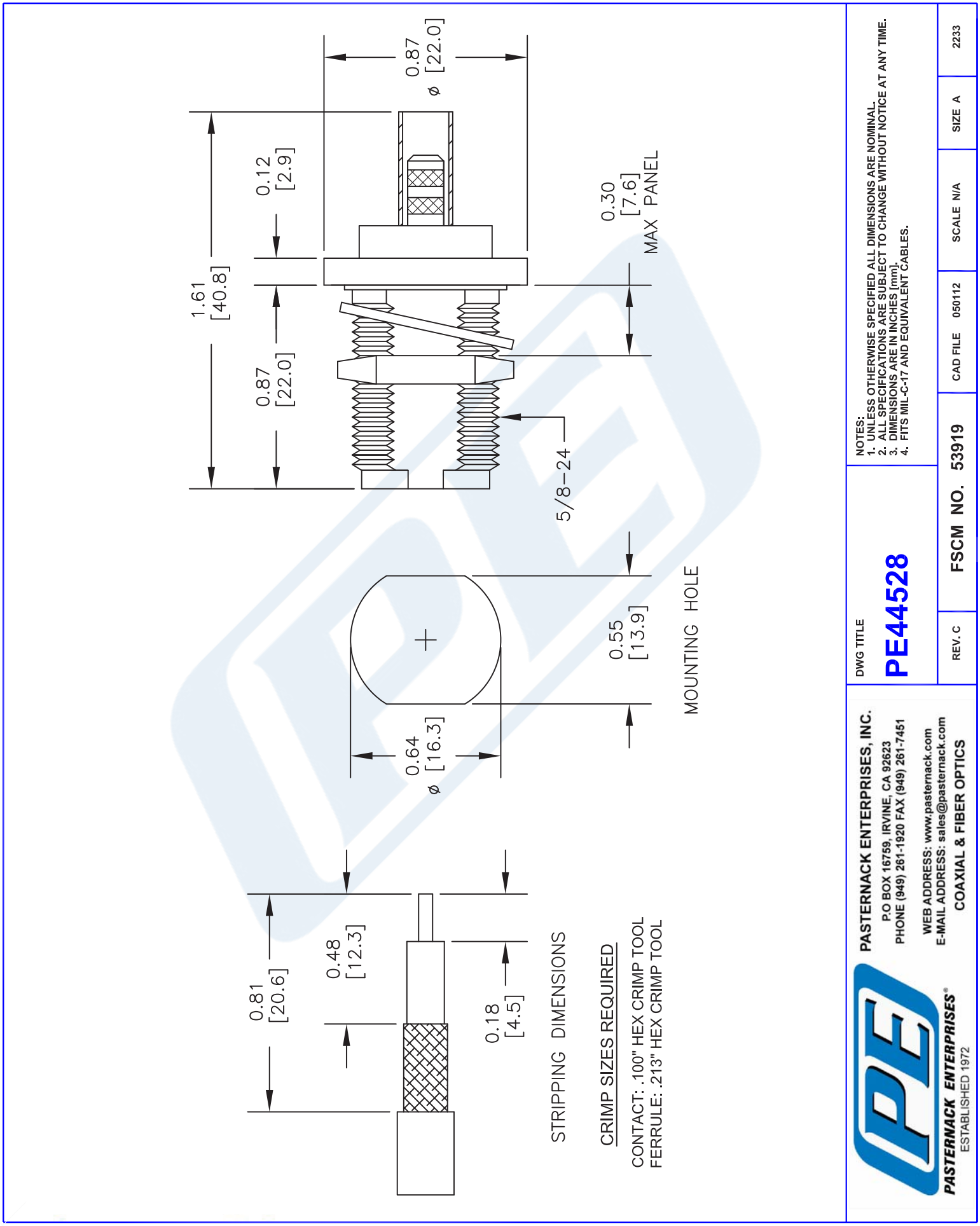

© 2016 Pasternack Enterprises All Rights Reserved

40kV Flexible RG303 High Voltage Coax Cable Single Shielded with Red PUR Jacket

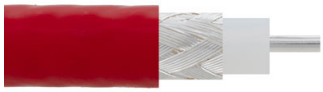

RG303HV

Configuration

- Flexible Cable
- 1 Shield(s)

Features

- Voltage rating up to 40kV
- Low Signal Attenuation
- Robust Insulation
- Flexible and Durable

Applications

- Semiconductor Testing
- Radar Systems
- Broadcast Stations
- Research and Development
- Military and Defense

Description

RG303HV part number from Pasternack is a coax cable that is flexible. Pasternack's flexible coax RF cable has an im-pedance of 50 Ohm and PE dielectric. Our RG303HV coax cable is constructed with a 0.169-inch jacket made of FEP. Our coax cable from Pasternack has a maximum frequency of 3000 MHz. This red colored coax cable has a 0.138-inch shield layer of Silver Copper. Additional specifications for this RG303HV single-shielded RF coaxial cable are on our downloadable PDF datasheet above. Our RG303HV coax cable has a maximum operating temperature of 70 degrees C. This 40kV red colored flexible RF cable with a 50 Ohm impedance has a typical insertion loss/ maximum attenuation of 0.22 dB/ft at a frequency of 3000 MHz. The RG303HV flexible RF cable has a silver center conductor with a copper clad aluminum conductor plating.

The RG303 high-voltage RF cable is engineered specifically for radio frequency applications that require the handling of extremely high voltages. With a rated voltage of 40kV, this cable is designed to safely and efficiently transmit high-voltage RF signals. It is commonly utilized in industrial applications where reliable and robust RF signal distribution is critical. The RG303 cable is constructed with high-quality insulation materials and conductors to minimize signal loss and ensure optimal performance. Adhering to safety guidelines and proper installation practices are essential when working with this cable to maintain electrical safety and preserve signal integrity. Pasternack RG303HV coax cables are part of over 40,000 RF, microwave, and millimeter wave components. These flexible RF cables and our other RF parts are available for same-day shipping worldwide. Custom RF cable assemblies using RG303HV other coax can be built and shipped the same business day as well.

Electrical Specifications

Description	Minimum	Typical	Maximum	Units
Frequency Range	DC		3	GHz
Impedance		50		Ohms
Operating Voltage (DC)			40,000	Vdc
Nominal Capacitance		28.65 [94]		pF/ft [pF/m]
Test Voltage (Conductor/Braid)		80		kVoc/1min
Test Voltage (Spark Test, Core)		15		kVac
Test Voltage (Spark Test, Jacket)		5		kVac

© 2023 Infinite Electronics, Inc. Pasternack is a registered trademark of Infinite Electronics, Inc.
+1 (866) 558-2786 | sales@pasternack.com | pasternack.com

40kV Flexible RG303 High Voltage Coax Cable Single Shielded with Red PUR Jacket

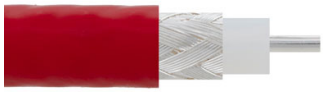

RG303HV

Electrical Specifications

Description	Minimum	Typical	Maximum	Units
Test Voltage (Type Test)		64		kVoc

Performance by Frequency Band

Description	F1	F2	F3	F4	F5	Units
Frequency	0.05	0.4	1	3		GHz
Attenuation, Typ	2.48	7.35	12.09	22.52		dB/100ft
	8.14	24.11	39.67	73.88		dB/100m

Mechanical Specifications

Diameter	0.169 in [4.29 mm}
Weight	0.027 lbs/ft [0.04 kg/m]
Min. Bend Radius (Installation)	0.787 in [19.99 mm]
Min. Bend Radius (Repeated)	1.77 in [44.96 mm]

Construction Specifications

Description	Material and Plating	Diameter
Inner Conductor	Silver, Copper Clad Aluminum, Strand	0.037 in [0.94 mm]
Dielectric	FEP	0.116 in [2.95 mm]
First Shield	Silver Copper	0.138 in [3.51 mm]
Outer Conductor		0 in [0 mm]
Jacket	FEP, Red	0.169 in [4.29 mm]

Environmental Specifications

Temperature

Operating Range	-65 to +200 deg C

Compliance Certifications (see product page for current document)

Plotted and Other Data

Notes:
1) All tests preformed in accordacne with MIL-DTL-17 (current issue).
2) All materials are RoHS and REACH compliant.

© 2023 Infinite Electronics, Inc. Pasternack is a registered trademark of Infinite Electronics, Inc.
+1 (866) 558-2786 | sales@pasternack.com | pasternack.com

40kV Flexible RG303 High Voltage Coax Cable Single Shielded with Red PUR Jacket

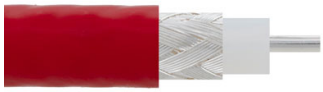

RG303HV

40kV Flexible RG303 High Voltage Coax Cable Single Shielded with Red PUR Jacket from Pasternack Enterprises has same day shipment for domestic and International orders. Our RF, microwave and millimeter wave products maintain a 99.4% availability and are part of the broadest selection in the industry.

Click the following link (or enter part number in "SEARCH" on website) to obtain additional part information including price, inventory and certifications: 40kV Flexible RG303 High Voltage Coax Cable Single Shielded with Red PUR Jacket RG303HV

URL: https://www.pasternack.com/flexible-rg303-fep-jacket-silver-copper-outer-conductor-single-shielded-rg303hv-p.aspx

The information contained within this document is accurate to the best of our knowledge and representative of the part described herein. It may be necessary to make modifications to the part and/or the documentation of the part in order to impliment improvements. Pasternack Enterprises reserves the right to make such changes as required. Unless otherwise stated, all specifications are nominal. Pasternack Enterprises does not make any representation or warranty regarding the suitability of the part described herein for any particular purpose, and Pasternack Enterprises does not assume liability arising out of the use of any part or document.

© 2023 Infinite Electronics, Inc. Pasternack is a registered trademark of Infinite Electronics, Inc.

RG303HV CAD Drawing

40kV Flexible RG303 High Voltage Coax Cable Single Shielded with Red PUR Jacket

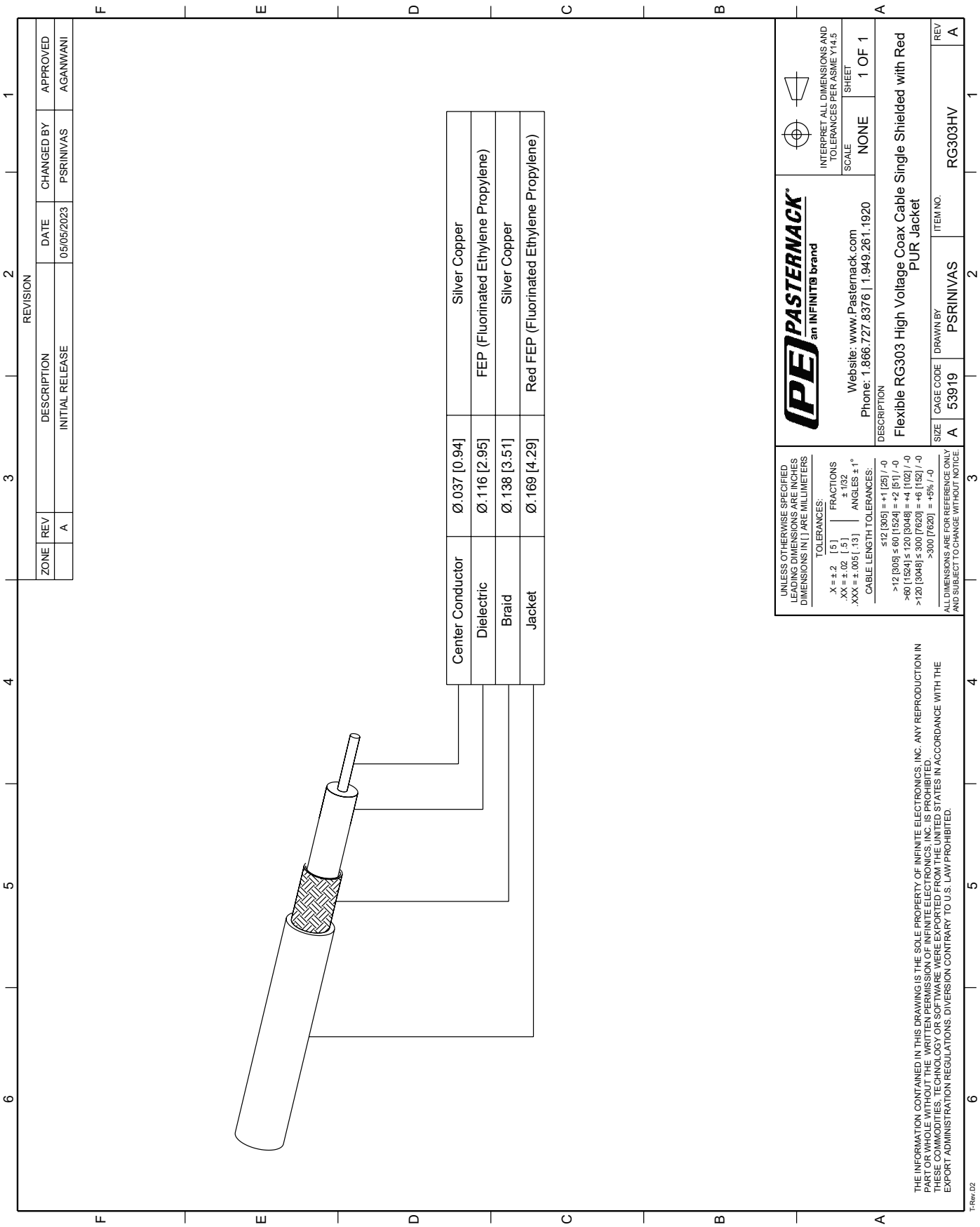

© 2023 Infinite Electronics, Inc. Pasternack is a registered trademark of Infinite Electronics, Inc.