PASTERNACK®
THE ENGINEER'S RF SOURCE

2.92mm Female Connector Clamp/Solder Attachment for PE-047SR, PE-SR047AL, PE-SR047FL

RF Connectors Technical Data Sheet PE44798

Configuration

- 2.92mm Female Connector
- 50 Ohms
- Straight Body Geometry
- PE-047SR, PE-SR047AL, PE-SR047FL Interface Type
- Clamp/Solder Attachment

Features

- Max. Operating Frequency 40 GHz
- Good VSWR of 1.35:1
- Gold over Nickel Plated Beryllium Copper Contact
- 50 µin minimum contact plating

Applications

- General Purpose Test
- Custom Cable Assemblies

Description

Pasternack's PE44798 2.92mm female connector with clamp/solder attachment for PE-047SR, PE-SR047AL and PE-SR047FL is part of our full line of RF components available for same-day shipping. Our 2.92mm female connector operates up to a maximum frequency of 40 GHz and offers good VSWR of 1.35:1.

Our 2.92mm female connector PE44798 datasheet specifications and drawing with dimensions are shown below in this PDF. Pasternack's broad catalog of RF, microwave and millimeter wave connectors allows designers to configure and customize their signal connections however they like. Whether the need is to provide an I/O for a board design, or simply create a custom cable assembly configuration, Pasternack has the right connector for the job. Pasternack can also expertly build your custom cable assemblies for you and ship same-day.

Electrical Specifications

Description	Minimum	Typical	Maximum	Units
Frequency Range	DC		40	GHz
VSWR			1.35:1	

Mechanical Specifications

Size

Length	0.566 in [14.38 mm]
Width/Dia.	0.3 in [7.62 mm]
Weight	0.015 lbs [6.8 g]

Click the following link (or enter part number in "SEARCH" on website) to obtain additional part information including price, inventory and certifications: 2.92mm Female Connector Clamp/Solder Attachment for PE-047SR, PE-SR047AL, PE-SR-047FL PE44798

Pasternack Enterprises, Inc. • P.O. Box 16759, Irvine, CA 92623
Phone: (866) 727-8376 or (949) 261-1920 • **Fax:** (949) 261-7451
Sales@Pasternack.com • Techsupport@Pasternack.com

© 2016 Pasternack Enterprises All Rights Reserved

2.92mm Female Connector Clamp/Solder Attachment for PE-047SR, PE-SR047AL, PE-SR047FL

Material Specifications

Description	Material	Plating
Contact	Beryllium Copper	Gold over Nickel 50 µin minimum
Insulation	PEI	
Body	Passivated Stainless Steel	SAE-AMS-2700

Compliance Certifications (see product page for current document)

Plotted and Other Data

Notes:

2.92mm Female Connector Clamp/Solder Attachment for PE-047SR, PE-SR047AL, PE-SR047FL from Pasternack Enterprises has same day shipment for domestic and International orders. Our RF, microwave and millimeter wave products maintain a 99% availability and are part of the broadest selection in the industry.

Click the following link (or enter part number in "SEARCH" on website) to obtain additional part information including price, inventory and certifications: 2.92mm Female Connector Clamp/Solder Attachment for PE-047SR, PE-SR047AL, PE-SR047FL PE44798

URL: https://www.pasternack.com/2.92mm-female-standard-pe-047sr-pe-sr047al-pe-sr047fl-connector-pe44798-p.aspx

The information contained in this document is accurate to the best of our knowledge and representative of the part described herein. It may be necessary to make modifications to the part and/or the documentation of the part, in order to implement improvements. Pasternack reserves the right to make such changes as required. Unless otherwise stated, all specifications are nominal. Pasternack does not make any representation or warranty regarding the suitability of the part described herein for any particular purpose, and Pasternack does not assume any liability arising out of the use of any part or documentation.

Pasternack Enterprises, Inc. • P.O. Box 16759, Irvine, CA 92623
Phone: (866) 727-8376 or (949) 261-1920 • **Fax:** (949) 261-7451
Sales@Pasternack.com • Techsupport@Pasternack.com

© 2016 Pasternack Enterprises All Rights Reserved

PE44798 CAD Drawing

2.92mm Female Connector Clamp/Solder Attachment
for PE-047SR, PE-SR047AL, PE-SR047FL

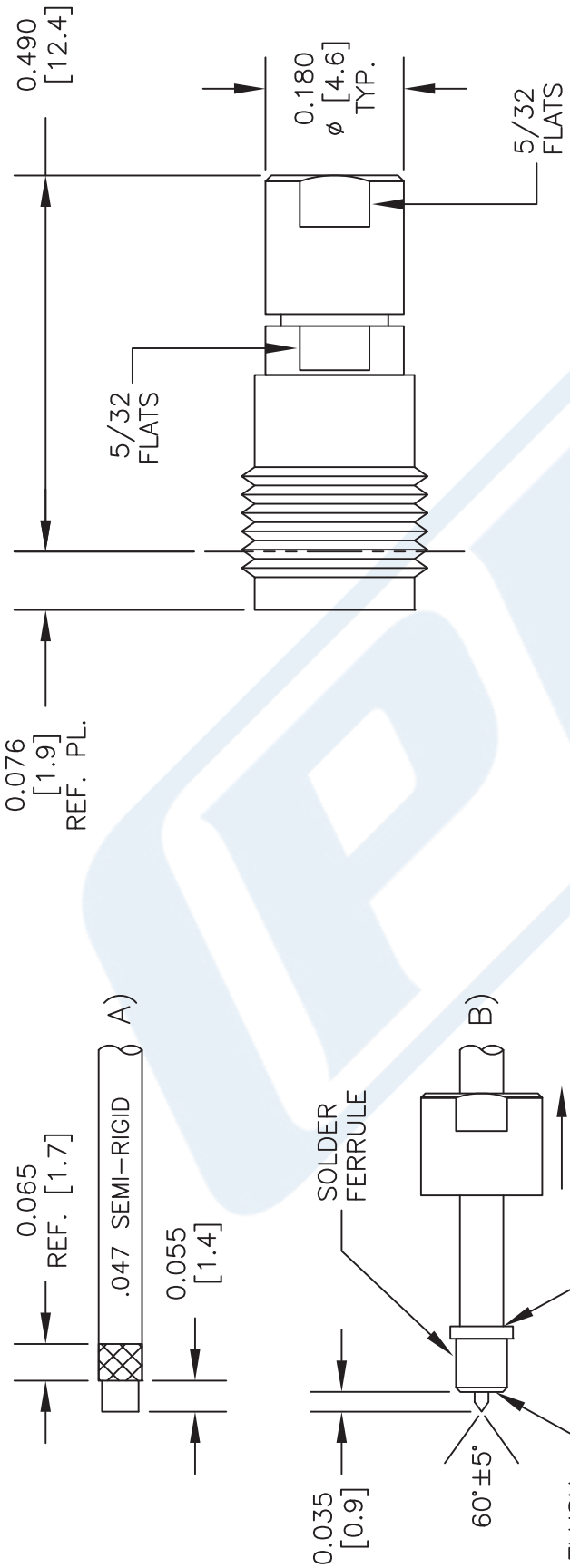

STRIPPING DIMENSIONS

ASSEMBLY PROCEDURES

1. STRIP CABLE AS SHOWN IN (A). DO NOT NICK DIELECTRIC.
2. PRE-TIN CABLE JACKET TO APPROXIMATE DIMENSION AS SHOWN IN (A).
3. INSERT CABLE THRU ADAPTER UNTIL IT BOTTOMS OUT. SOLDER OUTER CONDUCTOR TO ADAPTER & TRIM DIELECTRIC AS SHOWN IN (B).
4. SCREW ASSEMBLY INTO BODY & TIGHTEN NUT.

NOTES:
1. UNLESS OTHERWISE SPECIFIED ALL DIMENSIONS ARE NOMINAL.
2. ALL SPECIFICATIONS ARE SUBJECT TO CHANGE WITHOUT NOTICE AT ANY TIME.
3. DIMENSIONS ARE IN INCHES [mm].
4. FITS MIL-C-17 AND EQUIVALENT CABLES.

DWG TITLE
PE44798

FSCM NO. 53919

CAD FILE 042413 | SCALE N/A | SIZE A | 2233

PASTERNACK®
Pasternack Enterprises, Inc.
P.O. Box 16759 | Irvine | CA | 92623
Phone: (949) 261-1920 | **Fax:** (949) 261-7451
Website: www.pasternack.com | **E-Mail:** sales@pasternack.com

© 2016 Pasternack Enterprises All Rights Reserved

PASTERNACK®
THE ENGINEER'S RF SOURCE

Mini SMP Female Connector Solder Attachment for PE-047SR, PE-SR047AL, PE-SR047FL

RF Connectors Technical Data Sheet PE44491

Configuration

- Mini SMP Female Connector
- MIL-STD-348A
- 50 Ohms
- Straight Body Geometry
- PE-047SR, PE-SR047AL, PE-SR047FL Interface Type
- Solder Attachment

Features

- Max. Operating Frequency 65 GHz
- Good VSWR of 1.68:1
- Gold Plated Beryllium Copper Contact
- Blind Mate Connector

Applications

- General Purpose Test
- Custom Cable Assemblies

Description

Pasternack's PE44491 Mini SMP female connector with solder attachment for PE-047SR, PE-SR047AL and PE-SR047FL is part of our full line of RF components available for same-day shipping. Our Mini SMP female connector operates up to a maximum frequency of 65 GHz and offers good VSWR of 1.68:1. The Pasternack blind mate connector is ideal for applications where direct visual or tactile access to the connection point is not possible, for example, when two circuit boards need to be mated.

Our Mini SMP female connector PE44491 datasheet specifications and drawing with dimensions are shown below in this PDF. Pasternack's broad catalog of RF, microwave and millimeter wave connectors allows designers to configure and customize their signal connections however they like. Whether the need is to provide an I/O for a board design, or simply create a custom cable assembly configuration, Pasternack has the right connector for the job. Pasternack can also expertly build your custom cable assemblies for you and ship same-day.

Electrical Specifications

Description	Minimum	Typical	Maximum	Units
Frequency Range	DC		65	GHz
VSWR			1.68:1	
Operating Voltage (AC)			325	Vrms
Inner Conductor DC Resistance			6	mOhms
Outer Conductor DC Resistance			2	mOhms
Insulation Resistance	5,000			MOhms

Performance by Frequency

Description	F1	F2	F3	F4	F5	Units
Frequency Range	DC to 18	18 to 40	40 to 65			GHz
VSWR, Max	1.11:1	1.33:1	1.68:1			

Click the following link (or enter part number in "SEARCH" on website) to obtain additional part information including price, inventory and certifications: Mini SMP Female Connector Solder Attachment for PE-047SR, PE-SR047AL, PE-SR047FL PE44491

Pasternack Enterprises, Inc. • P.O. Box 16759, Irvine, CA 92623
Phone: (866) 727-8376 or (949) 261-1920 • **Fax:** (949) 261-7451
Sales@Pasternack.com • Techsupport@Pasternack.com

© 2016 Pasternack Enterprises All Rights Reserved

Mini SMP Female Connector Solder Attachment for PE-047SR, PE-SR047AL, PE-SR047FL

Electrical Specification Notes:
Insertion loss = 0.04 x sqrt(fGHz) dB max up to 26.5 GHz.

Mechanical Specifications

Size

Length	0.26 in [6.6 mm]
Width/Dia.	0.13 in [3.30 mm]
Weight	0.006 lbs [2.72 g]

Material Specifications

Description	Material	Plating
Contact	Beryllium Copper	Gold
Insulation	PTFE	
Body	Beryllium Copper	Gold

Mechanical Specification Notes:
Mating cycles: 500 (smooth bore), 100 (full detent) minimum.

Environmental Specifications

Temperature

Operating Range	-55 to +155 deg C
Humidity	MIL-STD-202, Method 106
Shock	MIL-STD-202, Method 213, Condition A
Vibration	MIL-STD-202, Method 204, Condition A
Thermal Shock	MIL-STD-202, Method 107, Condition B

Click the following link (or enter part number in "SEARCH" on website) to obtain additional part information including price, inventory and certifications: Mini SMP Female Connector Solder Attachment for PE-047SR, PE-SR047AL, PE-SR047FL PE44491

Pasternack Enterprises, Inc. • P.O. Box 16759, Irvine, CA 92623
Phone: (866) 727-8376 or (949) 261-1920 • **Fax:** (949) 261-7451
Sales@Pasternack.com • Techsupport@Pasternack.com

© 2016 Pasternack Enterprises All Rights Reserved

Mini SMP Female Connector Solder Attachment for PE-047SR, PE-SR047AL, PE-SR047FL

Compliance Certifications (see product page for current document)

Plotted and Other Data

Notes:

Mini SMP Female Connector Solder Attachment for PE-047SR, PE-SR047AL, PE-SR047FL from Pasternack Enterprises has same day shipment for domestic and International orders. Our RF, microwave and millimeter wave products maintain a 99% availability and are part of the broadest selection in the industry.

Click the following link (or enter part number in "SEARCH" on website) to obtain additional part information including price, inventory and certifications: Mini SMP Female Connector Solder Attachment for PE-047SR, PE-SR047AL, PE-SR047FL PE44491

URL: https://www.pasternack.com/mini-smp-female-standard-pe-047sr-pe-sr047al-pe-sr047fl-connector-pe44491-p.aspx

The information contained in this document is accurate to the best of our knowledge and representative of the part described herein. It may be necessary to make modifications to the part and/or the documentation of the part, in order to implement improvements. Pasternack reserves the right to make such changes as required. Unless otherwise stated, all specifications are nominal. Pasternack does not make any representation or warranty regarding the suitability of the part described herein for any particular purpose, and Pasternack does not assume any liability arising out of the use of any part or documentation.

Pasternack Enterprises, Inc. • P.O. Box 16759, Irvine, CA 92623
Phone: (866) 727-8376 or (949) 261-1920 • **Fax:** (949) 261-7451
Sales@Pasternack.com • Techsupport@Pasternack.com

© 2016 Pasternack Enterprises All Rights Reserved

PE44491 CAD Drawing

Mini SMP Female Connector Solder Attachment for PE-047SR, PE-SR047AL, PE-SR047FL

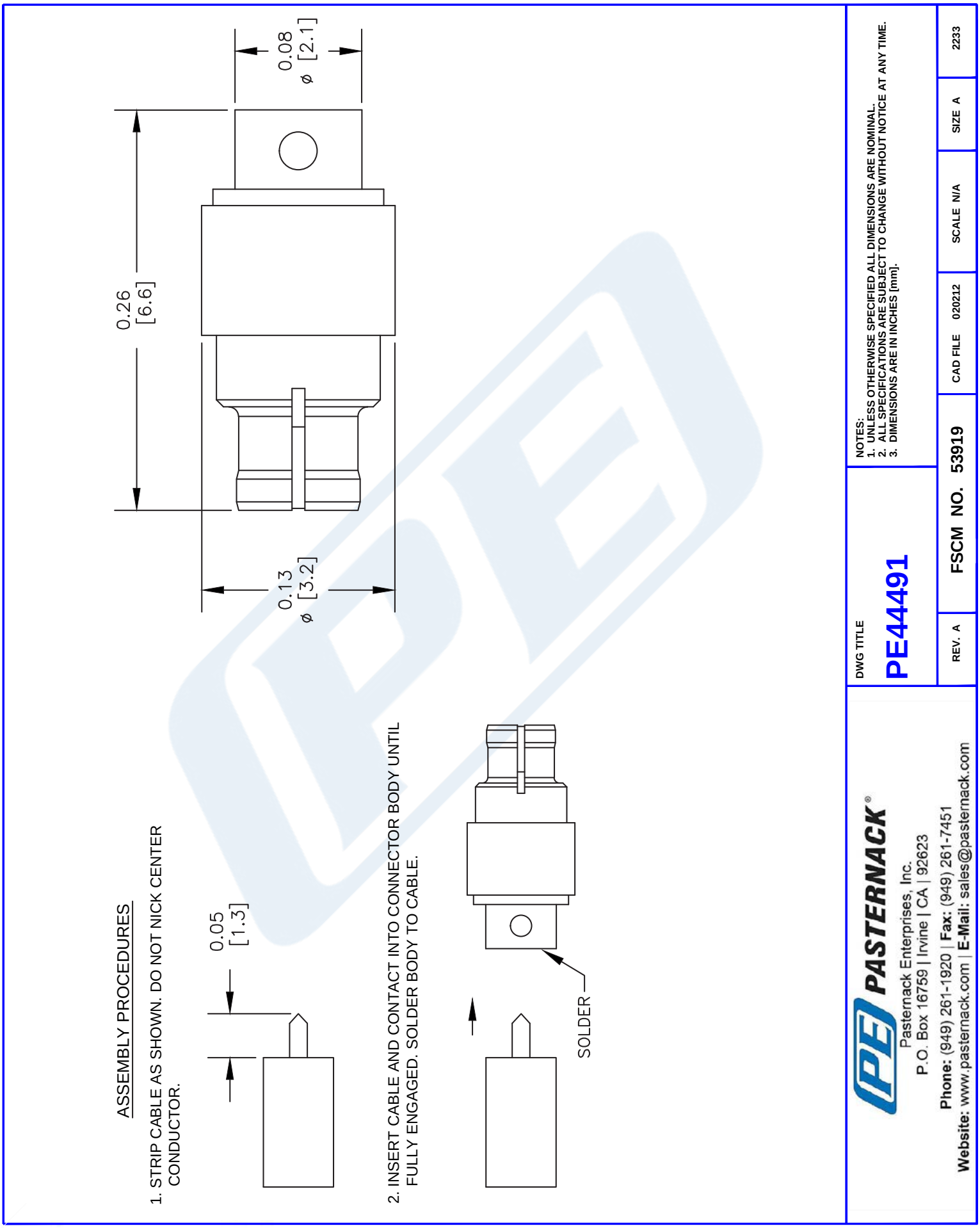

© 2016 Pasternack Enterprises All Rights Reserved

Formable 047 Semi-rigid Coax Cable with Tinned Copper Braid Outer Conductor

RF Cables
Technical Data Sheet

PE-SR047FL

Configuration

- Formable Cable
- 1 Shield(s)

Features

- Dimensionally and electrically the same as standard, solid outer conductor semi-rigid coax
- May be formed by hand and does not require special tools to bend
- May be formed more than once without damaging the outer conductor
- Tinned Copper Braid Outer Conductor
- Max Frequency 20 GHz

Applications

- Test and Measurement
- Communication Systems
- Wireless Systems
- Medical Equipment
- RADAR
- Low Loss Applications

Description

Formable semi-rigid coaxial cable is a hand formable version of standard semi-rigid that does not require complicated and costly preformed cable assemblies. Because the dimensions and electrical characteristics are so closely matched to semi-rigid coax, standard semi-rigid connectors can be used. Pasternack's PE-SR047FL is a formable .047 semi-rigid coax cable with tinned copper braid outer conductor, providing low loss and excellent RF shielding effectiveness. This semi-flexible cable has an FEP jacket to reduce the chance of shorting exposed contacts or circuit conductors. Pasternack's formable cable can be used as an alternative to semi-rigid coaxial cable in applications where flexibility is required without giving up high electrical performance level. PE-SR047FL datasheet specifications and outline drawing for this .047 semi-flexible hand formable cable are shown in the PDF below.

Pasternack carries a wide range of cables ready to ship same day to fit your needs. They are available in corrugated, flexible, formable or semi-rigid versions with different constructions of conductor materials, dielectric materials, shielding configurations and jacket materials. Our cables are designed to fit a wide range of performance criteria including attenuation, operating temperature, environmental factor, and power capability.

Electrical Specifications

Description	Minimum	Typical	Maximum	Units
Frequency Range	DC		20	GHz
Impedance		50		Ohms
Velocity of Propagation		69.5		%
Inner Conductor DC Resistance			207	Ohms/1000ft
Outer Conductor DC Resistance			8	Ohms/1000ft
Nominal Capacitance		32 [104.99]		pF/ft [pF/m]

Click the following link (or enter part number in "SEARCH" on website) to obtain additional part information including price, inventory and certifications: Formable 047 Semi-rigid Coax Cable with Tinned Copper Braid Outer Conductor PE-SR047FL

Pasternack Enterprises, Inc. • P.O. Box 16759, Irvine, CA 92623
Phone: (866) 727-8376 or (949) 261-1920 • **Fax:** (949) 261-7451
Sales@Pasternack.com • Techsupport@Pasternack.com

© 2018 Pasternack Enterprises All Rights Reserved

Formable 047 Semi-rigid Coax Cable with Tinned Copper Braid Outer Conductor

RF Cables
Technical Data Sheet

PE-SR047FL

Performance by Frequency Band

Description	F1	F2	F3	F4	F5	Units
Frequency	0.5	1	3	5	10	GHz
Attenuation, Typ	25	36	65	86	128	dB/100ft
	82.02	118.11	213.25	282.15	419.95	dB/100m

Description	F6	F7	F8	F9	F10	Units
Frequency	15	20				GHz
Attenuation, Typ	162	192				dB/100ft
	531.5	629.92				dB/100m

Mechanical Specifications

Construction Specifications

Description	Material and Plating	Diameter
Inner Conductor	Copper Clad Steel, Silver1	0.011 in 0.28 mm
Conductor Type	Solid	
Dielectric	PTFE	0.034 in 0.86 mm
Outer Conductor	Tinned Copper Braid	0.047 in 1.19 mm

Environmental Specifications

Temperature

Operating Range -40 to +100 deg C

Click the following link (or enter part number in "SEARCH" on website) to obtain additional part information including price, inventory and certifications: Formable 047 Semi-rigid Coax Cable with Tinned Copper Braid Outer Conductor PE-SR047FL

Pasternack Enterprises, Inc. • P.O. Box 16759, Irvine, CA 92623
Phone: (866) 727-8376 or (949) 261-1920 • **Fax:** (949) 261-7451
Sales@Pasternack.com • Techsupport@Pasternack.com

© 2018 Pasternack Enterprises All Rights Reserved

Compliance Certifications (see product page for current document)

Plotted and Other Data

Notes:

Formable 047 Semi-rigid Coax Cable with Tinned Copper Braid Outer Conductor from Pasternack Enterprises has same day shipment for domestic and International orders. Our RF, microwave and millimeter wave products maintain a 99.4% availability and are part of the broadest selection in the industry.

Click the following link (or enter part number in "SEARCH" on website) to obtain additional part information including price, inventory and certifications: Formable 047 Semi-rigid Coax Cable with Tinned Copper Braid Outer Conductor PE-SR047FL

URL: https://www.pasternack.com/formable-0.047-semirigid-replacement-50-ohm-coax-cable-tinned-braid-pe-sr047fl-p.aspx

The information contained in this document is accurate to the best of our knowledge and representative of the part described herein. It may be necessary to make modifications to the part and/or the documentation of the part, in order to implement improvements. Pasternack reserves the right to make such changes as required. Unless otherwise stated, all specifications are nominal. Pasternack does not make any representation or warranty regarding the suitability of the part described herein for any particular purpose, and Pasternack does not assume any liability arising out of the use of any part or documentation.

Pasternack Enterprises, Inc. • P.O. Box 16759, Irvine, CA 92623
Phone: (866) 727-8376 or (949) 261-1920 • **Fax:** (949) 261-7451
Sales@Pasternack.com • Techsupport@Pasternack.com

© 2018 Pasternack Enterprises All Rights Reserved

PE-SR047FL CAD Drawing

Formable 047 Semi-rigid Coax Cable with Tinned Copper Braid Outer Conductor

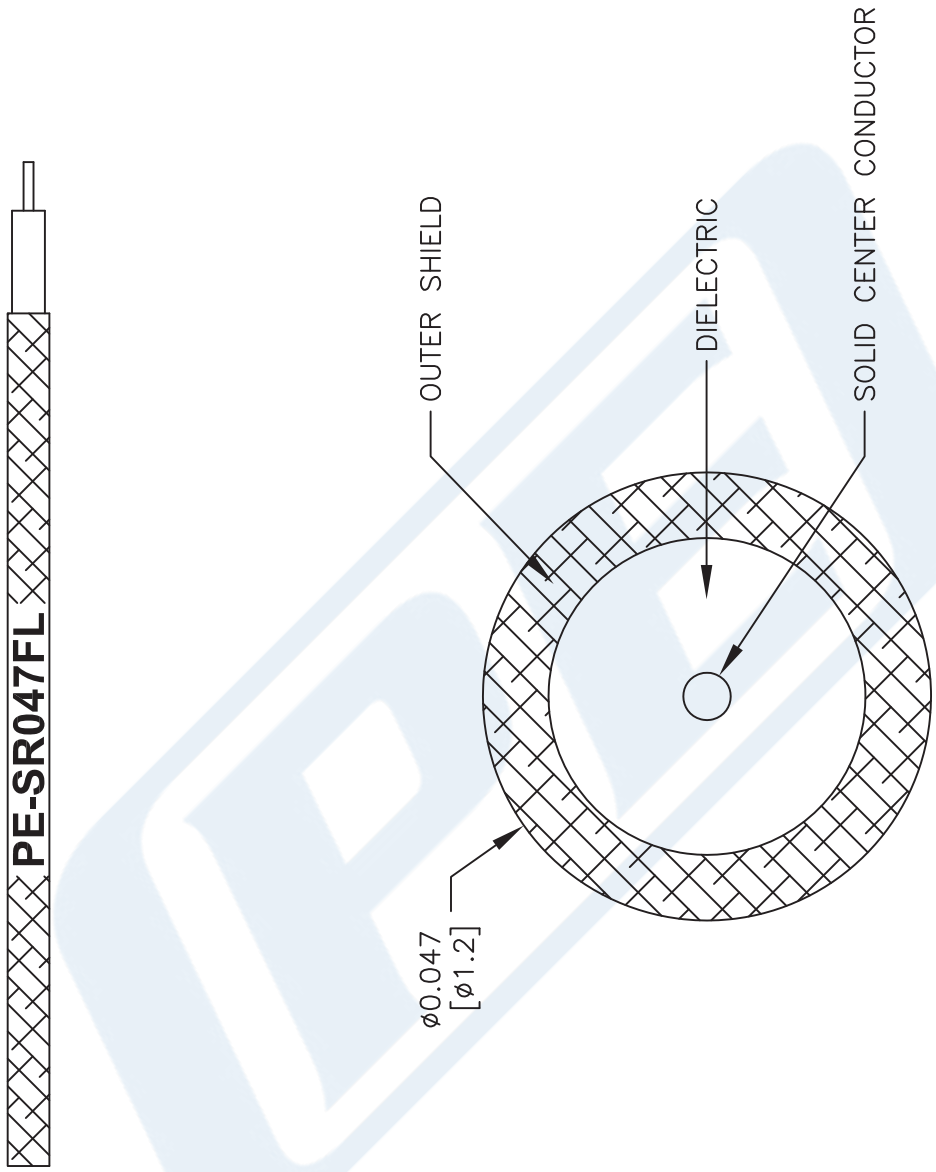

NOTES:
1. UNLESS OTHERWISE SPECIFIED ALL DIMENSIONS ARE NOMINAL.
2. ALL SPECIFICATIONS ARE SUBJECT TO CHANGE WITHOUT NOTICE AT ANY TIME.
3. DIMENSIONS ARE IN INCHES [mm].

DWG TITLE
PE-SR047FL

FSCM NO. 53919

CAD FILE 111716 | SCALE N/A | SIZE A | 41742

PASTERNACK®
THE ENGINEER'S RF SOURCE
Pasternack Enterprises, Inc.
P.O. Box 16759 | Irvine | CA | 92623
Phone: (949) 261-1920 | **Fax:** (949) 261-7451
Website: www.pasternack.com | **E-Mail:** sales@pasternack.com

© 2018 Pasternack Enterprises All Rights Reserved