PASTERNACK®
THE ENGINEER'S RF SOURCE

# QMA Male Right Angle Connector Crimp/Solder Attachment for RG174, RG316, RG188



## Configuration

- QMA Male Connector
- 50 Ohms
- Right Angle Body Geometry
- RG174, RG316, RG188 Interface Type
- Crimp/Solder Attachment

## Features

- Max. Operating Frequency 6 GHz
- Good VSWR of 1.35:1
- Gold Plated Brass Contact

## Applications

- General Purpose Test
- Custom Cable Assemblies

### Description

Pasternack's PE45284 QMA male right angle connector with crimp/solder attachment for RG174, RG316 and RG188 is part of our full line of RF components available for same-day shipping. Our QMA male connector operates up to a maximum frequency of 6 GHz and offers good VSWR of 1.35:1. Its right angle body geometry allows for easier connections in tight spaces.

Our QMA male right angle connector PE45284 datasheet specifications and drawing with dimensions are shown below in this PDF. Pasternack's broad catalog of RF, microwave and millimeter wave connectors allows designers to configure and customize their signal connections however they like. Whether the need is to provide an I/O for a board design, or simply create a custom cable assembly configuration, Pasternack has the right connector for the job. Pasternack can also expertly build your custom cable assemblies for you and ship same-day.

### Electrical Specifications

| Description | Minimum | Typical | Maximum | Units |
|---|---|---|---|---|
| Frequency Range | DC | | 6 | GHz |
| VSWR | | | 1.35:1 | |
| Insertion Loss | | | 0.12 | dB |
| Operating Voltage (AC) | | | 250 | Vrms |
| Dielectric Withstanding Voltage (AC) | | | 750 | Vrms |
| Insulation Resistance | 5,000 | | | MOhms |
| RF Leakage | 74 | | | dB |

### Mechanical Specifications

**Size**

| | |
|---|---|
| Length | 0.77 in [19.56 mm] |
| Width/Dia. | 0.413 in [10.49 mm] |
| Height | 0.634 in [16.1 mm] |

Click the following link (or enter part number in "SEARCH" on website) to obtain additional part information including price, inventory and certifications: QMA Male Right Angle Connector Crimp/Solder Attachment for RG174, RG316, RG188 PE45284

Pasternack Enterprises, Inc. • P.O. Box 16759, Irvine, CA 92623
**Phone:** (866) 727-8376 or (949) 261-1920 • **Fax:** (949) 261-7451
Sales@Pasternack.com • Techsupport@Pasternack.com

© 2016 Pasternack Enterprises All Rights Reserved

# QMA Male Right Angle Connector Crimp/Solder Attachment for RG174, RG316, RG188



| | |
|---|---|
| Weight | 0.076 lbs [34.47 g] |
| Mating Cycles | 100 Cycles |

**Material Specifications**

| Description | Material | Plating |
|---|---|---|
| Contact | Brass | Gold |
| Insulation | PTFE | |
| Body | Brass | Tri-Metal |
| Coupling Nut | Brass | Nickel |

## Environmental Specifications

**Temperature**

| | |
|---|---|
| Operating Range | -40 to +105 deg C |

## Compliance Certifications (see product page for current document)

## Plotted and Other Data

Notes:

QMA Male Right Angle Connector Crimp/Solder Attachment for RG174, RG316, RG188 from Pasternack Enterprises has same day shipment for domestic and International orders. Our RF, microwave and millimeter wave products maintain a 99% availability and are part of the broadest selection in the industry.

Click the following link (or enter part number in "SEARCH" on website) to obtain additional part information including price, inventory and certifications: QMA Male Right Angle Connector Crimp/Solder Attachment for RG174, RG316, RG188 PE45284

URL: https://www.pasternack.com/qma-male-rg174-rg316-rg188-connector-pe45284-p.aspx

The information contained in this document is accurate to the best of our knowledge and representative of the part described herein. It may be necessary to make modifications to the part and/or the documentation of the part, in order to implement improvements. Pasternack reserves the right to make such changes as required. Unless otherwise stated, all specifications are nominal. Pasternack does not make any representation or warranty regarding the suitability of the part described herein for any particular purpose, and Pasternack does not assume any liability arising out of the use of any part or documentation.

Pasternack Enterprises, Inc. • P.O. Box 16759, Irvine, CA 92623
**Phone:** (866) 727-8376 or (949) 261-1920 • **Fax:** (949) 261-7451
Sales@Pasternack.com • Techsupport@Pasternack.com

© 2016 Pasternack Enterprises All Rights Reserved

# PE45284 CAD Drawing

QMA Male Right Angle Connector Crimp/Solder Attachment for RG174, RG316, RG188

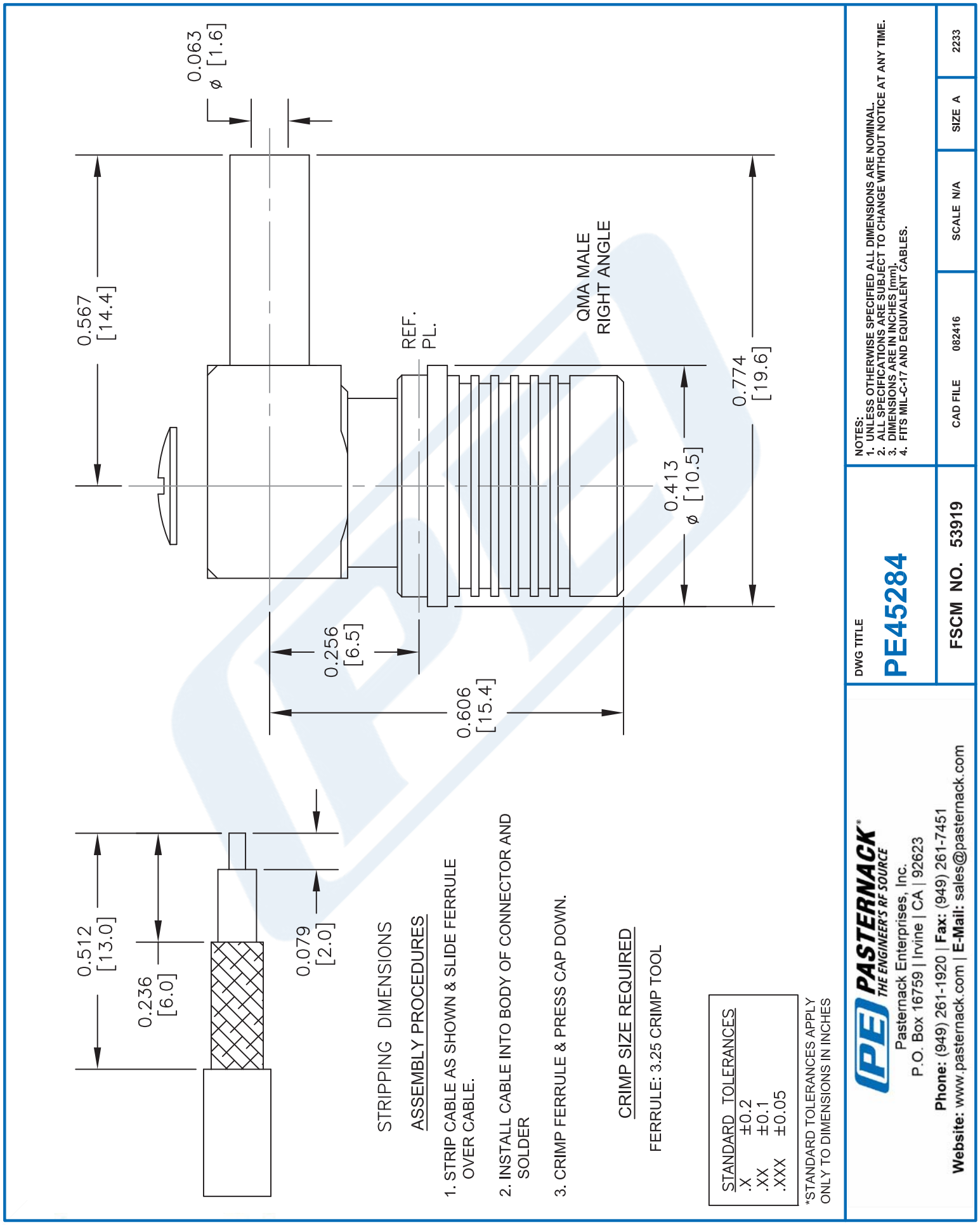


© 2016 Pasternack Enterprises All Rights Reserved

PASTERNACK®
www.pasternack.com

# Mini UHF Female Connector Crimp/Solder Attachment For RG174, RG316, RG188

TECHNICAL DATA SHEET PE44085

**Mini UHF Female Connector Crimp/Solder Attachment For RG174, RG316, RG188**

## Configuration

| | |
|---|---|
| Connector | Mini UHF Female |
| Connector Interface Type | RG174,RG316,RG188 |
| Cable Attachment Method (Shield/Contact) | Crimp/Solder |
| Body Style | Straight |

## Electrical Specifications

| | |
|---|---|
| Impedance, Ohms | 50 |

## Mechanical Specifications

**Size**

| | |
|---|---|
| Length, in [mm] | 1.185 [30.1] |
| Width/Dia., in [mm] | 0.433 [11.00] |
| Weight, lbs [g] | 0.013 [5.9] |

**Connector**

| | |
|---|---|
| Type | Mini UHF Female |
| Contact Material and Plating | Gold |
| Body Material and Plating | Brass, Nickel |
| Dielectric Type | PTFE |

## Compliance Certifications (visit www.Pasternack.com for current document)

| | |
|---|---|
| RoHS Compliant | Yes |

## Plotted and Other Data

| | |
|---|---|
| Notes: | Values at 25 °C, sea level |

Mini UHF Female Connector Crimp/Solder Attachment For RG174, RG316, RG188 from Pasternack Enterprises has same day shipment for domestic and International orders. Our RF, microwave and fiber optic products maintain a 99% availability and are part of the broadest selection in the industry.

Click the following link (or enter part number in “SEARCH” on website) to obtain additional part information including price, inventory and certifications: Mini UHF Female Connector Crimp/Solder Attachment For RG174, RG316, RG188 PE44085

URL: http://www.pasternack.com/mini-uhf-female-standard-rg174-rg316-rg188-connector-pe44085-p.aspx

The information contained in this document is accurate to the best of our knowledge and representative of the part described herein. It may be necessary to make modifications to the part and/or the documentation of the part, in order to implement improvements. Pasternack reserves the right to make such changes as required. Unless otherwise stated, all specifications are nominal.

Pasternack Enterprises, Inc. • P.O. Box 16759, Irvine, CA 92623
**Phone:** (866) 727-8376 or (949) 261-1920 • **Fax:** (949) 261-7451
Sales@Pasternack.com • Techsupport@Pasternack.com

© 2013 Pasternack Enterprises All Rights Reserved

# PE44085 CAD Drawing

Mini UHF Female Connector Crimp/Solder Attachment For RG174, RG316, RG188

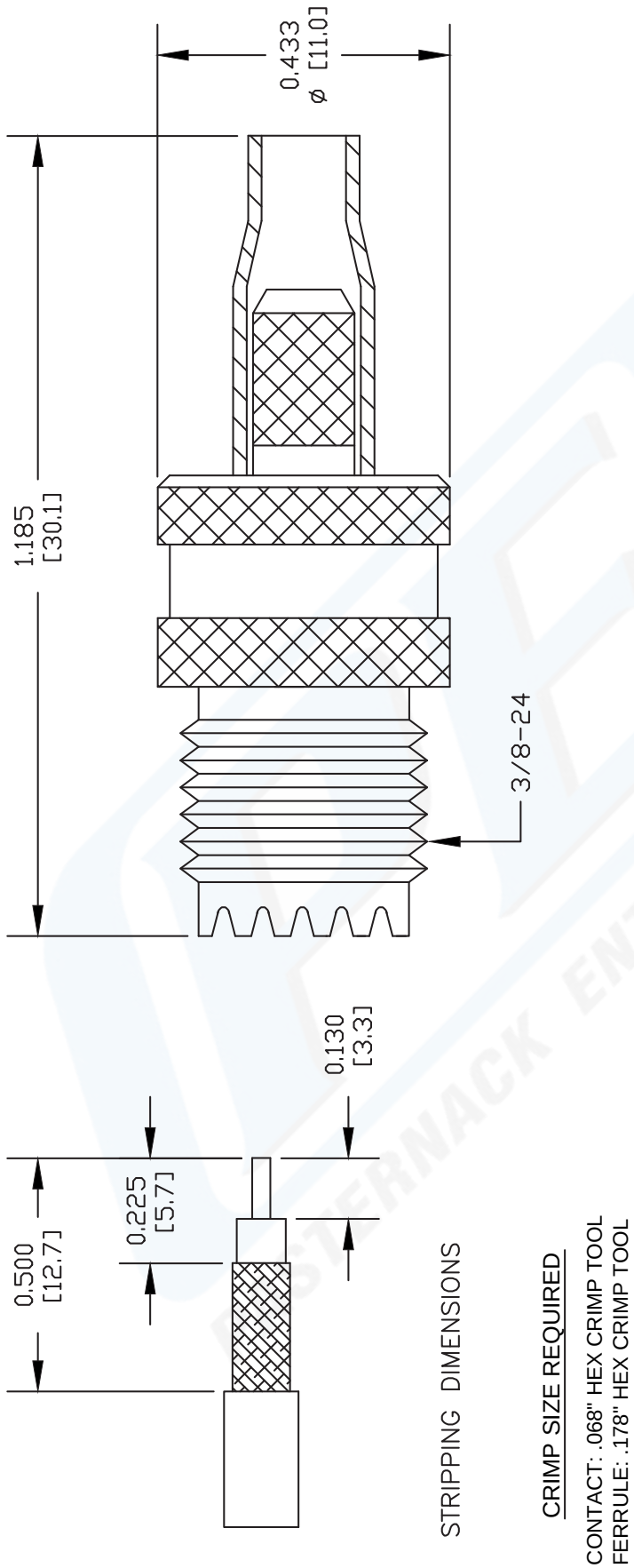


NOTES:
1. UNLESS OTHERWISE SPECIFIED ALL DIMENSIONS ARE NOMINAL.
2. ALL SPECIFICATIONS ARE SUBJECT TO CHANGE WITHOUT NOTICE AT ANY TIME.
3. DIMENSIONS ARE IN INCHES [mm].
4. FITS MIL-C-17 AND EQUIVALENT CABLES.

| | | | |
|---|---|---|---|
| DWG TITLE PE44085 | CAD FILE 062502 | SCALE N/A | SIZE A | XXXX |
| FSCM NO. 53919 | | | |


PASTERNACK®
Pasternack Enterprises, Inc.
P.O. Box 16759 | Irvine | CA | 92623
**Phone:** (949) 261-1920 | **Fax:** (949) 261-7451
**Website:** www.pasternack.com | **E-Mail:** sales@pasternack.com


© 2013 Pasternack Enterprises All Rights Reserved

# Flexible RG188 Coax Cable Single Shielded with White PTFE Jacket

## RG188A/U

### Configuration

- Flexible Cable
- 1 Shield(s)

### Features

- High temperature 50 Ohm data signal transmission
- Teflon taped outer jacket results in a 200 degree C operating temperature
- Stranded center conductor allows cable to be very flexible
- Small diameter is ideal for tight fit applications
- Associated connectors and crimp tools available

### Applications

- Ethernet
- Data
- Premise Wiring
- R&D

### Description

RG188 coax cable from Pasternack is only one of a large number of radio frequency twinaxial and coaxial cable types specifically stocked to be ready for quick shipment. Pasternack's RG188A/U coax cable is manufactured in a flexible design and has a 50 Ohm impedance. This flexible 50 Ohm coax cable RG188 is constructed with a 0.11 inch diameter and PTFE jacket.

RG188 RG188A/U flexible 50 Ohm coax cable with PTFE jacket is rated for a 3 GHz maximum operating frequency. This 50 Ohm 0.11 inch diameter and flexible coax cable is built with a shield count of 1.

Pasternack's RG188 coax is constructed with PTFE dielectric and a maximum operating temperature of 250 degrees C. RG188 coax cable specs for this wire properties can be found on its RF coax cable RG-188 datasheet PDF specifications above.

RG188 cable is part of more than one million RF, microwave and millimeter wave parts in stock at Pasternack. This RG-188 coax cable is ready to buy and can be shipped worldwide. Pasternack also maintains a wide selection of other radio frequency twinaxial and coaxial cable types that ship same-day from our warehouse as with the rest of our other RF/microwave and millimeter wave components.

### Electrical Specifications

| Description | Minimum | Typical | Maximum | Units |
|---|---|---|---|---|
| Frequency Range | DC | | 3 | GHz |
| Impedance | | 50 | | Ohms |
| Velocity of Propagation | | 70 | | % of c |
| Time Delay | | 1.45 [4.76] | | ns/ft [ns/m] |
| Dielectric Withstanding Voltage (AC) | | | 2,000 | Vrms |
| Inner Conductor DC Resistance | | | 84.1 | Ohms/1000ft |
| Nominal Capacitance | | | 29.3 [96.13] | pF/ft [pF/m] |
| Power@ 1GHz | | | 160 | Watts |

### Performance by Frequency Band

| Description | F1 | F2 | F3 | F4 | F5 | Units |
|---|---|---|---|---|---|---|
| Frequency | 400 | | | | | MHz |


© 2023 Infinite Electronics, Inc. Pasternack is a registered trademark of Infinite Electronics, Inc.
+1 (866) 558-2786 | sales@pasternack.com | pasternack.com

# Flexible RG188 Coax Cable Single Shielded with White PTFE Jacket

## RG188A/U

### Performance by Frequency Band

| Description | F1 | F2 | F3 | F4 | F5 | Units |
|---|---|---|---|---|---|---|
| Attenuation, Typ | 20 | | | | | dB/100ft |
| | 65.62 | | | | | dB/100m |

Electrical Specification Notes:
Static Bending Radius: One Time: 0.52 inch, repeated: 1.03

### Mechanical Specifications

| | |
|---|---|
| Diameter | 0.11 in [2.79 mm} |
| Weight | 0.01 lbs/ft [0.01 kg/m] |

### Construction Specifications

| Description | Material and Plating | Diameter |
|---|---|---|
| Inner Conductor | Copper Clad Steel, Silver, 7 Strands | 0.02 in [0.51 mm] |
| Conductor Type | Stranded | |
| Dielectric | PTFE | 0.06 in [1.52 mm] |
| First Shield | Silver Plated Copper Braid | 0.081 in [2.06 mm] |
| | 95.2% coverage | |
| Jacket | PTFE, White | 0.11 in [2.79 mm] |

### Environmental Specifications

**Temperature**

| | |
|---|---|
| Operating Range | -55 to 200 deg C |

### Compliance Certifications (see product page for current document)

### Plotted and Other Data

Notes:


© 2023 Infinite Electronics, Inc. Pasternack is a registered trademark of Infinite Electronics, Inc.
+1 (866) 558-2786 | sales@pasternack.com | pasternack.com

# Flexible RG188 Coax Cable Single Shielded with White PTFE Jacket

## RG188A/U

Flexible RG188 Coax Cable Single Shielded with White PTFE Jacket from Pasternack Enterprises has same day shipment for domestic and International orders. Our RF, microwave and millimeter wave products maintain a 99.4% availability and are part of the broadest selection in the industry.

Click the following link (or enter part number in "SEARCH" on website) to obtain additional part information including price, inventory and certifications: Flexible RG188 Coax Cable Single Shielded with White PTFE Jacket RG188A/U

URL: https://www.pasternack.com/50-ohm-flexible-rg188au-ptfe-jacket-silver-plated-copper-braid-outer-conductor-single-shielded-white-rg188a-u-p.aspx

The information contained within this document is accurate to the best of our knowledge and representative of the part described herein. It may be necessary to make modifications to the part and/or the documentation of the part in order to impliment improvements. Pasternack Enterprises reserves the right to make such changes as required. Unless otherwise stated, all specifications are nominal. Pasternack Enterprises does not make any representation or warranty regarding the suitability of the part described herein for any particular purpose, and Pasternack Enterprises does not assume liability arising out of the use of any part or document.


© 2023 Infinite Electronics, Inc. Pasternack is a registered trademark of Infinite Electronics, Inc.

# RG188A/U CAD Drawing

Flexible RG188 Coax Cable Single Shielded with White PTFE Jacket

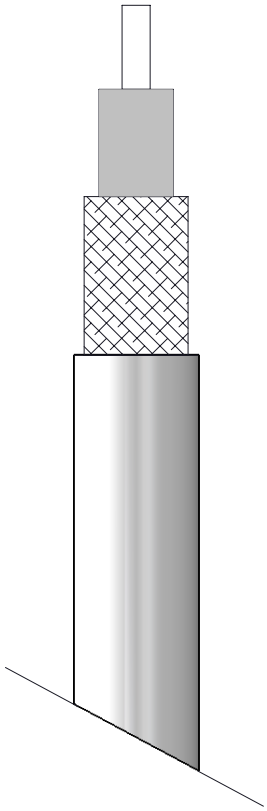

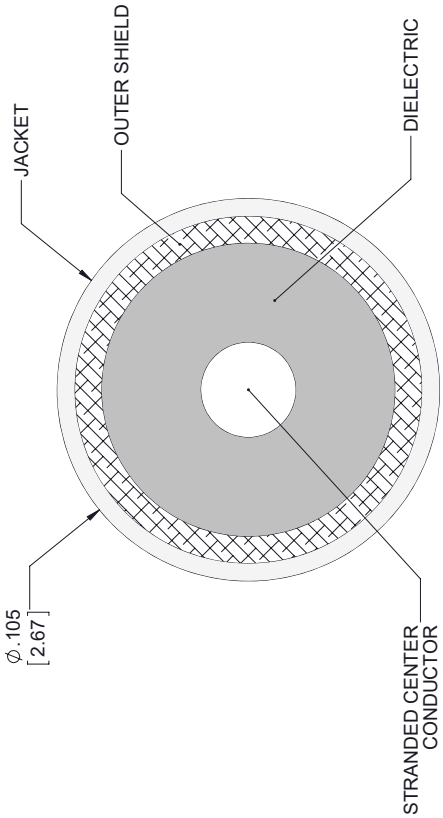


SECTION VIEW

| STANDARD TOLERANCES | |
|---|---|
| .X | ±0.2 |
| .XX | ±0.01 |
| .XXX | ±0.005 |

*STANDARD TOLERANCES APPLY ONLY TO DIMENSIONS IN INCHES

NOTES:
1. UNLESS OTHERWISE SPECIFIED ALL DIMENSIONS ARE NOMINAL.
2. ALL SPECIFICATIONS ARE SUBJECT TO CHANGE WITHOUT NOTICE AT ANY TIME.
3. DIMENSIONS ARE IN INCHES [mm].

DWG TITLE
RG188A/U

CAD FILE 091817 | SCALE N/A | SIZE A | 7361

CAGE CODE 53919

PASTERNACK®
THE ENGINEER'S RF SOURCE
Pasternack Enterprises, Inc.
P.O. Box 16759 | Irvine | CA | 92623
**Phone:** (949) 261-1920 | **Fax:** (949) 261-7451
**Website:** www.pasternack.com | **E-Mail:** sales@pasternack.com


© 2023 Infinite Electronics, Inc. Pasternack is a registered trademark of Infinite Electronics, Inc.