SMA Female Connector Clamp/Solder Attachment for RG55, RG58, RG141, RG142, RG223, RG303, RG400, PE-C195, PE-P195, LMR-195

RF Connectors
Technical Data Sheet

PE4031

Configuration

- SMA Female Connector
- MIL-STD-348
- 50 Ohms
- Straight Body Geometry
- RG55, RG58, RG141, RG142, RG223, RG303, RG400, PE-C195, PE-P195, LMR-195 Interface Type
- Clamp/Solder Attachment

Features

- Gold Plated Contact
- Contact plating according to MIL-G-45204

Applications

- General Purpose Test
- Custom Cable Assemblies

Description

Pasternack's PE4031 SMA female connector with clamp/solder attachment for RG55, RG58, RG141, RG142, RG223, RG303, RG400, PE-C195, PE-P195 and LMR-195 is part of our full line of RF components available for same-day shipping.

Our SMA female connector PE4031 datasheet specifications and drawing with dimensions are shown below in this PDF. Pasternack's broad catalog of RF, microwave and millimeter wave connectors allows designers to configure and customize their signal connections however they like. Whether the need is to provide an I/O for a board design, or simply create a custom cable assembly configuration, Pasternack has the right connector for the job. Pasternack can also expertly build your custom cable assemblies for you and ship same-day.

Mechanical Specifications

Size

Length	0.705 in [17.91 mm]
Width/Dia.	0.312 in [7.92 mm]
Weight	0.009 lbs [4.08 g]

Material Specifications

Description	Material	Plating
Contact		Gold MIL-G-45204
Insulation	PTFE	
Body	Brass	Nickel QQ-N-290

Click the following link (or enter part number in "SEARCH" on website) to obtain additional part information including price, inventory and certifications: SMA Female Connector Clamp/Solder Attachment for RG55, RG58, RG141, RG142, RG223, RG303, RG400, PE-C195, PE-P195, LMR-195 PE4031

Pasternack Enterprises, Inc. • P.O. Box 16759, Irvine, CA 92623
Phone: (866) 727-8376 or (949) 261-1920 • **Fax:** (949) 261-7451
Sales@Pasternack.com • Techsupport@Pasternack.com

© 2018 Pasternack Enterprises All Rights Reserved

SMA Female Connector Clamp/Solder Attachment for RG55, RG58, RG141, RG142, RG223, RG303, RG400, PE-C195, PE-P195, LMR-195

Environmental Specifications

Compliance Certifications (see product page for current document)

Plotted and Other Data

Notes:

Click the following link (or enter part number in "SEARCH" on website) to obtain additional part information including price, inventory and certifications: SMA Female Connector Clamp/Solder Attachment for RG55, RG58, RG141, RG142, RG223, RG303, RG400, PE-C195, PE-P195, LMR-195 PE4031

Pasternack Enterprises, Inc. • P.O. Box 16759, Irvine, CA 92623
Phone: (866) 727-8376 or (949) 261-1920 • **Fax:** (949) 261-7451
Sales@Pasternack.com • Techsupport@Pasternack.com

© 2018 Pasternack Enterprises All Rights Reserved

SMA Female Connector Clamp/Solder Attachment for RG55, RG58, RG141, RG142, RG223, RG303, RG400, PE-C195, PE-P195, LMR-195

Assembly Instruction

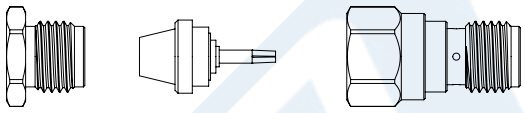

CABLE ASSEMBLY INSTRUCTIONS.

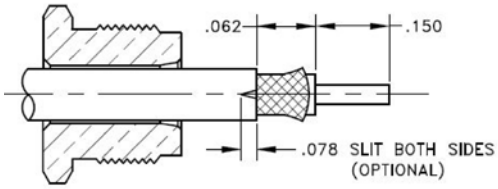

1. SLIDE NUT ONTO CABLE AS SHOWN. CUT CABLE SQUARE. TRIM CABLE TO DIMENSIONS SHOWN BEING CAREFUL NOT TO NICK THE BRAID OR CENTER CONDUCTOR. ROTATE DIELECTRIC TO FLARE BRAID.

   NOTE: TWO SLITS IN THE JACKET 180° APART AS SHOWN MAY BE NEEDED TO PRESS JACKET TO SHOULDER.

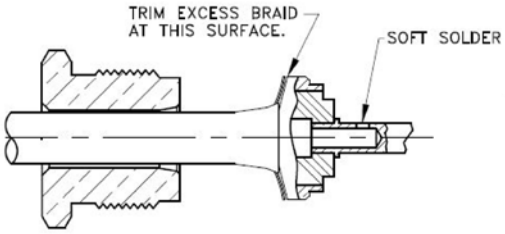

2. SLIDE CLAMP ASSY OVER DIELECTRIC AND UNDER BRAID UNTIL THE DIELECTRIC BOTTOMS OUT IN CLAMP AND THE CENTER CONDUCTOR IS VISIBLE INSIDE HOLE OF CONTACT. SOLDER THE CONTACT ONTO THE CENTER CONDUCTOR. DO NOT OVERHEAT!.

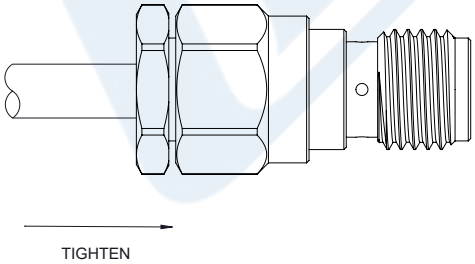

3. INSERT THE ASSEMBLY INTO THE REAR BODY. HOLD THE NUT STATIONARY AND TIGHTEN THE BODY TO 15 IN LBS.

Click the following link (or enter part number in "SEARCH" on website) to obtain additional part information including price, inventory and certifications: SMA Female Connector Clamp/Solder Attachment for RG55, RG58, RG141, RG142, RG223, RG303, RG400, PE-C195, PE-P195, LMR-195 PE4031

Pasternack Enterprises, Inc. • P.O. Box 16759, Irvine, CA 92623
Phone: (866) 727-8376 or (949) 261-1920 • **Fax:** (949) 261-7451
Sales@Pasternack.com • Techsupport@Pasternack.com

© 2018 Pasternack Enterprises All Rights Reserved

SMA Female Connector Clamp/Solder Attachment for RG55, RG58, RG141, RG142, RG223, RG303, RG400, PE-C195, PE-P195, LMR-195

RF Connectors
Technical Data Sheet

PE4031

SMA Female Connector Clamp/Solder Attachment for RG55, RG58, RG141, RG142, RG223, RG303, RG400, PE-C195, PE-P195, LMR-195 from Pasternack Enterprises has same day shipment for domestic and International orders. Our RF, microwave and millimeter wave products maintain a 99.4% availability and are part of the broadest selection in the industry.

Click the following link (or enter part number in “SEARCH” on website) to obtain additional part information including price, inventory and certifications: SMA Female Connector Clamp/Solder Attachment for RG55, RG58, RG141, RG142, RG223, RG303, RG400, PE-C195, PE-P195, LMR-195 PE4031

URL: https://www.pasternack.com/sma-female-standard-rg58-rg55-rg142-rg223-rg400-connector-pe4031-p.aspx

The information contained in this document is accurate to the best of our knowledge and representative of the part described herein. It may be necessary to make modifications to the part and/or the documentation of the part, in order to implement improvements. Pasternack reserves the right to make such changes as required. Unless otherwise stated, all specifications are nominal. Pasternack does not make any representation or warranty regarding the suitability of the part described herein for any particular purpose, and Pasternack does not assume any liability arising out of the use of any part or documentation.

Pasternack Enterprises, Inc. • P.O. Box 16759, Irvine, CA 92623
Phone: (866) 727-8376 or (949) 261-1920 • **Fax:** (949) 261-7451
Sales@Pasternack.com • Techsupport@Pasternack.com

© 2018 Pasternack Enterprises All Rights Reserved

PE4031 CAD Drawing

SMA Female Connector Clamp/Solder Attachment for RG55, RG58, RG141, RG142, RG223, RG303, RG400, PE-C195, PE-P195, LMR-195

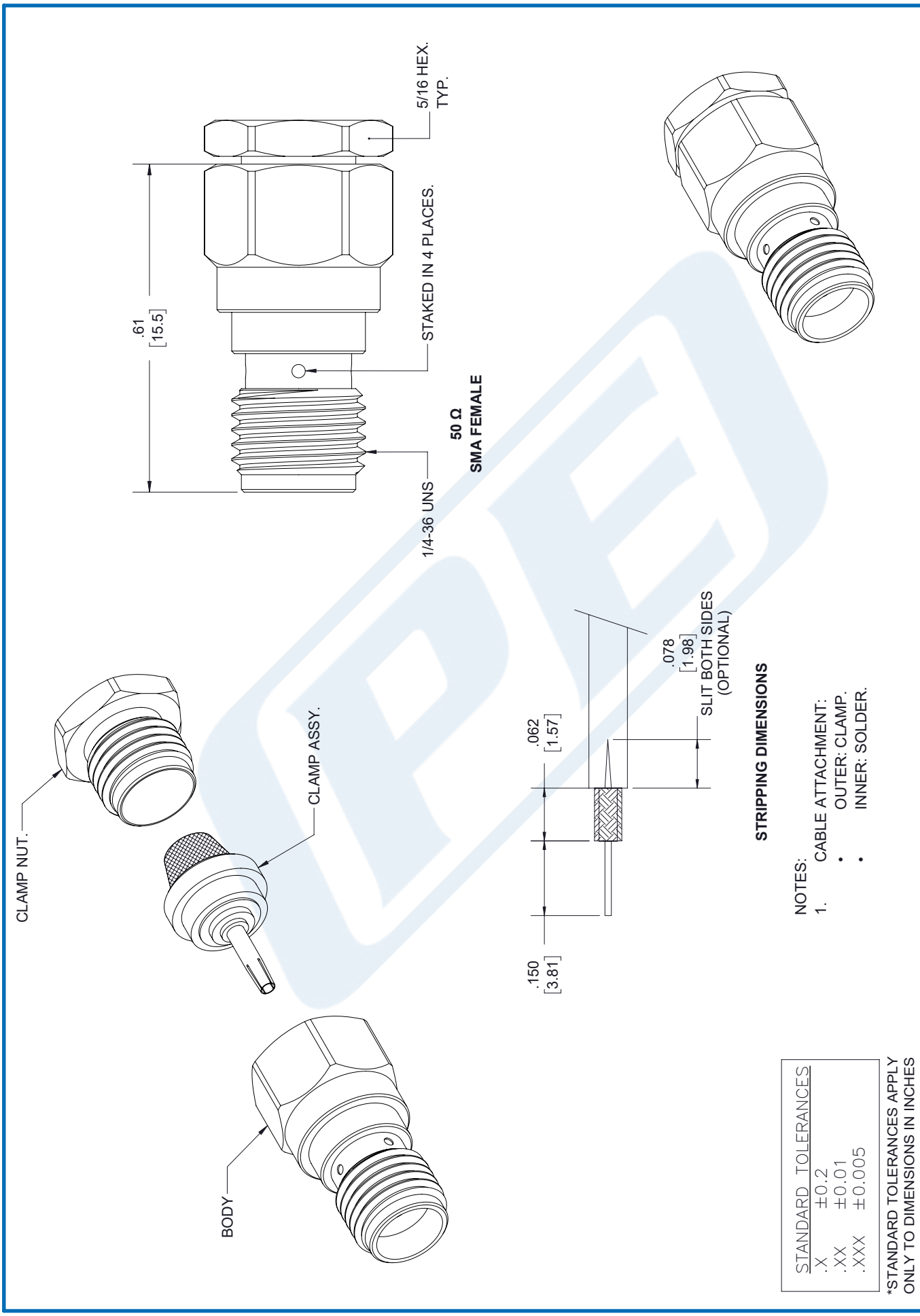

© 2018 Pasternack Enterprises All Rights Reserved

PASTERNACK®
THE ENGINEER'S RF SOURCE

FME Jack Connector Crimp/Solder Attachment for RG58, RG303, RG141, PE-C195, PE-P195, LMR-195, 0.195 inch

Configuration

- FME Jack Connector
- 50 Ohms
- Straight Body Geometry
- RG58, RG303, RG141, PE-C195, PE-P195, LMR-195, 0.195 inch Interface Type
- Crimp/Solder Attachment

Features

- Gold Plated Brass Contact

Applications

- General Purpose Test
- Custom Cable Assemblies

Description

Pasternack's PE44146 FME jack connector with crimp/solder attachment for RG58, RG303, RG141, PE-C195, PE-P195, LMR-195 and 0.195 inch is part of our full line of RF components available for same-day shipping.

Our FME jack connector PE44146 datasheet specifications and drawing with dimensions are shown below in this PDF. Pasternack's broad catalog of RF, microwave and millimeter wave connectors allows designers to configure and customize their signal connections however they like. Whether the need is to provide an I/O for a board design, or simply create a custom cable assembly configuration, Pasternack has the right connector for the job. Pasternack can also expertly build your custom cable assemblies for you and ship same-day.

Mechanical Specifications

Size

Length	1.268 in [32.21 mm]
Width/Dia.	0.315 in [8.00 mm]
Weight	0.014 lbs [6.35 g]

Material Specifications

Description	Material	Plating
Contact	Brass	Gold
Insulation	PTFE	
Body	Brass	Nickel

Click the following link (or enter part number in "SEARCH" on website) to obtain additional part information including price, inventory and certifications: FME Jack Connector Crimp/Solder Attachment for RG58, RG303, RG141, PE-C195, PE-P195, LMR-195, 0.195 inch PE44146

Pasternack Enterprises, Inc. • P.O. Box 16759, Irvine, CA 92623
Phone: (866) 727-8376 or (949) 261-1920 • **Fax:** (949) 261-7451
Sales@Pasternack.com • Techsupport@Pasternack.com

© 2016 Pasternack Enterprises All Rights Reserved

FME Jack Connector Crimp/Solder Attachment for RG58, RG303, RG141, PE-C195, PE-P195, LMR-195, 0.195 inch

Compliance Certifications (see product page for current document)

Plotted and Other Data

Notes:

FME Jack Connector Crimp/Solder Attachment for RG58, RG303, RG141, PE-C195, PE-P195, LMR-195, 0.195 inch from Pasternack Enterprises has same day shipment for domestic and International orders. Our RF, microwave and millimeter wave products maintain a 99% availability and are part of the broadest selection in the industry.

Click the following link (or enter part number in "SEARCH" on website) to obtain additional part information including price, inventory and certifications: FME Jack Connector Crimp/Solder Attachment for RG58, RG303, RG141, PE-C195, PE-P195, LMR-195, 0.195 inch PE44146

URL: https://www.pasternack.com/fme-jack-standard-rg58-connector-pe44146-p.aspx

The information contained in this document is accurate to the best of our knowledge and representative of the part described herein. It may be necessary to make modifications to the part and/or the documentation of the part, in order to implement improvements. Pasternack reserves the right to make such changes as required. Unless otherwise stated, all specifications are nominal. Pasternack does not make any representation or warranty regarding the suitability of the part described herein for any particular purpose, and Pasternack does not assume any liability arising out of the use of any part or documentation.

Pasternack Enterprises, Inc. • P.O. Box 16759, Irvine, CA 92623
Phone: (866) 727-8376 or (949) 261-1920 • **Fax:** (949) 261-7451
Sales@Pasternack.com • Techsupport@Pasternack.com

© 2016 Pasternack Enterprises All Rights Reserved

PE44146 CAD Drawing

FME Jack Connector Crimp/Solder Attachment for RG58, RG303, RG141, PE-C195, PE-P195, LMR-195, 0.195 inch

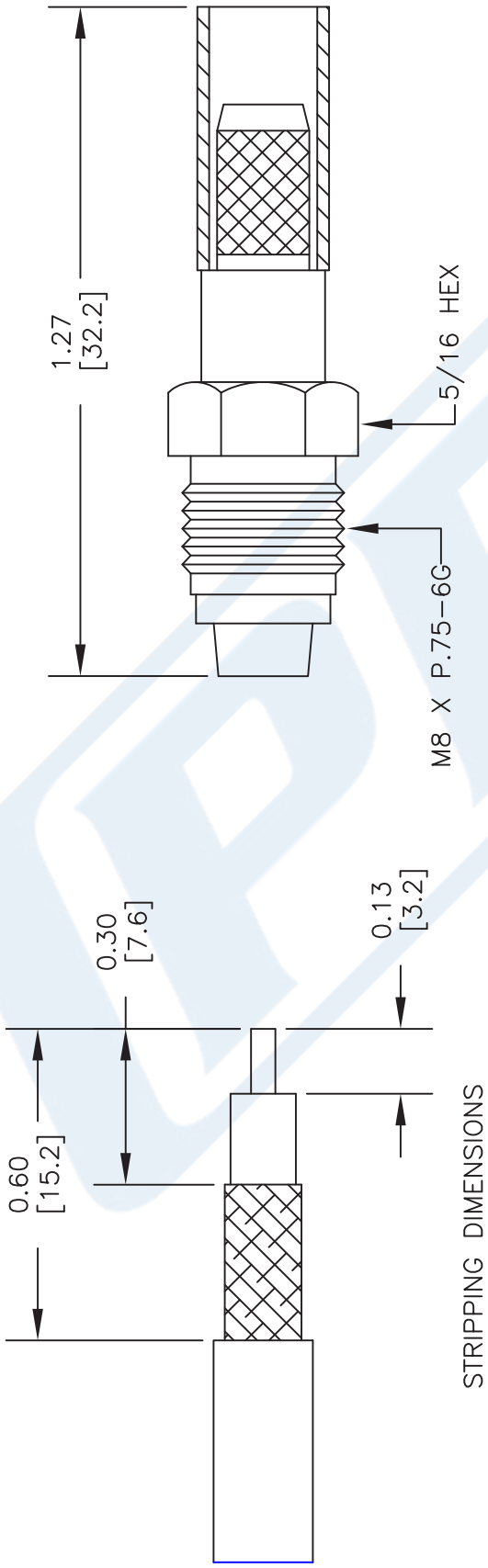

CRIMP SIZE REQUIRED

CONTACT: SOLDER
FERRULE: .213" HEX CRIMP TOOL

NOTES:
1. UNLESS OTHERWISE SPECIFIED ALL DIMENSIONS ARE NOMINAL.
2. ALL SPECIFICATIONS ARE SUBJECT TO CHANGE WITHOUT NOTICE AT ANY TIME.
3. DIMENSIONS ARE IN INCHES [mm].
4. FITS MIL-C-17 AND EQUIVALENT CABLES.

DWG TITLE
PE44146

FSCM NO. 53919

CAD FILE 062702 | SCALE N/A | SIZE A | 2233

PASTERNACK®
Pasternack Enterprises, Inc.
P.O. Box 16759 | Irvine | CA | 92623
Phone: (949) 261-1920 | **Fax:** (949) 261-7451
Website: www.pasternack.com | **E-Mail:** sales@pasternack.com

© 2016 Pasternack Enterprises All Rights Reserved

Low Loss Flexible LMR-195 Outdoor Rated Coax Cable Double Shielded with Black PE Jacket

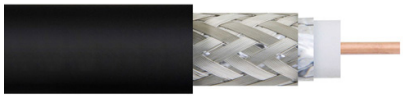

LMR-195

TIMES MICROWAVE SYSTEMS

Times Microwave Systems Connector Specification

Configuration

- Low Loss, Outdoor Flexible Cable
- 2 Shield(s)

Features

- Max Operating Frequency of 8 GHz
- Low Loss Cable
- Phase Velocity 80% VoP

Applications

- Laboratory Applications
- General Purpose RF Interconnect

Description

LMR-195 part number from Pasternack is a LMR-195 coax cable that is flexible. Pasternack LMR-195 flexible coax cable is 50 Ohm and has a PE (F) dielectric. Our LMR-195 coax is constructed with a 0.195 jacket made of PE. LMR-195 coax has a shield count of 2, a RF shielding of 90 dB and the maximum frequency for this Pasternack cable is 8 GHz. LMR-195 coax cable has an attenuation at 1 GHz of 11.8 dB.

Pasternack LMR-195 coax cables are part of over 40,000 RF, microwave and millimeter wave components. LMR-195 cables and our other RF parts are available for same day shipping worldwide. Custom RF cable assemblies using LMR-195 or other coax can be built and shipped same day as well.

Electrical Specifications

Description	Minimum	Typical	Maximum	Units
Frequency Range	DC		8	GHz
Cutoff Frequency		41		GHz
Impedance		50		Ohms
Velocity of Propagation		80		%
Time Delay		1.27 [4.17]		ns/ft [ns/m]
Shielding Effectiveness	90			dB
Dielectric Withstanding Voltage (DC)			1,000	Vdc
Jacket Spark			3,000	Vrms
Inner Conductor DC Resistance			7.6	Ohms/1000ft
Outer Conductor DC Resistance			4.9	Ohms/1000ft
Nominal Capacitance		25.4 [83.33]		pF/ft [pF/m]
Nominal Inductance		0.064 [0.21]		uH/ft [uH/m]
Input Power (Peak)			2.5	kWatts

© 2023 Infinite Electronics, Inc. Pasternack is a registered trademark of Infinite Electronics, Inc.
+1 (866) 558-2786 | sales@pasternack.com | pasternack.com

Low Loss Flexible LMR-195 Outdoor Rated Coax Cable Double Shielded with Black PE Jacket

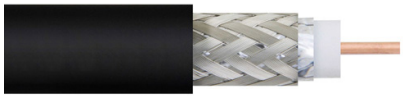

LMR-195

Performance by Frequency Band

Description	F1	F2	F3	F4	F5	Units
Frequency	50	150	220	450	900	MHz
Attenuation, Typ	2.5	4.4	5.4	7.8	11.1	dB/100ft
	8.2	14.44	17.72	25.59	36.42	dB/100m
Input Power (CW), Max	680	390	320	220	160	Watts

Description	F6	F7	F8	F9	F10	Units
Frequency	1.5	1.8	2	2.5	8	GHz
Attenuation, Typ	14.5	16	16.9	19	29.9	dB/100ft
	47.57	52.49	55.45	62.34	98.1	dB/100m
Input Power (CW), Max	120	110	100	90	60	Watts

Mechanical Specifications

Diameter	0.195 in [4.95 mm}
Weight	0.022 lbs/ft [0.03 kg/m]
Min. Bend Radius (Installation)	0.5 in [12.7 mm]
Min. Bend Radius (Repeated)	2 in [50.8 mm]
Bending Moment	0.2 lbs-ft [0.27 N-m]
Tensile Strength	40 lbs [18.14 kg]
Flat Plate Crush	15 lbs/in [0.27 kg/mm]

Construction Specifications

Description	Material and Plating	Diameter
Inner Conductor	Copper, 1 Strand	0.037 in [0.94 mm]
Conductor Type	Solid	
Dielectric	PE (F)	0.11 in [2.79 mm]
First Shield	Aluminum Tape	
Second Shield	Tinned Copper Braid	
Jacket	PE, Black	0.195 in [4.95 mm]

Environmental Specifications

Temperature

Operating Range	-40 to +85 deg C
Storage Range	-70 to +85 deg C

Compliance Certifications (see product page for current document)

Plotted and Other Data

Notes:

© 2023 Infinite Electronics, Inc. Pasternack is a registered trademark of Infinite Electronics, Inc.
+1 (866) 558-2786 | sales@pasternack.com | pasternack.com

Low Loss Flexible LMR-195 Outdoor Rated Coax Cable Double Shielded with Black PE Jacket

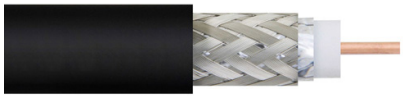

LMR-195

Low Loss Flexible LMR-195 Outdoor Rated Coax Cable Double Shielded with Black PE Jacket from Pasternack Enterprises has same day shipment for domestic and International orders. Our RF, microwave and millimeter wave products maintain a 99.4% availability and are part of the broadest selection in the industry.

Click the following link (or enter part number in "SEARCH" on website) to obtain additional part information including price, inventory and certifications: Low Loss Flexible LMR-195 Outdoor Rated Coax Cable Double Shielded with Black PE Jacket LMR-195

URL: https://www.pasternack.com/50-ohm-low-loss-flexible-lmr195-pe-jacket-double-shielded-black-lmr-195-p.aspx

The information contained within this document is accurate to the best of our knowledge and representative of the part described herein. It may be necessary to make modifications to the part and/or the documentation of the part in order to impliment improvements. Pasternack Enterprises reserves the right to make such changes as required. Unless otherwise stated, all specifications are nominal. Pasternack Enterprises does not make any representation or warranty regarding the suitability of the part described herein for any particular purpose, and Pasternack Enterprises does not assume liability arising out of the use of any part or document.

© 2023 Infinite Electronics, Inc. Pasternack is a registered trademark of Infinite Electronics, Inc.

LMR-195 CAD Drawing

Low Loss Flexible LMR-195 Outdoor Rated Coax Cable Double Shielded with Black PE Jacket

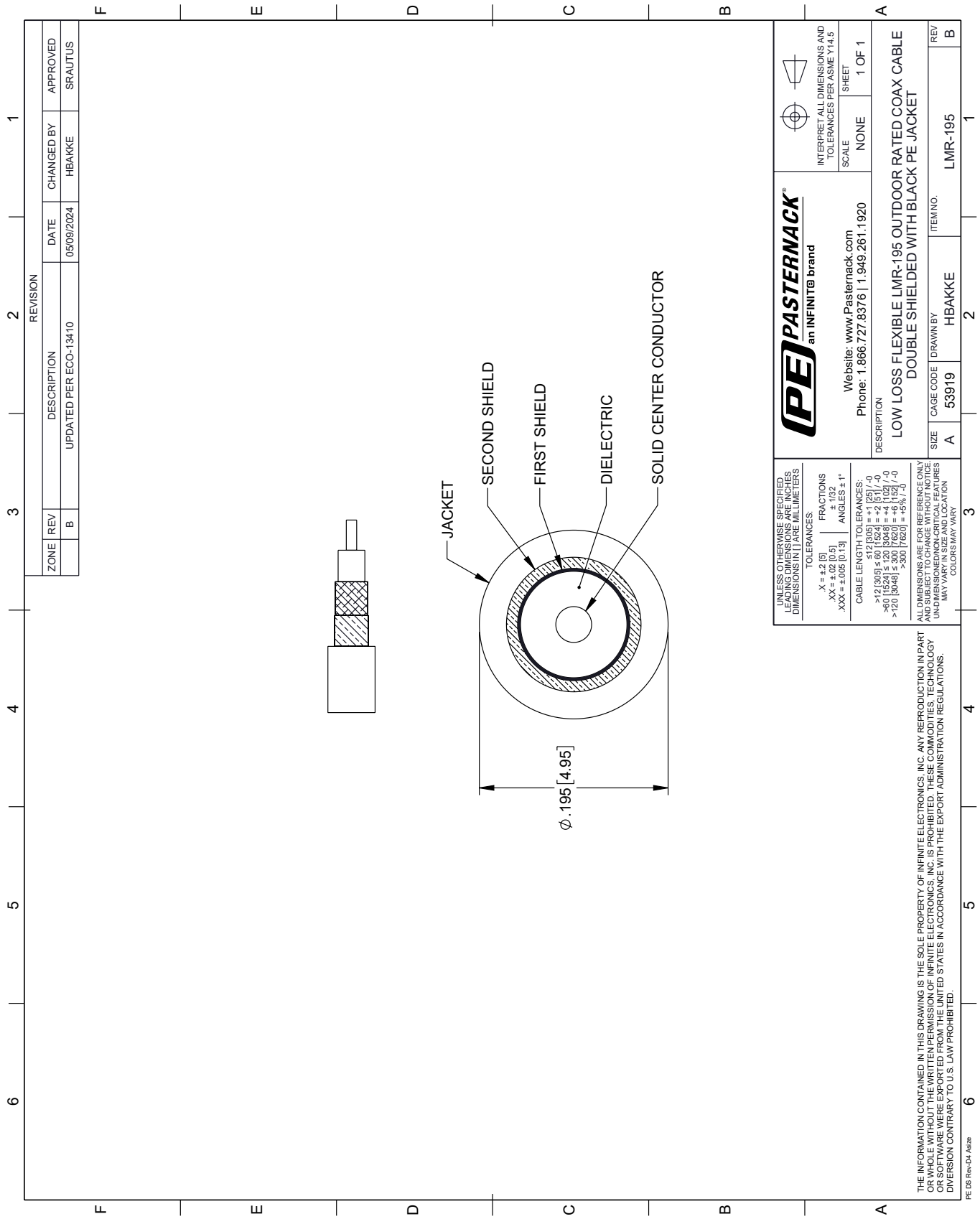

© 2023 Infinite Electronics, Inc. Pasternack is a registered trademark of Infinite Electronics, Inc.