PASTERNACK
an INFINITE brand

MMCX Plug Connector Crimp/Solder Attachment for RG174, RG316, RG188, LMR-100, PE-B100, PE-C100, 0.100 inch

RF Connectors
Technical Data Sheet

PE4896

Configuration

- MMCX Plug Connector
- BS EN 122340
- 50 Ohms
- Straight Body Geometry
- Connector Interface Types: RG174, RG316, RG188, LMR-100, PE-B100, PE-C100, .100 inch

Features

- Max. Operating Frequency 6 GHz
- Excellent VSWR of 1.22:1
- Gold Plated Brass Contact
- 30 µin minimum contact plating

Applications

- General Purpose Test
- Custom Cable Assemblies

Description

Pasternack's PE4896 MMCX plug connector with crimp/solder attachment for RG174, RG316, RG188, LMR-100, PE-B100, PE-C100 and .100 inch is part of our full line of RF components available for same-day shipping. Our MMCX plug connector operates up to a maximum frequency of 6 GHz and offers excellent VSWR of 1.22:1.

Our MMCX plug connector PE4896 datasheet specifications and drawing with dimensions are shown below in this PDF. Pasternack's broad catalog of RF, microwave and millimeter wave connectors allows designers to configure and customize their signal connections however they like. Whether the need is to provide an I/O for a board design, or simply create a custom cable assembly configuration, Pasternack has the right connector for the job. Pasternack can also expertly build your custom cable assemblies for you and ship same-day.

Electrical Specifications

Description	Minimum	Typical	Maximum	Units
Frequency Range	DC		6	GHz
VSWR			1.22:1	
Operating Voltage (AC)			250	Vrms

Mechanical Specifications

Size

Length	0.575 in [14.61 mm]
Width/Dia.	0.177 in [4.50 mm]
Weight	0.007 lbs [3.18 g]

Click the following link (or enter part number in "SEARCH" on website) to obtain additional part information including price, inventory and certifications: MMCX Plug Connector Crimp/Solder Attachment for RG174, RG316, RG188, LMR-100, PE-B100, PE-C100, 0.100 inch PE4896

Pasternack Enterprises, Inc. • P.O. Box 16759, Irvine, CA 92623
Phone: (866) 727-8376 or (949) 261-1920 • **Fax:** (949) 261-7451
Sales@Pasternack.com • Techsupport@Pasternack.com

© 2020 Pasternack Enterprises All Rights Reserved

MMCX Plug Connector Crimp/Solder Attachment for RG174, RG316, RG188, LMR-100, PE-B100, PE-C100, 0.100 inch

Material Specifications

Description	Material	Plating
Contact	Brass	Gold 30 µin minimum
Insulation	PTFE	
Outer Conductor	Brass	Gold 3 µin minimum
Body	Brass	Gold 3 µin minimum
Crimp Sleeve	Brass	Gold

Environmental Specifications

Temperature

Operating Range -55 to +155 deg C

Compliance Certifications (see product page for current document)

Plotted and Other Data

Notes:

MMCX Plug Connector Crimp/Solder Attachment for RG174, RG316, RG188, LMR-100, PE-B100, PE-C100, 0.100 inch from Pasternack Enterprises has same day shipment for domestic and International orders. Our RF, microwave and millimeter wave products maintain a 99.4% availability and are part of the broadest selection in the industry.

Click the following link (or enter part number in “SEARCH” on website) to obtain additional part information including price, inventory and certifications: MMCX Plug Connector Crimp/Solder Attachment for RG174, RG316, RG188, LMR-100, PE-B100, PE-C100, 0.100 inch PE4896

URL: https://www.pasternack.com/mmcx-plug-rg174-rg316-rg188-lmr-100-pe-b100-pe-c100-0.100-connector-pe4896-p.aspx

The information contained in this document is accurate to the best of our knowledge and representative of the part described herein. It may be necessary to make modifications to the part and/or the documentation of the part, in order to implement improvements. Pasternack reserves the right to make such changes as required. Unless otherwise stated, all specifications are nominal. Pasternack does not make any representation or warranty regarding the suitability of the part described herein for any particular purpose, and Pasternack does not assume any liability arising out of the use of any part or documentation.

Pasternack Enterprises, Inc. • P.O. Box 16759, Irvine, CA 92623
Phone: (866) 727-8376 or (949) 261-1920 • **Fax:** (949) 261-7451
Sales@Pasternack.com • Techsupport@Pasternack.com

© 2020 Pasternack Enterprises All Rights Reserved

PE4896 CAD Drawing

MMCX Plug Connector Crimp/Solder Attachment for RG174, RG316, RG188, LMR-100, PE-B100, PE-C100, 0.100 inch

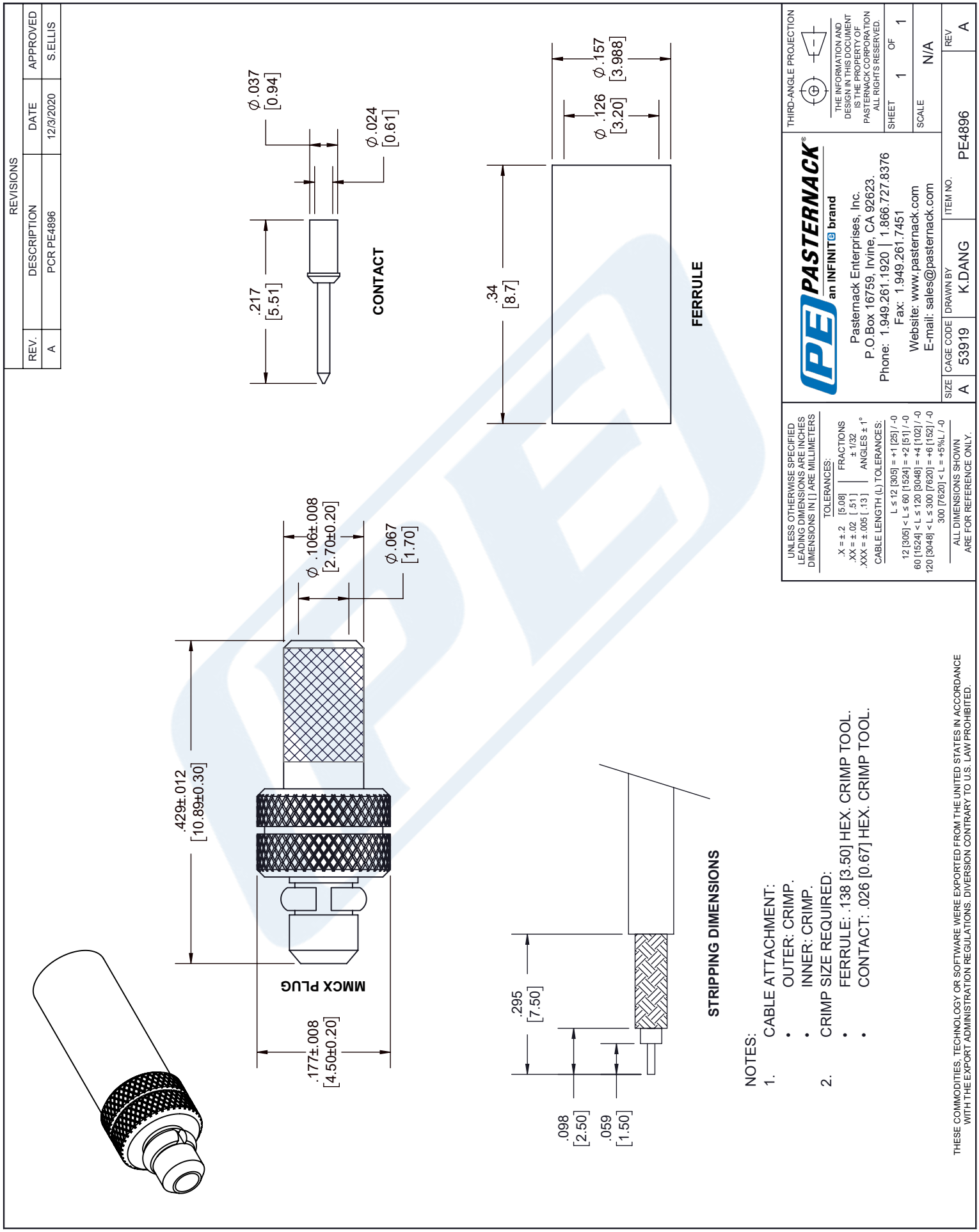

PASTERNACK
an INFINITE brand

SSMC Plug Connector Crimp/Solder Attachment for RG316, RG174, RG188

RF Connectors
Technical Data Sheet

PE45209

Configuration

- SSMC Plug Connector
- 50 Ohms
- Straight Body Geometry
- Connector Interface Types: RG316, RG174, RG188
- 5/32 inch Hex

Features

- Max. Operating Frequency 12.4 GHz
- Good VSWR of 1.5:1
- Gold Plated Beryllium Copper Contact

Applications

- General Purpose Test
- Custom Cable Assemblies

Description

Pasternack's PE45209 SSMC plug connector with crimp/solder attachment for RG316, RG174 and RG188 is part of our full line of RF components available for same-day shipping. Our SSMC plug connector operates up to a maximum frequency of 12.4 GHz and offers good VSWR of 1.5:1.

Our SSMC plug connector PE45209 datasheet specifications and drawing with dimensions are shown below in this PDF. Pasternack's broad catalog of RF, microwave and millimeter wave connectors allows designers to configure and customize their signal connections however they like. Whether the need is to provide an I/O for a board design, or simply create a custom cable assembly configuration, Pasternack has the right connector for the job. Pasternack can also expertly build your custom cable assemblies for you and ship same-day.

Electrical Specifications

Description	Minimum	Typical	Maximum	Units
Frequency Range	DC		12.4	GHz
VSWR			1.5:1	
Insulation Resistance	1,000			MOhms

Mechanical Specifications

Size	
Length	0.94 in [23.88 mm]
Width/Dia.	0.156 in [3.96 mm]
Weight	0.0033 lbs [1.5 g]
Mating Cycles	500 Cycles
Mating Torque	1 in-lbs [0.11 Nm]

Click the following link (or enter part number in "SEARCH" on website) to obtain additional part information including price, inventory and certifications: SSMC Plug Connector Crimp/Solder Attachment for RG316, RG174, RG188 PE45209

Pasternack Enterprises, Inc. • P.O. Box 16759, Irvine, CA 92623
Phone: (866) 727-8376 or (949) 261-1920 • **Fax:** (949) 261-7451
Sales@Pasternack.com • Techsupport@Pasternack.com

© 2019 Pasternack Enterprises All Rights Reserved

SSMC Plug Connector Crimp/Solder Attachment for RG316, RG174, RG188

Material Specifications

Description	Material	Plating
Contact	Beryllium Copper	Gold
Insulation	PTFE	
Body	Beryllium Copper	Gold
Coupling Nut	Beryllium Copper	Gold

Environmental Specifications

Temperature

Operating Range -45 to +120 deg C

Compliance Certifications (see product page for current document)

Plotted and Other Data

Notes:

SSMC Plug Connector Crimp/Solder Attachment for RG316, RG174, RG188 from Pasternack Enterprises has same day shipment for domestic and International orders. Our RF, microwave and millimeter wave products maintain a 99.4% availability and are part of the broadest selection in the industry.

Click the following link (or enter part number in “SEARCH” on website) to obtain additional part information including price, inventory and certifications: SSMC Plug Connector Crimp/Solder Attachment for RG316, RG174, RG188 PE45209

URL: https://www.pasternack.com/ssmc-male-rg316-rg174-rg188-connector-pe45209-p.aspx

The information contained in this document is accurate to the best of our knowledge and representative of the part described herein. It may be necessary to make modifications to the part and/or the documentation of the part, in order to implement improvements. Pasternack reserves the right to make such changes as required. Unless otherwise stated, all specifications are nominal. Pasternack does not make any representation or warranty regarding the suitability of the part described herein for any particular purpose, and Pasternack does not assume any liability arising out of the use of any part or documentation.

Pasternack Enterprises, Inc. • P.O. Box 16759, Irvine, CA 92623
Phone: (866) 727-8376 or (949) 261-1920 • **Fax:** (949) 261-7451
Sales@Pasternack.com • Techsupport@Pasternack.com

© 2019 Pasternack Enterprises All Rights Reserved

PE45209 CAD Drawing

SSMC Plug Connector Crimp/Solder Attachment for RG316, RG174, RG188

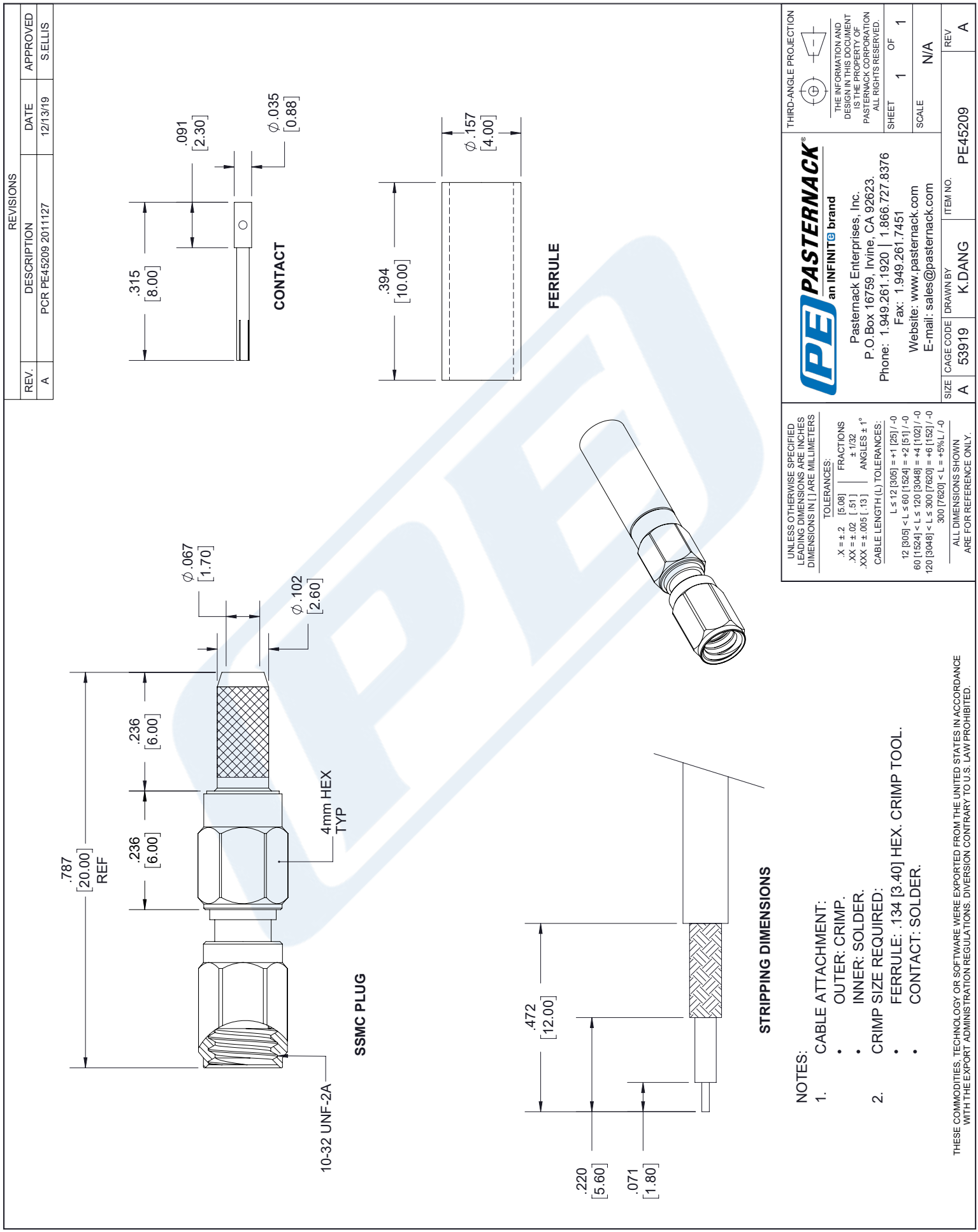

PASTERNACK
an INFINITE brand

Flexible RG174 Coax Cable Single Shielded with Black PVC Jacket

RF Cables
Technical Data Sheet

TIMES MICROWAVE SYSTEMS An Amphenol Company

RG174A/U

Times Microwave Systems Coax Cable Specification

Configuration

- Flexible Cable
- 1 Shield(s)

Electrical Specifications

Description	Minimum	Typical	Maximum	Units
Frequency Range	DC		1,000	MHz
Impedance		50		Ohms
Velocity of Propagation		66		%
Nominal Capacitance		31.08 [101.97]		pF/ft [pF/m]
Power@ 1GHz			17	Watts

Performance by Frequency Band

Description	F1	F2	F3	F4	F5	Units
Frequency	100	400	1,000			MHz
Attenuation, Typ	8.4	19	32			dB/100ft
	27.56	62.34	104.99			dB/100m

Mechanical Specifications

Diameter	0.11 in [2.79 mm}
Weight	0.009 lbs/ft [0.01 kg/m]

Construction Specifications

Description	Material and Plating	Diameter
Inner Conductor	Copper Clad Steel, 7 Strands	0.019 in [0.48 mm]
Conductor Type	Stranded	
Dielectric	PE	0.06 in [1.52 mm]
First Shield	Tinned Copper Braid	0.078 in [1.98 mm]

Click the following link (or enter part number in “SEARCH” on website) to obtain additional part information including price, inventory and certifications: Flexible RG174 Coax Cable Single Shielded with Black PVC Jacket RG174A/U

Pasternack Enterprises, Inc. • P.O. Box 16759, Irvine, CA 92623
Phone: (866) 727-8376 or (949) 261-1920 • **Fax:** (949) 261-7451
Sales@Pasternack.com • Techsupport@Pasternack.com

© 2020 Pasternack Enterprises All Rights Reserved

Flexible RG174 Coax Cable Single Shielded with Black PVC Jacket

Jacket	PVC, Black	0.11 in [2.79 mm]

Environmental Specifications

Temperature

Operating Range	-40 to +80 deg C

Compliance Certifications (see product page for current document)

Plotted and Other Data

Notes:

Flexible RG174 Coax Cable Single Shielded with Black PVC Jacket from Pasternack Enterprises has same day shipment for domestic and International orders. Our RF, microwave and millimeter wave products maintain a 99.4% availability and are part of the broadest selection in the industry.

Click the following link (or enter part number in “SEARCH” on website) to obtain additional part information including price, inventory and certifications: Flexible RG174 Coax Cable Single Shielded with Black PVC Jacket RG174A/U

URL: https://www.pasternack.com/flexible-0.100-rg174-50-ohm-coax-cable-pvc-jacket-rg174a-u-p.aspx

The information contained in this document is accurate to the best of our knowledge and representative of the part described herein. It may be necessary to make modifications to the part and/or the documentation of the part, in order to implement improvements. Pasternack reserves the right to make such changes as required. Unless otherwise stated, all specifications are nominal. Pasternack does not make any representation or warranty regarding the suitability of the part described herein for any particular purpose, and Pasternack does not assume any liability arising out of the use of any part or documentation.

Pasternack Enterprises, Inc. • P.O. Box 16759, Irvine, CA 92623
Phone: (866) 727-8376 or (949) 261-1920 • **Fax:** (949) 261-7451
Sales@Pasternack.com • Techsupport@Pasternack.com

© 2020 Pasternack Enterprises All Rights Reserved

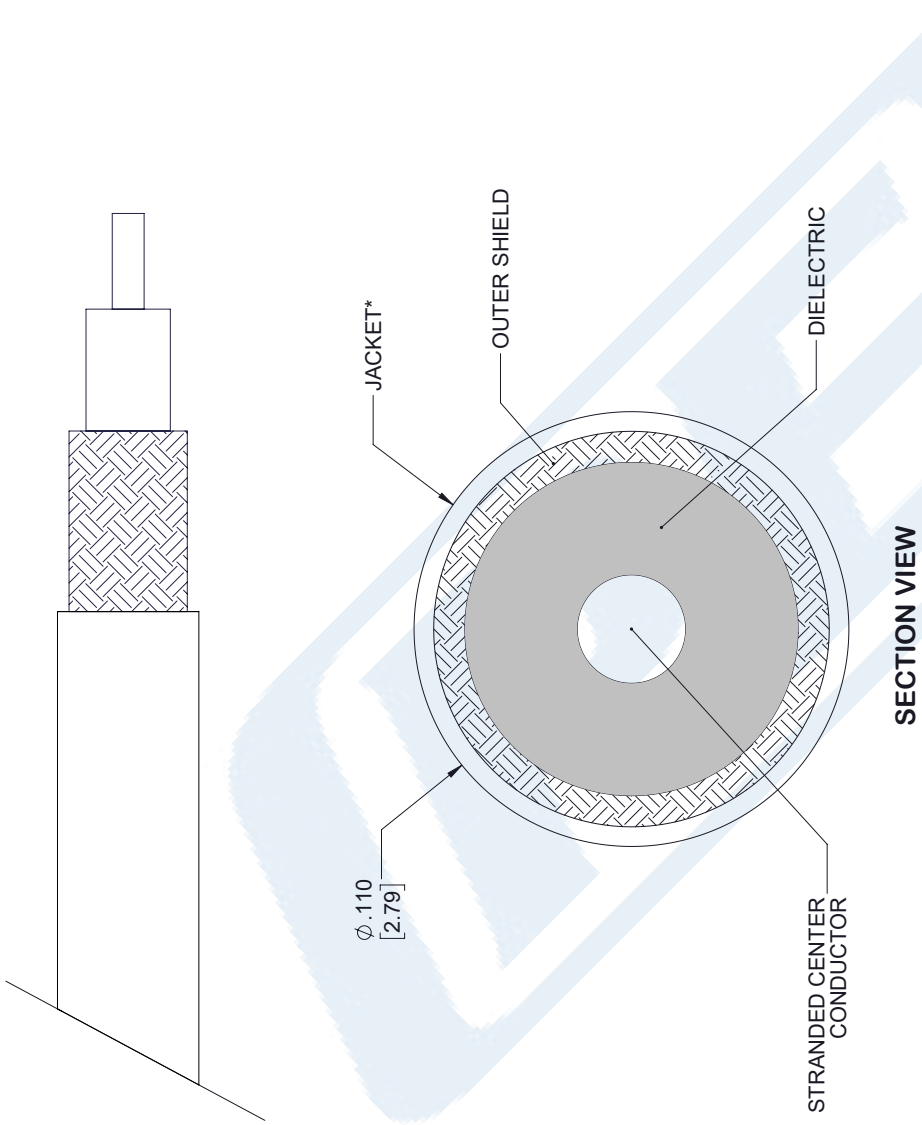

NOTE:
*STANDARD TOLERANCES APPLY ONLY TO DIMENSIONS IN INCHES

STANDARD TOLERANCES	
.X	±0.2
.XX	±0.01
.XXX	±0.005

NOTES:
1. UNLESS OTHERWISE SPECIFIED ALL DIMENSIONS ARE NOMINAL.
2. ALL SPECIFICATIONS ARE SUBJECT TO CHANGE WITHOUT NOTICE AT ANY TIME
3. DIMENSIONS ARE IN INCHES [mm].

DWG TITLE RG174A/U

CAD FILE 05/25/18 | SCALE N/A | SIZE A | 7361

CAGE CODE 53919

PASTERNACK® THE ENGINEER'S RF SOURCE
Pasternack Enterprises, Inc.
P.O. Box 16759 | Irvine | CA | 92623
Phone: (949) 261-1920 | **Fax:** (949) 261-7451
Website: www.pasternack.com | **E-Mail:** sales@pasternack.com

© 2020 Pasternack Enterprises All Rights Reserved