PASTERNACK®
THE ENGINEER'S RF SOURCE

# QMA Male Connector Crimp/Solder Attachment For RG55, RG142, RG223, RG400

## TECHNICAL DATA SHEET PE44514

### Configuration

| | |
|---|---|
| Connector | QMA Male |
| Connector Interface Type | RG55, RG142, RG223, RG400 |
| Attachment Method (Shield/Contact) | Crimp/Solder |
| Body Style | Straight |

### Electrical Specifications

| | |
|---|---|
| Frequency Range | DC to 6 GHz |
| Impedance | 50 Ohms |
| Maximum VSWR | 1.3:1 |

### Mechanical Specifications

| | |
|---|---|
| Weight | 0.006 lbs [2.72 g] |

**Connector**

| | |
|---|---|
| Type | QMA Male |
| Body Material and Plating | Brass, Nickel |

### Compliance Certifications (visit www.Pasternack.com for current document)

RoHS Compliant

### Plotted and Other Data

Notes:

- Values at +25 °C, sea level

QMA Male Connector Crimp/Solder Attachment For RG55, RG142, RG223, RG400 from Pasternack Enterprises has same day shipment for domestic and International orders. Our RF, microwave and millimeter wave products maintain a 99% availability and are part of the broadest selection in the industry.

Click the following link (or enter part number in "SEARCH" on website) to obtain additional part information including price, inventory and certifications: QMA Male Connector Crimp/Solder Attachment For RG55, RG142, RG223, RG400 PE44514

URL: http://www.pasternack.com/qma-male-straight-18-ghz-solder-crimp-for-rg223-pe44514-p.aspx

The information contained in this document is accurate to the best of our knowledge and representative of the part described herein. It may be necessary to make modifications to the part and/or the documentation of the part, in order to implement improvements. Pasternack reserves the right to make such changes as required. Unless otherwise stated, all specifications are nominal. Pasternack does not make any representation or warranty regarding the suitability of the part described herein for any particular purpose, and Pasternack does not assume any liability arising out of the use of any part or documentation.

Pasternack Enterprises, Inc. • P.O. Box 16759, Irvine, CA 92623
**Phone:** (866) 727-8376 or (949) 261-1920 • **Fax:** (949) 261-7451
Sales@Pasternack.com • Techsupport@Pasternack.com

© 2015 Pasternack Enterprises All Rights Reserved

# PE44514 CAD Drawing

QMA Male Connector Crimp/Solder Attachment For RG55, RG142, RG223, RG400

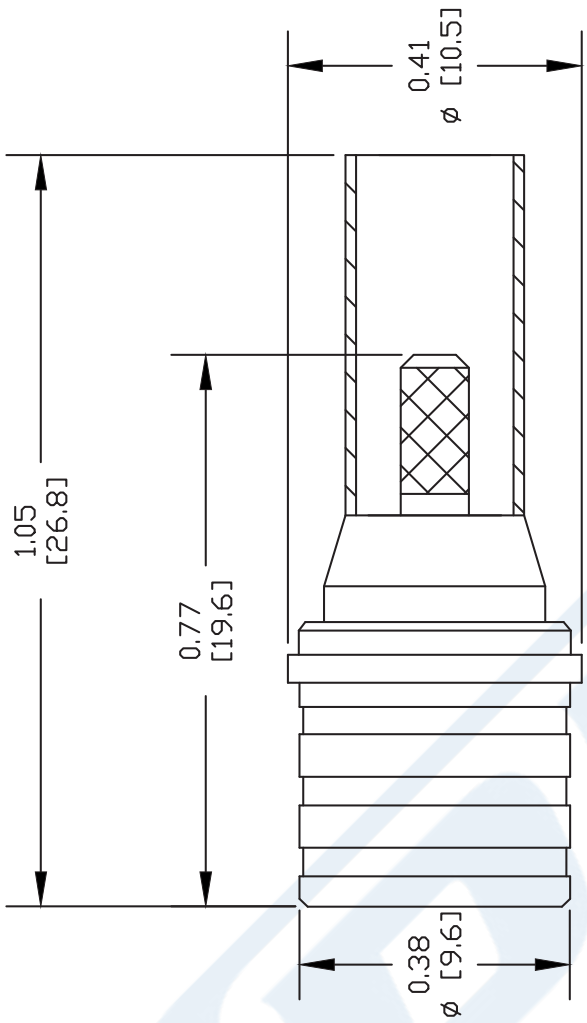


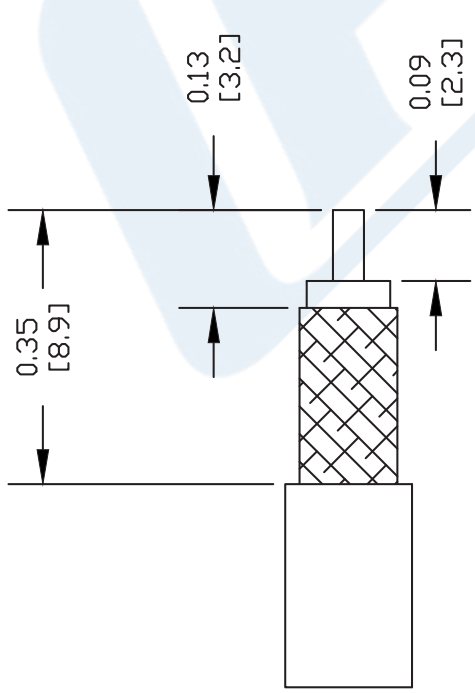


STRIPPING DIMENSIONS

CRIMP SIZE REQUIRED

CONTACT: SOLDER
FERRULE: .213" HEX CRIMP TOOL

NOTES:
1. UNLESS OTHERWISE SPECIFIED ALL DIMENSIONS ARE NOMINAL.
2. ALL SPECIFICATIONS ARE SUBJECT TO CHANGE WITHOUT NOTICE AT ANY TIME.
3. DIMENSIONS ARE IN INCHES [mm].
4. FITS MIL-C-17 AND EQUIVALENT CABLES.

DWG TITLE
PE44514

FSCM NO. 53919

CAD FILE 011011 | SCALE N/A | SIZE A | 127

PASTERNACK®
Pasternack Enterprises, Inc.
P.O. Box 16759 | Irvine | CA | 92623
**Phone:** (949) 261-1920 | **Fax:** (949) 261-7451
**Website:** www.pasternack.com | **E-Mail:** sales@pasternack.com

© 2015 Pasternack Enterprises All Rights Reserved

# QN Male Connector Crimp/Solder Attachment for RG55, RG141, RG142, RG223, RG400

## RF Connectors Technical Data Sheet PE44978

## Configuration

- QN Male Connector
- 50 Ohms
- Straight Body Geometry
- RG55, RG141, RG142, RG223, RG400 Interface Type
- Crimp/Solder Attachment

## Features

- Max. Operating Frequency 6 GHz
- Excellent VSWR of 1.2:1
- Silver Plated Brass Contact

## Applications

- General Purpose Test
- Custom Cable Assemblies

### Description

Pasternack's PE44978 QN male connector with crimp/solder attachment for RG55, RG141, RG142, RG223 and RG400 is part of our full line of RF components available for same-day shipping. Our QN male connector operates up to a maximum frequency of 6 GHz and offers excellent VSWR of 1.2:1.

Our QN male connector PE44978 datasheet specifications and drawing with dimensions are shown below in this PDF. Pasternack's broad catalog of RF, microwave and millimeter wave connectors allows designers to configure and customize their signal connections however they like. Whether the need is to provide an I/O for a board design, or simply create a custom cable assembly configuration, Pasternack has the right connector for the job. Pasternack can also expertly build your custom cable assemblies for you and ship same-day.

### Electrical Specifications

| Description | Minimum | Typical | Maximum | Units |
|---|---|---|---|---|
| Frequency Range | DC | | 6 | GHz |
| VSWR | | | 1.2:1 | |
| Insertion Loss | | | 0.12 | dB |
| Operating Voltage (AC) | | | 850 | Vrms |
| Dielectric Withstanding Voltage (AC) | | | 1,500 | Vrms |
| Insulation Resistance | 5,000 | | | MOhms |

Electrical Specification Notes:
Insertion loss = 0.048 x sqrt(fGHz) dB max.

### Mechanical Specifications

| | |
|---|---|
| **Size** | |
| Length | 1.38 in [35.05 mm] |
| Width/Dia. | 0.75 in [19.05 mm] |
| Weight | 0.038 lbs [17.24 g] |

Click the following link (or enter part number in "SEARCH" on website) to obtain additional part information including price, inventory and certifications: QN Male Connector Crimp/Solder Attachment for RG55, RG141, RG142, RG223, RG400 PE44978

Pasternack Enterprises, Inc. • P.O. Box 16759, Irvine, CA 92623
**Phone:** (866) 727-8376 or (949) 261-1920 • **Fax:** (949) 261-7451
Sales@Pasternack.com • Techsupport@Pasternack.com

© 2016 Pasternack Enterprises All Rights Reserved

# QN Male Connector Crimp/Solder Attachment for RG55, RG141, RG142, RG223, RG400



| | |
|---|---|
| Mating Cycles | 100 Cycles |

**Material Specifications**

| Description | Material | Plating |
|---|---|---|
| Contact | Brass | Silver |
| Insulation | PTFE | |
| Outer Conductor | Beryllium Copper | Nickel |
| Body | Brass | Silver |

## Environmental Specifications

**Temperature**

| | |
|---|---|
| Operating Range | -55 to +125 deg C |

## Compliance Certifications (see product page for current document)

## Plotted and Other Data

Notes:

QN Male Connector Crimp/Solder Attachment for RG55, RG141, RG142, RG223, RG400 from Pasternack Enterprises has same day shipment for domestic and International orders. Our RF, microwave and millimeter wave products maintain a 99% availability and are part of the broadest selection in the industry.

Click the following link (or enter part number in "SEARCH" on website) to obtain additional part information including price, inventory and certifications: QN Male Connector Crimp/Solder Attachment for RG55, RG141, RG142, RG223, RG400 PE44978

URL: https://www.pasternack.com/qn-male-standard-rg55-rg142-rg223-rg400-connector-pe44978-p.aspx

The information contained in this document is accurate to the best of our knowledge and representative of the part described herein. It may be necessary to make modifications to the part and/or the documentation of the part, in order to implement improvements. Pasternack reserves the right to make such changes as required. Unless otherwise stated, all specifications are nominal. Pasternack does not make any representation or warranty regarding the suitability of the part described herein for any particular purpose, and Pasternack does not assume any liability arising out of the use of any part or documentation.

Pasternack Enterprises, Inc. • P.O. Box 16759, Irvine, CA 92623
**Phone:** (866) 727-8376 or (949) 261-1920 • **Fax:** (949) 261-7451
Sales@Pasternack.com • Techsupport@Pasternack.com

© 2016 Pasternack Enterprises All Rights Reserved

# PE44978 CAD Drawing

QN Male Connector Crimp/Solder Attachment for RG55, RG141, RG142, RG223, RG400

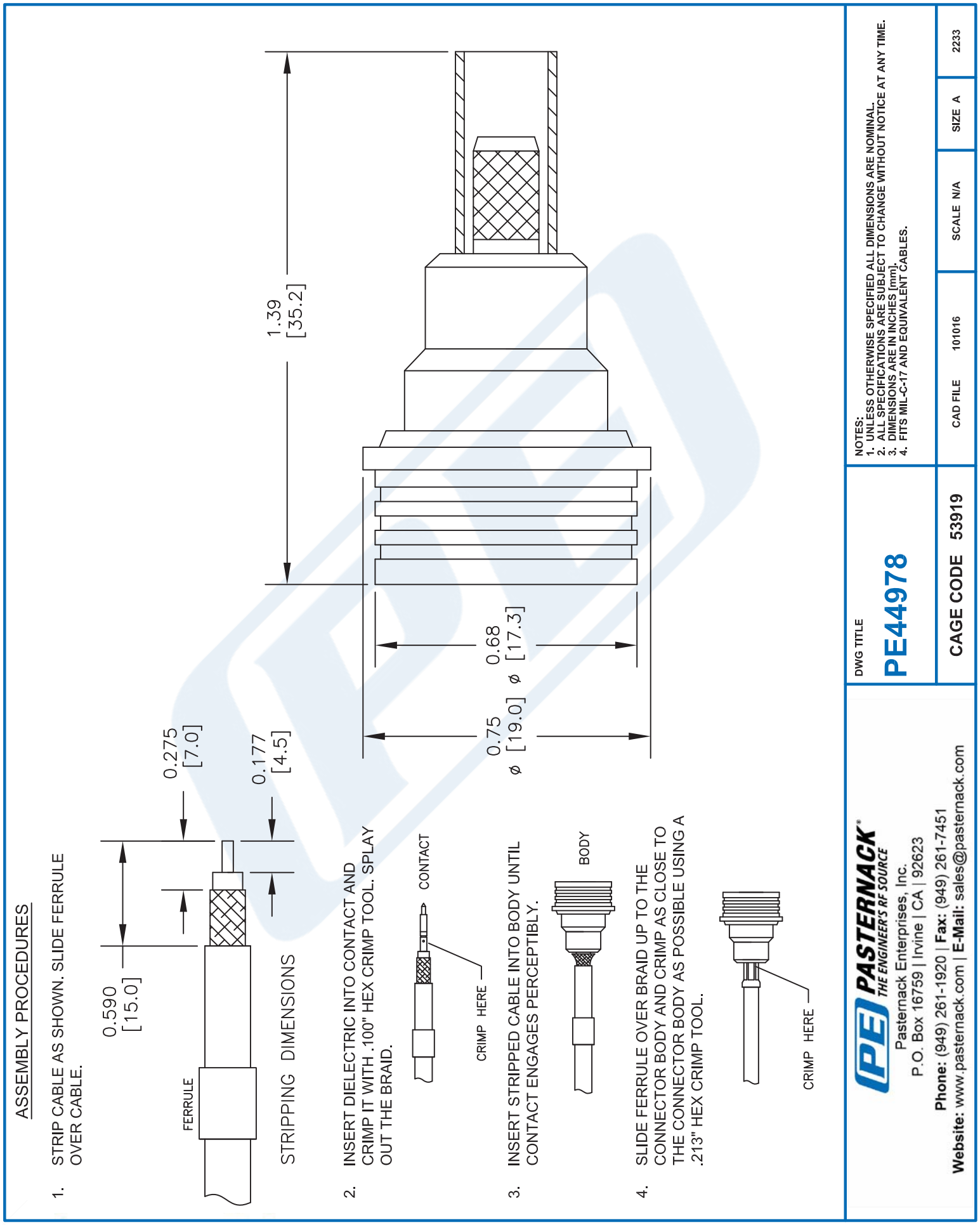


© 2016 Pasternack Enterprises All Rights Reserved

PASTERNACK®
www.pasternack.com

# Flexible RG400 Coax Cable Double Shielded with Tan FEP Jacket

## TECHNICAL DATA SHEET RG400/U

Flexible RG400 Coax Cable Double Shielded with Tan FEP Jacket

### Configuration

| | |
|---|---|
| Inner Conductor Material and Plating | Copper, Silver |
| Dielectric Type | PTFE |
| Shield Materials | Silver Plated Copper Braid, Silver Plated Copper Braid |
| Jacket Material and Color | FEP, Tan |

### Electrical Specifications

| | |
|---|---|
| Impedance, Ohms | 50 |
| Velocity of Propagation, % | 69.5 |
| Maximum Operating Frequency, GHz | 12.4 |
| Capacitance, pF/ft [pF/m] | 32 [104.99] |
| Maximum Operating Voltage, Volts | 1,900 |

**Electrical Specifications by Frequency**

**Frequency 1**

| | |
|---|---|
| Frequency, MHz | 100 |
| Attenuation, dB/100ft [dB/100m] | 4.4 [14.44] |

**Frequency 2**

| | |
|---|---|
| Frequency, MHz | 1000 |
| Attenuation, dB/100ft [dB/100m] | 14.7 [48.23] |

**Frequency 3**

| | |
|---|---|
| Frequency, GHz | 5 |
| Attenuation, dB/100ft [dB/100m] | 36 [118.11] |

**Frequency 4**

| | |
|---|---|
| Frequency, GHz | 11 |
| Attenuation, dB/100ft [dB/100m] | 57.9 [189.96] |

### Mechanical Specifications

**Temperature**

| | |
|---|---|
| Operating Range, deg C | -55 to +200 |

**Inner Conductor**

| | |
|---|---|
| Number of Strands | 19 |
| Material | Copper |
| Plating | Silver |
| Diameter, in [mm] | 0.039 [0.99] |

Click the following link (or enter part number in “SEARCH” on website) to obtain additional part information including price, inventory and certifications: Flexible RG400 Coax Cable Double Shielded with Tan FEP Jacket RG400/U

The information contained in this document is accurate to the best of our knowledge and representative of the part described herein. It may be necessary to make modifications to the part and/or the documentation of the part, in order to implement improvements. Pasternack reserves the right to make such changes as required. Unless otherwise stated, all specifications are nominal.

Pasternack Enterprises, Inc. • P.O. Box 16759, Irvine, CA 92623
**Phone:** (866) 727-8376 or (949) 261-1920 • **Fax:** (949) 261-7451
Sales@Pasternack.com • Techsupport@Pasternack.com

© 2013 Pasternack Enterprises All Rights Reserved

# Flexible RG400 Coax Cable Double Shielded with Tan FEP Jacket

## TECHNICAL DATA SHEET RG400/U

| | |
|---|---|
| **Dielectric:** | |
| Type | PTFE |
| Diameter, in [mm] | 0.116 [2.95] |
| **Shield:** | |
| Number of | 2 |
| Material 1 | Silver Plated Copper Braid |
| Material 2 | Silver Plated Copper Braid |
| Diameter, in [mm] | 0.156 [3.96] |
| **Jacket:** | |
| Material | FEP |
| Diameter, in [mm] | 0.195 [4.95] |
| Color | Tan |
| One Time Minimum Bend Radius, in [mm] | 1 [25.4] |
| Weight, lbs/ft [Kg/m] | 0.046 [0.07] |

**Compliance Certifications** (visit www.Pasternack.com for current document)

| | |
|---|---|
| RoHS Compliant | Yes |

**Plotted and Other Data**

| | |
|---|---|
| Notes: | Values at 25 °C, sea level |

Flexible RG400 Coax Cable Double Shielded with Tan FEP Jacket from Pasternack Enterprises has same day shipment for domestic and International orders. Our RF, microwave and fiber optic products maintain a 99% availability and are part of the broadest selection in the industry.

Click the following link (or enter part number in “SEARCH” on website) to obtain additional part information including price, inventory and certifications: Flexible RG400 Coax Cable Double Shielded with Tan FEP Jacket RG400/U

URL: http://www.pasternack.com/flexible-0.195-rg400-stranded-center-conductor-50-ohm-coax-cable-fep-jacket-rg400-u-p.aspx

The information contained in this document is accurate to the best of our knowledge and representative of the part described herein. It may be necessary to make modifications to the part and/or the documentation of the part, in order to implement improvements. Pasternack reserves the right to make such changes as required. Unless otherwise stated, all specifications are nominal.

Pasternack Enterprises, Inc. • P.O. Box 16759, Irvine, CA 92623
**Phone:** (866) 727-8376 or (949) 261-1920 • **Fax:** (949) 261-7451
Sales@Pasternack.com • Techsupport@Pasternack.com

© 2013 Pasternack Enterprises All Rights Reserved

# RG400/U CAD Drawing

Flexible RG400 Coax Cable Double Shielded with Tan FEP Jacket

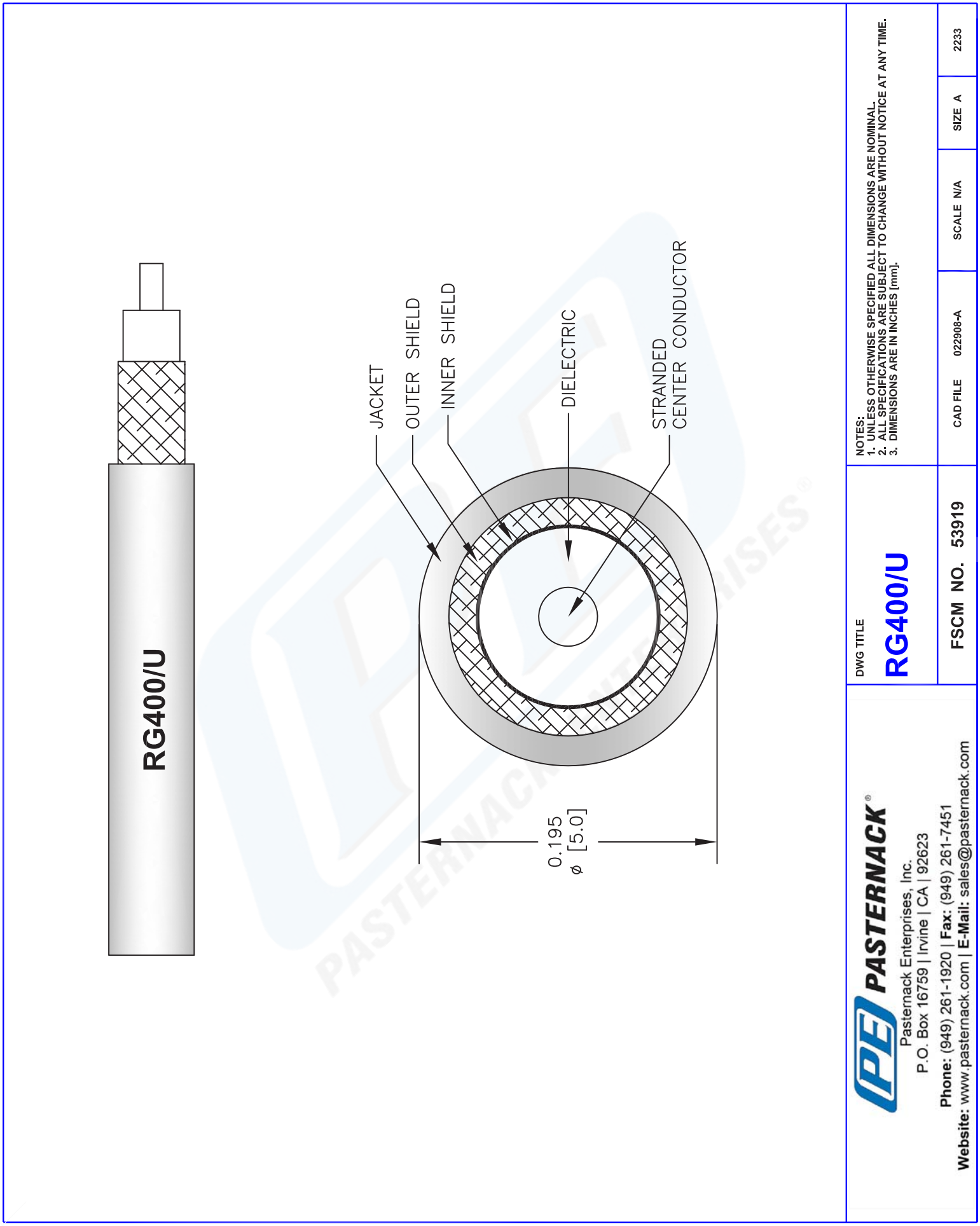


© 2013 Pasternack Enterprises All Rights Reserved