PASTERNACK®
THE ENGINEER'S RF SOURCE

Mini SMP Female Connector Solder Attachment for PE-047SR, PE-SR047AL, PE-SR047FL

RF Connectors Technical Data Sheet PE44491

Configuration

- Mini SMP Female Connector
- MIL-STD-348A
- 50 Ohms
- Straight Body Geometry
- PE-047SR, PE-SR047AL, PE-SR047FL Interface Type
- Solder Attachment

Features

- Max. Operating Frequency 65 GHz
- Good VSWR of 1.68:1
- Gold Plated Beryllium Copper Contact
- Blind Mate Connector

Applications

- General Purpose Test
- Custom Cable Assemblies

Description

Pasternack's PE44491 Mini SMP female connector with solder attachment for PE-047SR, PE-SR047AL and PE-SR047FL is part of our full line of RF components available for same-day shipping. Our Mini SMP female connector operates up to a maximum frequency of 65 GHz and offers good VSWR of 1.68:1. The Pasternack blind mate connector is ideal for applications where direct visual or tactile access to the connection point is not possible, for example, when two circuit boards need to be mated.

Our Mini SMP female connector PE44491 datasheet specifications and drawing with dimensions are shown below in this PDF. Pasternack's broad catalog of RF, microwave and millimeter wave connectors allows designers to configure and customize their signal connections however they like. Whether the need is to provide an I/O for a board design, or simply create a custom cable assembly configuration, Pasternack has the right connector for the job. Pasternack can also expertly build your custom cable assemblies for you and ship same-day.

Electrical Specifications

Description	Minimum	Typical	Maximum	Units
Frequency Range	DC		65	GHz
VSWR			1.68:1	
Operating Voltage (AC)			325	Vrms
Inner Conductor DC Resistance			6	mOhms
Outer Conductor DC Resistance			2	mOhms
Insulation Resistance	5,000			MOhms

Performance by Frequency

Description	F1	F2	F3	F4	F5	Units
Frequency Range	DC to 18	18 to 40	40 to 65			GHz
VSWR, Max	1.11:1	1.33:1	1.68:1			

Click the following link (or enter part number in "SEARCH" on website) to obtain additional part information including price, inventory and certifications: Mini SMP Female Connector Solder Attachment for PE-047SR, PE-SR047AL, PE-SR047FL PE44491

Pasternack Enterprises, Inc. • P.O. Box 16759, Irvine, CA 92623
Phone: (866) 727-8376 or (949) 261-1920 • **Fax:** (949) 261-7451
Sales@Pasternack.com • Techsupport@Pasternack.com

© 2016 Pasternack Enterprises All Rights Reserved

Mini SMP Female Connector Solder Attachment for PE-047SR, PE-SR047AL, PE-SR047FL

Electrical Specification Notes:
Insertion loss = 0.04 x sqrt(fGHz) dB max up to 26.5 GHz.

Mechanical Specifications

Size

Length	0.26 in [6.6 mm]
Width/Dia.	0.13 in [3.30 mm]
Weight	0.006 lbs [2.72 g]

Material Specifications

Description	Material	Plating
Contact	Beryllium Copper	Gold
Insulation	PTFE	
Body	Beryllium Copper	Gold

Mechanical Specification Notes:
Mating cycles: 500 (smooth bore), 100 (full detent) minimum.

Environmental Specifications

Temperature

Operating Range	-55 to +155 deg C
Humidity	MIL-STD-202, Method 106
Shock	MIL-STD-202, Method 213, Condition A
Vibration	MIL-STD-202, Method 204, Condition A
Thermal Shock	MIL-STD-202, Method 107, Condition B

Click the following link (or enter part number in "SEARCH" on website) to obtain additional part information including price, inventory and certifications: Mini SMP Female Connector Solder Attachment for PE-047SR, PE-SR047AL, PE-SR047FL PE44491

Pasternack Enterprises, Inc. • P.O. Box 16759, Irvine, CA 92623
Phone: (866) 727-8376 or (949) 261-1920 • **Fax:** (949) 261-7451
Sales@Pasternack.com • Techsupport@Pasternack.com

© 2016 Pasternack Enterprises All Rights Reserved

Mini SMP Female Connector Solder Attachment for PE-047SR, PE-SR047AL, PE-SR047FL

Compliance Certifications (see product page for current document)

Plotted and Other Data

Notes:

Mini SMP Female Connector Solder Attachment for PE-047SR, PE-SR047AL, PE-SR047FL from Pasternack Enterprises has same day shipment for domestic and International orders. Our RF, microwave and millimeter wave products maintain a 99% availability and are part of the broadest selection in the industry.

Click the following link (or enter part number in "SEARCH" on website) to obtain additional part information including price, inventory and certifications: Mini SMP Female Connector Solder Attachment for PE-047SR, PE-SR047AL, PE-SR047FL PE44491

URL: https://www.pasternack.com/mini-smp-female-standard-pe-047sr-pe-sr047al-pe-sr047fl-connector-pe44491-p.aspx

The information contained in this document is accurate to the best of our knowledge and representative of the part described herein. It may be necessary to make modifications to the part and/or the documentation of the part, in order to implement improvements. Pasternack reserves the right to make such changes as required. Unless otherwise stated, all specifications are nominal. Pasternack does not make any representation or warranty regarding the suitability of the part described herein for any particular purpose, and Pasternack does not assume any liability arising out of the use of any part or documentation.

Pasternack Enterprises, Inc. • P.O. Box 16759, Irvine, CA 92623
Phone: (866) 727-8376 or (949) 261-1920 • **Fax:** (949) 261-7451
Sales@Pasternack.com • Techsupport@Pasternack.com

© 2016 Pasternack Enterprises All Rights Reserved

PE44491 CAD Drawing

Mini SMP Female Connector Solder Attachment for PE-047SR, PE-SR047AL, PE-SR047FL

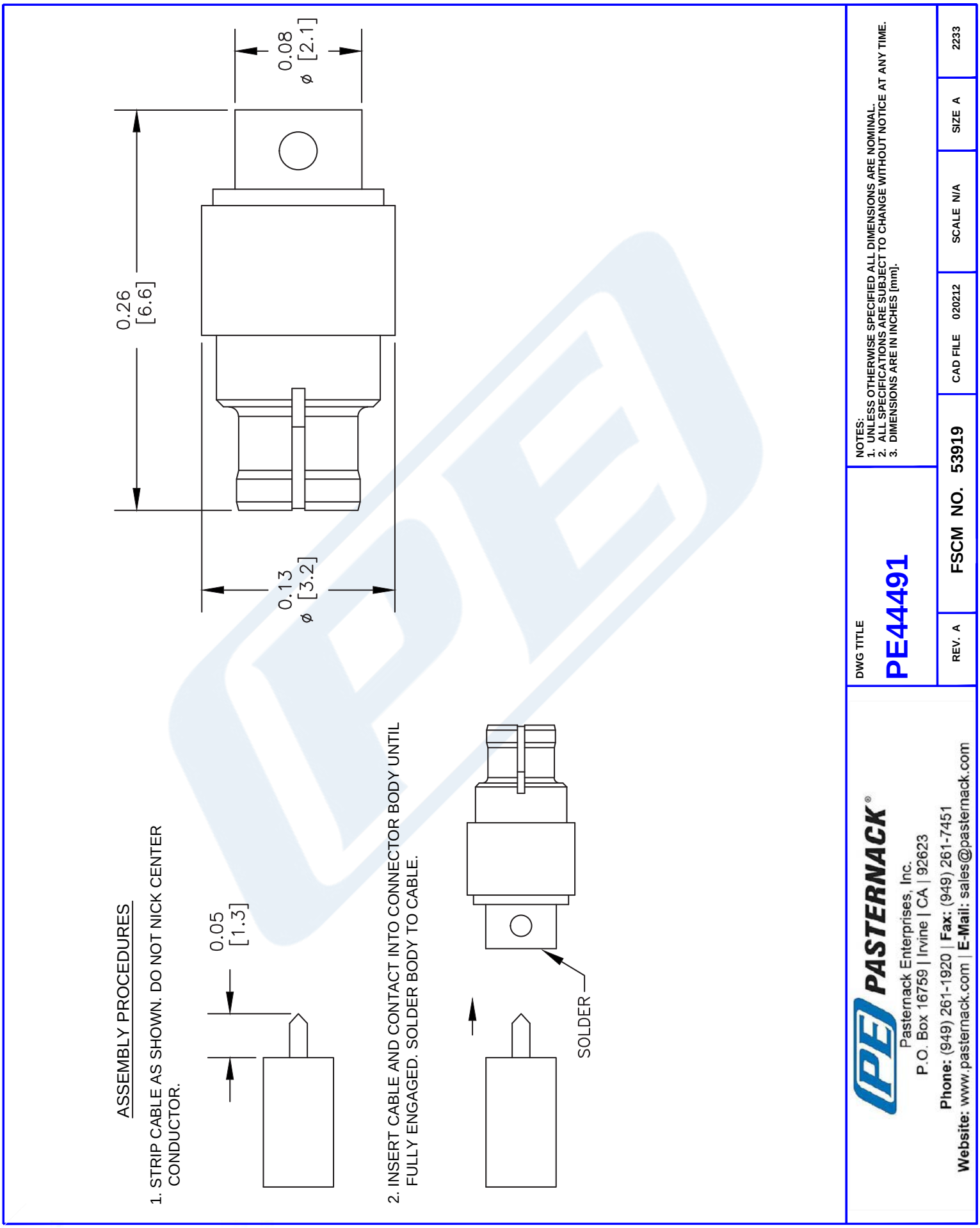

© 2016 Pasternack Enterprises All Rights Reserved

PASTERNACK®
THE ENGINEER'S RF SOURCE

MMCX Plug Connector Solder Attachment for PE-047SR, PE-SR047AL, PE-SR047FL

RF Connectors Technical Data Sheet PE44456

Configuration

- MMCX Plug Connector
- 50 Ohms
- Straight Body Geometry
- PE-047SR, PE-SR047AL, PE-SR047FL Interface Type
- Solder Attachment

Features

- Max. Operating Frequency 6 GHz
- Gold Plated Brass Contact

Applications

- General Purpose Test
- Custom Cable Assemblies

Description

Pasternack's PE44456 MMCX plug connector with solder attachment for PE-047SR, PE-SR047AL and PE-SR047FL is part of our full line of RF components available for same-day shipping. Our MMCX plug connector operates up to a maximum frequency of 6 GHz.

Our MMCX plug connector PE44456 datasheet specifications and drawing with dimensions are shown below in this PDF. Pasternack's broad catalog of RF, microwave and millimeter wave connectors allows designers to configure and customize their signal connections however they like. Whether the need is to provide an I/O for a board design, or simply create a custom cable assembly configuration, Pasternack has the right connector for the job. Pasternack can also expertly build your custom cable assemblies for you and ship same-day.

Electrical Specifications

Description	Minimum	Typical	Maximum	Units
Frequency Range	DC		6	GHz

Mechanical Specifications

Size

Length	0.488 in [12.4 mm]
Width/Dia.	0.16 in [4.06 mm]
Weight	0.003 lbs [1.36 g]

Click the following link (or enter part number in "SEARCH" on website) to obtain additional part information including price, inventory and certifications: MMCX Plug Connector Solder Attachment for PE-047SR, PE-SR047AL, PE-SR047FL PE44456

Pasternack Enterprises, Inc. • P.O. Box 16759, Irvine, CA 92623
Phone: (866) 727-8376 or (949) 261-1920 • **Fax:** (949) 261-7451
Sales@Pasternack.com • Techsupport@Pasternack.com

© 2016 Pasternack Enterprises All Rights Reserved

MMCX Plug Connector Solder Attachment for PE-047SR, PE-SR047AL, PE-SR047FL

Material Specifications

Description	Material	Plating
Contact	Brass	Gold
Insulation	PTFE	
Body	Brass	Gold

Environmental Specifications

Temperature

Operating Range -65 to +165 deg C

Compliance Certifications (see product page for current document)

Plotted and Other Data

Notes:

MMCX Plug Connector Solder Attachment for PE-047SR, PE-SR047AL, PE-SR047FL from Pasternack Enterprises has same day shipment for domestic and International orders. Our RF, microwave and millimeter wave products maintain a 99% availability and are part of the broadest selection in the industry.

Click the following link (or enter part number in "SEARCH" on website) to obtain additional part information including price, inventory and certifications: MMCX Plug Connector Solder Attachment for PE-047SR, PE-SR047AL, PE-SR047FL PE44456

URL: https://www.pasternack.com/mmcx-plug-standard-pe-047sr-pe-sr047al-pe-sr047fl-connector-pe44456-p.aspx

The information contained in this document is accurate to the best of our knowledge and representative of the part described herein. It may be necessary to make modifications to the part and/or the documentation of the part, in order to implement improvements. Pasternack reserves the right to make such changes as required. Unless otherwise stated, all specifications are nominal. Pasternack does not make any representation or warranty regarding the suitability of the part described herein for any particular purpose, and Pasternack does not assume any liability arising out of the use of any part or documentation.

Pasternack Enterprises, Inc. • P.O. Box 16759, Irvine, CA 92623
Phone: (866) 727-8376 or (949) 261-1920 • **Fax:** (949) 261-7451
Sales@Pasternack.com • Techsupport@Pasternack.com

© 2016 Pasternack Enterprises All Rights Reserved

PE44456 CAD Drawing

MMCX Plug Connector Solder Attachment for PE-047SR, PE-SR047AL, PE-SR047FL

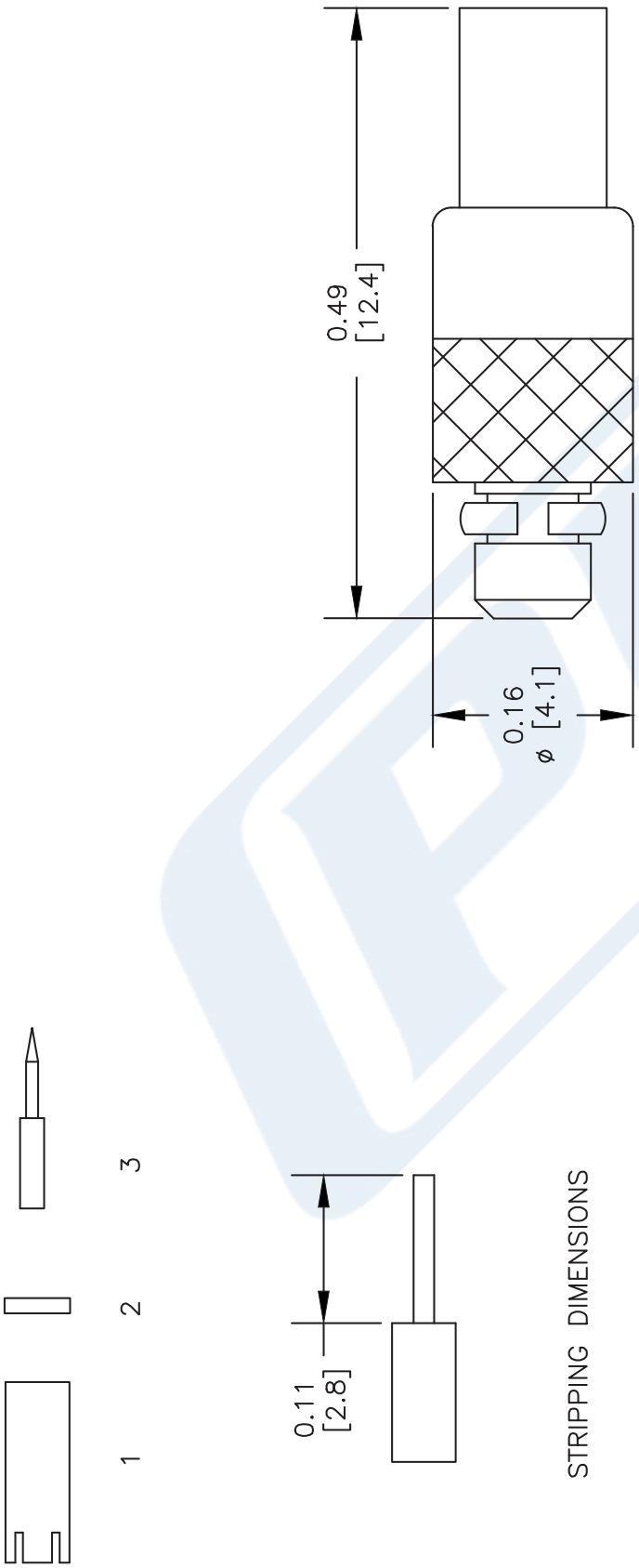

STRIPPING DIMENSIONS

ASSEMBLY PROCEDURES

1. STRIP CABLE AS SHOWN. DO NOT NICK CENTER CONDUCTOR.
2. SLIDE SOLDER ADAPTER (1) OVER OUTER CONDUCTOR. SLIDE PTFE (2) OVER CENTER CONDUCTOR.
3. SOLDER CONTACT (3) TO CENTER CONDUCTOR. SLIDE ADAPTER (1) FORWARD.
4. INSERT ASSEMBLY (1,2&3) INTO BODY, UNTIL CONTACT SEATS IN PLACE. SOLDER BODY & ADAPTER TO OUTER CONDUCTOR.

NOTES:
1. UNLESS OTHERWISE SPECIFIED ALL DIMENSIONS ARE NOMINAL.
2. ALL SPECIFICATIONS ARE SUBJECT TO CHANGE WITHOUT NOTICE AT ANY TIME.
3. DIMENSIONS ARE IN INCHES [mm].
4. FITS MIL-C-17 AND EQUIVALENT CABLES.

DWG TITLE
PE44456

FSCM NO. 53919

CAD FILE 120804-A | SCALE N/A | SIZE A | 2233

PASTERNACK®
Pasternack Enterprises, Inc.
P.O. Box 16759 | Irvine | CA | 92623
Phone: (949) 261-1920 | **Fax:** (949) 261-7451
Website: www.pasternack.com | **E-Mail:** sales@pasternack.com

© 2016 Pasternack Enterprises All Rights Reserved

047 Semi-rigid Coax Cable with Copper Outer Conductor

TECHNICAL DATA SHEET PE-047SR

Configuration

Inner Conductor Material and Plating	Copper Clad Steel, Silver
Dielectric Type	PTFE
Shield Materials	Copper

Electrical Specifications

Impedance, Ohms	50
Maximum Operating Frequency, GHz	40
Dielectric Withstanding Voltage, Vrms	2,000

Electrical Specifications by Frequency

Frequency 1

Frequency, MHz	1000
Attenuation, dB/100ft [dB/100m]	40 [131.23]
Power Handling, Watts	32

Frequency 2

Frequency, GHz	10
Attenuation, dB/100ft [dB/100m]	130 [426.51]
Power Handling, Watts	9

Frequency 3

Frequency, GHz	20
Attenuation, dB/100ft [dB/100m]	190 [623.36]
Power Handling, Watts	6.5

Mechanical Specifications

Temperature

Operating Range, deg C	-55 to +100

Inner Conductor

Number of Strands	1
Material	Copper Clad Steel
Plating	Silver
Diameter, in [mm]	0.011 [0.28]

Dielectric:

Type	PTFE
Diameter, in [mm]	0.037 [0.94]

Shield:

Number of	1
Material 1	Copper
Diameter, in [mm]	0.047 [1.19]

Click the following link (or enter part number in “SEARCH” on website) to obtain additional part information including price, inventory and certifications: 047 Semi-rigid Coax Cable with Copper Outer Conductor PE-047SR

Pasternack Enterprises, Inc. • P.O. Box 16759, Irvine, CA 92623
Phone: (866) 727-8376 or (949) 261-1920 • **Fax:** (949) 261-7451
Sales@Pasternack.com • Techsupport@Pasternack.com

© 2014 Pasternack Enterprises All Rights Reserved

047 Semi-rigid Coax Cable with Copper Outer Conductor

Jacket:

Diameter, in [mm]	0.047 [1.19]
One Time Minimum Bend Radius, in [mm]	0.05 [1.27]
Weight, lbs/ft [Kg/m]	0.005 [0.01]

Compliance Certifications (visit www.Pasternack.com for current document)

RoHS Compliant	
REACH Compliant	12/19/2011

Plotted and Other Data

Notes:

- Values at +25 °C, sea level

047 Semi-rigid Coax Cable with Copper Outer Conductor from Pasternack Enterprises has same day shipment for domestic and International orders. Our RF, microwave and millimeter wave products maintain a 99% availability and are part of the broadest selection in the industry.

Click the following link (or enter part number in "SEARCH" on website) to obtain additional part information including price, inventory and certifications: 047 Semi-rigid Coax Cable with Copper Outer Conductor PE-047SR

URL: http://www.pasternack.com/semirigid-0.047-50-ohm-coax-cable-copper-pe-047sr-p.aspx

The information contained in this document is accurate to the best of our knowledge and representative of the part described herein. It may be necessary to make modifications to the part and/or the documentation of the part, in order to implement improvements. Pasternack reserves the right to make such changes as required. Unless otherwise stated, all specifications are nominal. Pasternack does not make any representation or warranty regarding the suitability of the part described herein for any particular purpose, and Pasternack does not assume any liability arising out of the use of any part or documentation.

Pasternack Enterprises, Inc. • P.O. Box 16759, Irvine, CA 92623
Phone: (866) 727-8376 or (949) 261-1920 • **Fax:** (949) 261-7451
Sales@Pasternack.com • Techsupport@Pasternack.com

© 2014 Pasternack Enterprises All Rights Reserved

PE-047SR CAD Drawing

047 Semi-rigid Coax Cable with Copper Outer Conductor

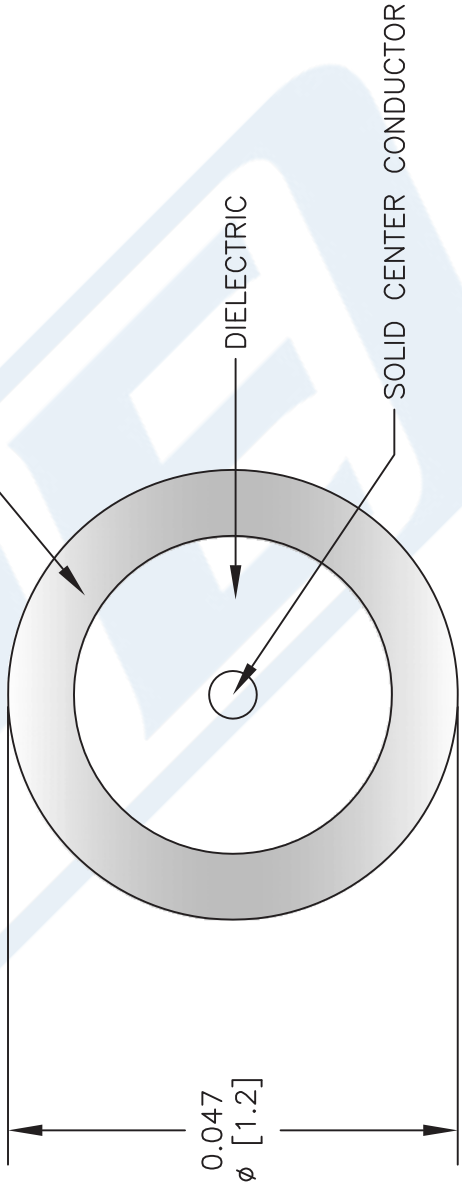

NOTES:
1. UNLESS OTHERWISE SPECIFIED ALL DIMENSIONS ARE NOMINAL.
2. ALL SPECIFICATIONS ARE SUBJECT TO CHANGE WITHOUT NOTICE AT ANY TIME.
3. DIMENSIONS ARE IN INCHES [mm].

DWG TITLE
PE-047SR

FSCM NO. 53919

CAD FILE 073113 | SCALE N/A | SIZE A | 2233

PASTERNACK®
Pasternack Enterprises, Inc.
P.O. Box 16759 | Irvine | CA | 92623
Phone: (949) 261-1920 | **Fax:** (949) 261-7451
Website: www.pasternack.com | **E-Mail:** sales@pasternack.com

© 2014 Pasternack Enterprises All Rights Reserved