3.5mm Male Connector Clamp/Solder Attachment for PE-047SR, PE-P047, PE-P047LL, PE-SR047AL, PE-SR047FL, .047 Semi-Rigid

PE51275

Configuration

- 3.5mm Male Connector
- 50 Ohms
- Straight Body Geometry
- Connector Interface Types: PE-047SR, PE-P047, PE-P047LL, PE-SR047AL, PE-SR047FL, .047 Semi-Rigid

Features

- Max. Operating Frequency 26.5 MHz
- Excellent VSWR of 1.25:1
- Gold over Nickel Plated Beryllium Copper Contact

Applications

- General Purpose Test
- Custom Cable Assemblies

Description

Pasternack's PE51275 , 3.5mm, Standard, Connector is part of our full line of RF components available for same-day shipping. Our 3.5mm male connector operates up to a maximum frequency of 26.5 MHz and offers excellent VSWR of 1.25:1.

Our 3.5mm male connector PE51275 datasheet specifications and drawing with dimensions are shown below in this PDF. Pasternack's broad catalog of RF, microwave and millimeter wave connectors allows designers to configure and customize their signal connections however they like. Whether the need is to provide an I/O for a board design, or simply create a custom cable assembly configuration, Pasternack has the right connector for the job. Pasternack can also expertly build your custom cable assemblies for you and ship same-day.

Electrical Specifications

Description	Minimum	Typical	Maximum	Units
Frequency Range	DC		26.5	MHz
VSWR			1.25:1	
Insertion Loss			0.154	dB
Operating Voltage (AC)			250	Vrms
Dielectric Withstanding Voltage (AC)			750	Vrms
Inner Conductor DC Resistance			3	mOhms
Outer Conductor DC Resistance			2	mOhms
RF Leakage	100			dB
Impedance		50		Ohms

Electrical Specification Notes:
Insertion loss is = 0.03*SQRT(F(GHz)) dB

Mechanical Specifications

Size

Length	0.314961 in [8 mm]
Width	0.314961 in [8 mm]
Height	0.633858 in [16.1 mm]
Weight	0.015 lbs [6.8 g]
Mating Cycles	500 Cycles
Mating Torque	7.1 to 15 in-lbs [[0.80 to 1.70 Nm]]
Cable Retention Force	6.1 lbs [2.77 kg]

© 2023 Infinite Electronics, Inc. Pasternack is a registered trademark of Infinite Electronics, Inc.
+1 (866) 558-2786 | sales@pasternack.com | pasternack.com

3.5mm Male Connector Clamp/Solder Attachment for PE-047SR, PE-P047, PE-P047LL, PE-SR047AL, PE-SR047FL, .047 Semi-Rigid

PE51275

Material Specifications

Description	Material	Plating
Contact	Beryllium Copper	Gold over Nickel
Insulation	PPO	
Body	Stainless Steel	Passivated
Coupling Nut	Stainless Steel	Passivated
Retaining Ring	Beryllium Copper	Copper-Tin-Zinc Alloy
Gasket	Silicone	
Solder Sleeve	Stainless Steel	Passivated

Environmental Specifications

Temperature

Operating Range	-55 to +105 deg C
Thermal Shock	MIL-STD-202, Method 107, Condition B

Compliance Certifications (see product page for current document)

Plotted and Other Data

Notes:

3.5mm Male Connector Clamp/Solder Attachment for PE-047SR, PE-P047, PE-P047LL, PE-SR047AL, PE-SR047FL, .047 Semi-Rigid from Pasternack Enterprises has same day shipment for domestic and International orders. Our RF, microwave and millimeter wave products maintain a 99.4% availability and are part of the broadest selection in the industry.

Click the following link (or enter part number in "SEARCH" on website) to obtain additional part information including price, inventory and certifications: 3.5mm Male Connector Clamp/Solder Attachment for PE-047SR, PE-P047, PE-P047LL, PE-SR047AL, PE-SR047FL, .047 Semi-Rigid PE51275

URL: https://www.pasternack.com/3.5mm-male-pe-047sr-pe-p047-pe-sr047al-connector-pe51275-p.aspx

The information contained within this document is accurate to the best of our knowledge and representative of the part described herein. It may be necessary to make modifications to the part and/or the documentation of the part in order to impliment improvements. Pasternack Enterprises reserves the right to make such changes as required. Unless otherwise stated, all specifications are nominal. Pasternack Enterprises does not make any representation or warranty regarding the suitability of the part described herein for any particular purpose, and Pasternack Enterprises does not assume liability arising out of the use of any part or document.

© 2023 Infinite Electronics, Inc. Pasternack is a registered trademark of Infinite Electronics, Inc.

PE51275 CAD Drawing

3.5mm Male Connector Clamp/Solder Attachment for PE-047SR, PE-P047, PE-P047LL, PE-SR047AL, PE-SR047FL, .047 Semi-Rigid

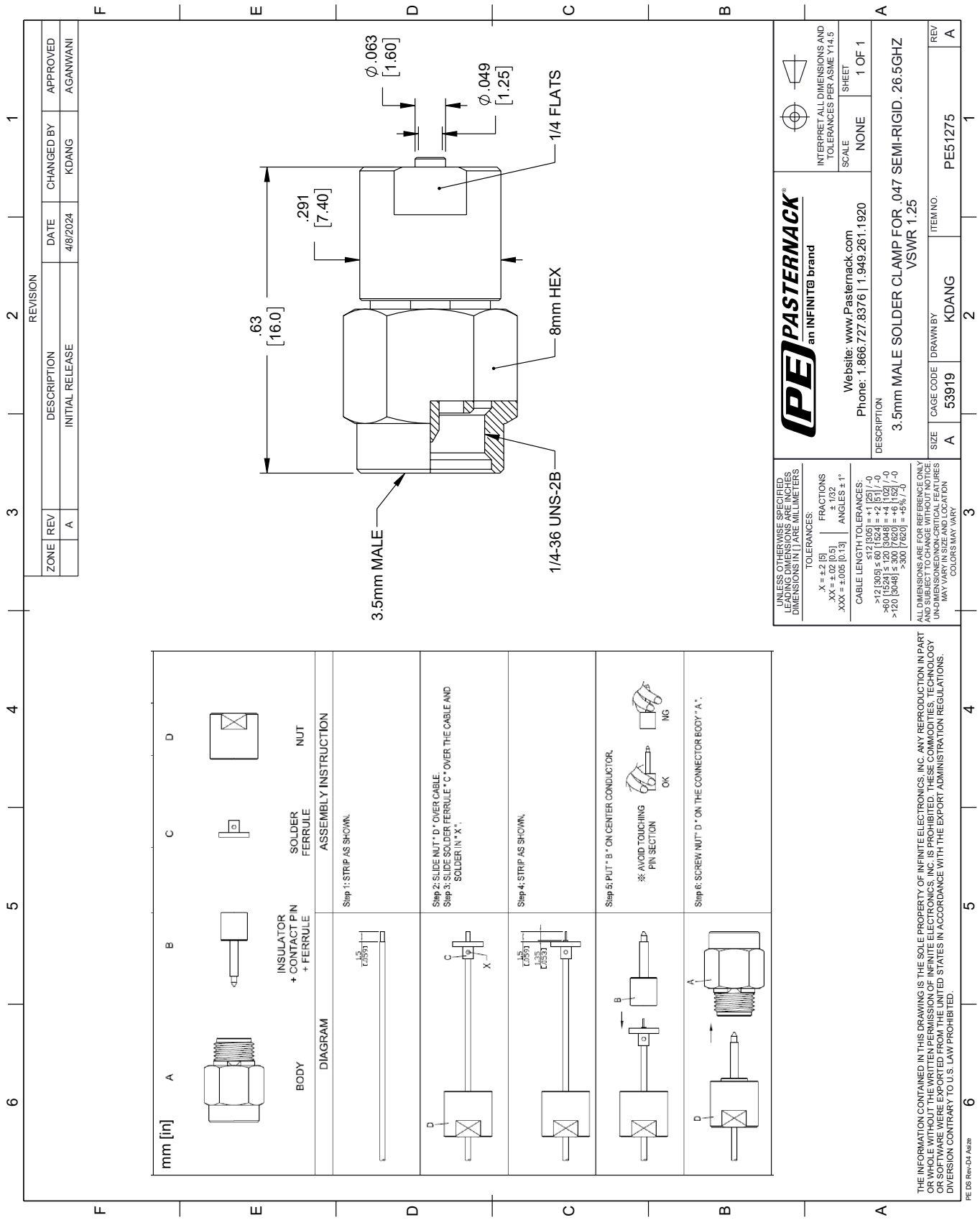

© 2023 Infinite Electronics, Inc. Pasternack is a registered trademark of Infinite Electronics, Inc.

PASTERNACK®
www.pasternack.com

N Female Precision Connector Solder Attachment For PE-047SR, PE-SR047AL, PE-SR047FL

TECHNICAL DATA SHEET PE4945

N Female Precision Connector Solder Attachment For PE-047SR, PE-SR047AL, PE-SR047FL

Configuration

Connector	N Female
Connector Interface Type	PE-047SR,PE-SR047AL,PE-SR047FL
Cable Attachment Method (Shield/Contact)	Solder/Solder
Connector Design	Precision
Body Style	Straight

Electrical Specifications

Impedance, Ohms	50

Mechanical Specifications

Size

Length, in [mm]	1.335 [33.91]
Width/Dia., in [mm]	0.695 [17.65]
Weight, lbs [g]	0.089 [40.37]

Connector

Type	N Female
Contact Material and Plating	Gold
Outer Conductor Material and Plating	Brass, Gold
Body Material and Plating	Brass, Nickel
Dielectric Type	Teflon

Compliance Certifications (visit www.Pasternack.com for current document)

RoHS Compliant	Yes

Plotted and Other Data

Notes:	Values at 25 °C, sea level

N Female Precision Connector Solder Attachment For PE-047SR, PE-SR047AL, PE-SR047FL from Pasternack Enterprises has same day shipment for domestic and International orders. Our RF, microwave and fiber optic products maintain a 99% availability and are part of the broadest selection in the industry.

Click the following link (or enter part number in “SEARCH” on website) to obtain additional part information including price, inventory and certifications: N Female Precision Connector Solder Attachment For PE-047SR, PE-SR047AL, PE-SR047FL PE4945

URL: http://www.pasternack.com/n-female-standard-pe-047sr-pe-sr047al-pe-sr047fl-connector-pe4945-p.aspx

The information contained in this document is accurate to the best of our knowledge and representative of the part described herein. It may be necessary to make modifications to the part and/or the documentation of the part, in order to implement improvements. Pasternack reserves the right to make such changes as required. Unless otherwise stated, all specifications are nominal.

Pasternack Enterprises, Inc. • P.O. Box 16759, Irvine, CA 92623
Phone: (866) 727-8376 or (949) 261-1920 • **Fax:** (949) 261-7451
Sales@Pasternack.com • Techsupport@Pasternack.com

© 2013 Pasternack Enterprises All Rights Reserved

PE4945 CAD Drawing

N Female Precision Connector Solder Attachment For
PE-047SR, PE-SR047AL, PE-SR047FL

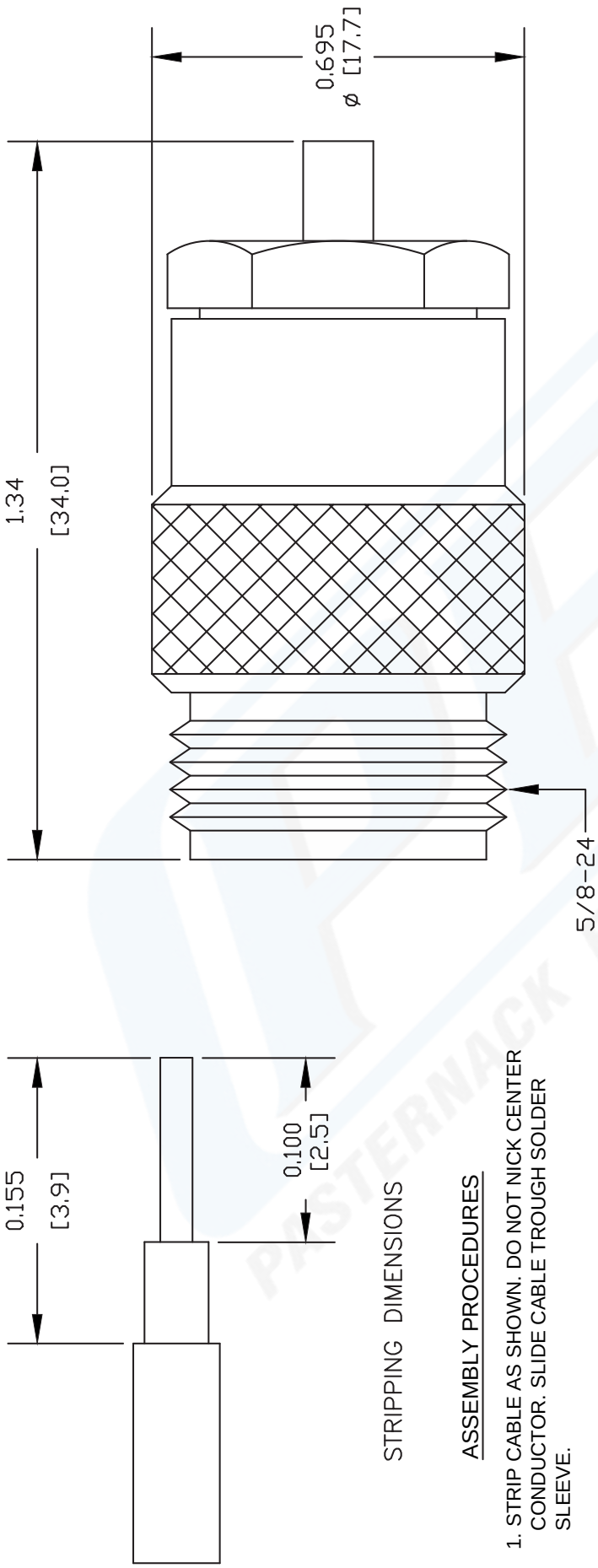

STRIPPING DIMENSIONS

ASSEMBLY PROCEDURES

1. STRIP CABLE AS SHOWN. DO NOT NICK CENTER CONDUCTOR. SLIDE CABLE TROUGH SOLDER SLEEVE.
2. INSERT CENTER CONDUCTOR INTO CONTACT UNTIL DIELECTRIC BOTTOMS INSIDE CONTACT. SOFT SOLDER CENTER CONDUCTOR TO CONTACT.
3. THREAD BODY ONTO SOLDER SLEEVE AND TIGHTEN SECURELY. USING ASSEMBLY TOOL, PRESS CONTACT INTO INSULATOR. SOLDER OUTER CONDUCTOR TO SOLDER SLEEVE.

NOTES:
1. UNLESS OTHERWISE SPECIFIED ALL DIMENSIONS ARE NOMINAL.
2. ALL SPECIFICATIONS ARE SUBJECT TO CHANGE WITHOUT NOTICE AT ANY TIME.
3. DIMENSIONS ARE IN INCHES [mm].
4. FITS MIL-C-17 AND EQUIVALENT CABLES.

DWG TITLE PE4945	CAD FILE 061402	SCALE N/A	SIZE A	127
FSCM NO. 53919			

PASTERNACK®
Pasternack Enterprises, Inc.
P.O. Box 16759 | Irvine | CA | 92623
Phone: (949) 261-1920 | **Fax:** (949) 261-7451
Website: www.pasternack.com | **E-Mail:** sales@pasternack.com

© 2013 Pasternack Enterprises All Rights Reserved

Formable 047 Semi-rigid Coax Cable with Tinned Copper Braid Outer Conductor

RF Cables
Technical Data Sheet

PE-SR047FL

Configuration

- Formable Cable
- 1 Shield(s)

Features

- Dimensionally and electrically the same as standard, solid outer conductor semi-rigid coax
- May be formed by hand and does not require special tools to bend
- May be formed more than once without damaging the outer conductor
- Tinned Copper Braid Outer Conductor
- Max Frequency 20 GHz

Applications

- Test and Measurement
- Communication Systems
- Wireless Systems
- Medical Equipment
- RADAR
- Low Loss Applications

Description

Formable semi-rigid coaxial cable is a hand formable version of standard semi-rigid that does not require complicated and costly preformed cable assemblies. Because the dimensions and electrical characteristics are so closely matched to semi-rigid coax, standard semi-rigid connectors can be used. Pasternack's PE-SR047FL is a formable .047 semi-rigid coax cable with tinned copper braid outer conductor, providing low loss and excellent RF shielding effectiveness. This semi-flexible cable has an FEP jacket to reduce the chance of shorting exposed contacts or circuit conductors. Pasternack's formable cable can be used as an alternative to semi-rigid coaxial cable in applications where flexibility is required without giving up high electrical performance level. PE-SR047FL datasheet specifications and outline drawing for this .047 semi-flexible hand formable cable are shown in the PDF below.

Pasternack carries a wide range of cables ready to ship same day to fit your needs. They are available in corrugated, flexible, formable or semi-rigid versions with different constructions of conductor materials, dielectric materials, shielding configurations and jacket materials. Our cables are designed to fit a wide range of performance criteria including attenuation, operating temperature, environmental factor, and power capability.

Electrical Specifications

Description	Minimum	Typical	Maximum	Units
Frequency Range	DC		20	GHz
Impedance		50		Ohms
Velocity of Propagation		69.5		%
Inner Conductor DC Resistance			207	Ohms/1000ft
Outer Conductor DC Resistance			8	Ohms/1000ft
Nominal Capacitance		32 [104.99]		pF/ft [pF/m]

Click the following link (or enter part number in "SEARCH" on website) to obtain additional part information including price, inventory and certifications: Formable 047 Semi-rigid Coax Cable with Tinned Copper Braid Outer Conductor PE-SR047FL

Pasternack Enterprises, Inc. • P.O. Box 16759, Irvine, CA 92623
Phone: (866) 727-8376 or (949) 261-1920 • **Fax:** (949) 261-7451
Sales@Pasternack.com • Techsupport@Pasternack.com

© 2018 Pasternack Enterprises All Rights Reserved

Formable 047 Semi-rigid Coax Cable with Tinned Copper Braid Outer Conductor

RF Cables
Technical Data Sheet

PE-SR047FL

Performance by Frequency Band

Description	F1	F2	F3	F4	F5	Units
Frequency	0.5	1	3	5	10	GHz
Attenuation, Typ	25	36	65	86	128	dB/100ft
	82.02	118.11	213.25	282.15	419.95	dB/100m

Description	F6	F7	F8	F9	F10	Units
Frequency	15	20				GHz
Attenuation, Typ	162	192				dB/100ft
	531.5	629.92				dB/100m

Mechanical Specifications

Construction Specifications

Description	Material and Plating	Diameter
Inner Conductor	Copper Clad Steel, Silver1	0.011 in 0.28 mm
Conductor Type	Solid	
Dielectric	PTFE	0.034 in 0.86 mm
Outer Conductor	Tinned Copper Braid	0.047 in 1.19 mm

Environmental Specifications

Temperature

Operating Range -40 to +100 deg C

Click the following link (or enter part number in "SEARCH" on website) to obtain additional part information including price, inventory and certifications: Formable 047 Semi-rigid Coax Cable with Tinned Copper Braid Outer Conductor PE-SR047FL

Pasternack Enterprises, Inc. • P.O. Box 16759, Irvine, CA 92623
Phone: (866) 727-8376 or (949) 261-1920 • **Fax:** (949) 261-7451
Sales@Pasternack.com • Techsupport@Pasternack.com

© 2018 Pasternack Enterprises All Rights Reserved

Compliance Certifications (see product page for current document)

Plotted and Other Data

Notes:

Formable 047 Semi-rigid Coax Cable with Tinned Copper Braid Outer Conductor from Pasternack Enterprises has same day shipment for domestic and International orders. Our RF, microwave and millimeter wave products maintain a 99.4% availability and are part of the broadest selection in the industry.

Click the following link (or enter part number in "SEARCH" on website) to obtain additional part information including price, inventory and certifications: Formable 047 Semi-rigid Coax Cable with Tinned Copper Braid Outer Conductor PE-SR047FL

URL: https://www.pasternack.com/formable-0.047-semirigid-replacement-50-ohm-coax-cable-tinned-braid-pe-sr047fl-p.aspx

The information contained in this document is accurate to the best of our knowledge and representative of the part described herein. It may be necessary to make modifications to the part and/or the documentation of the part, in order to implement improvements. Pasternack reserves the right to make such changes as required. Unless otherwise stated, all specifications are nominal. Pasternack does not make any representation or warranty regarding the suitability of the part described herein for any particular purpose, and Pasternack does not assume any liability arising out of the use of any part or documentation.

Pasternack Enterprises, Inc. • P.O. Box 16759, Irvine, CA 92623
Phone: (866) 727-8376 or (949) 261-1920 • **Fax:** (949) 261-7451
Sales@Pasternack.com • Techsupport@Pasternack.com

© 2018 Pasternack Enterprises All Rights Reserved

PE-SR047FL CAD Drawing

Formable 047 Semi-rigid Coax Cable with Tinned Copper Braid Outer Conductor

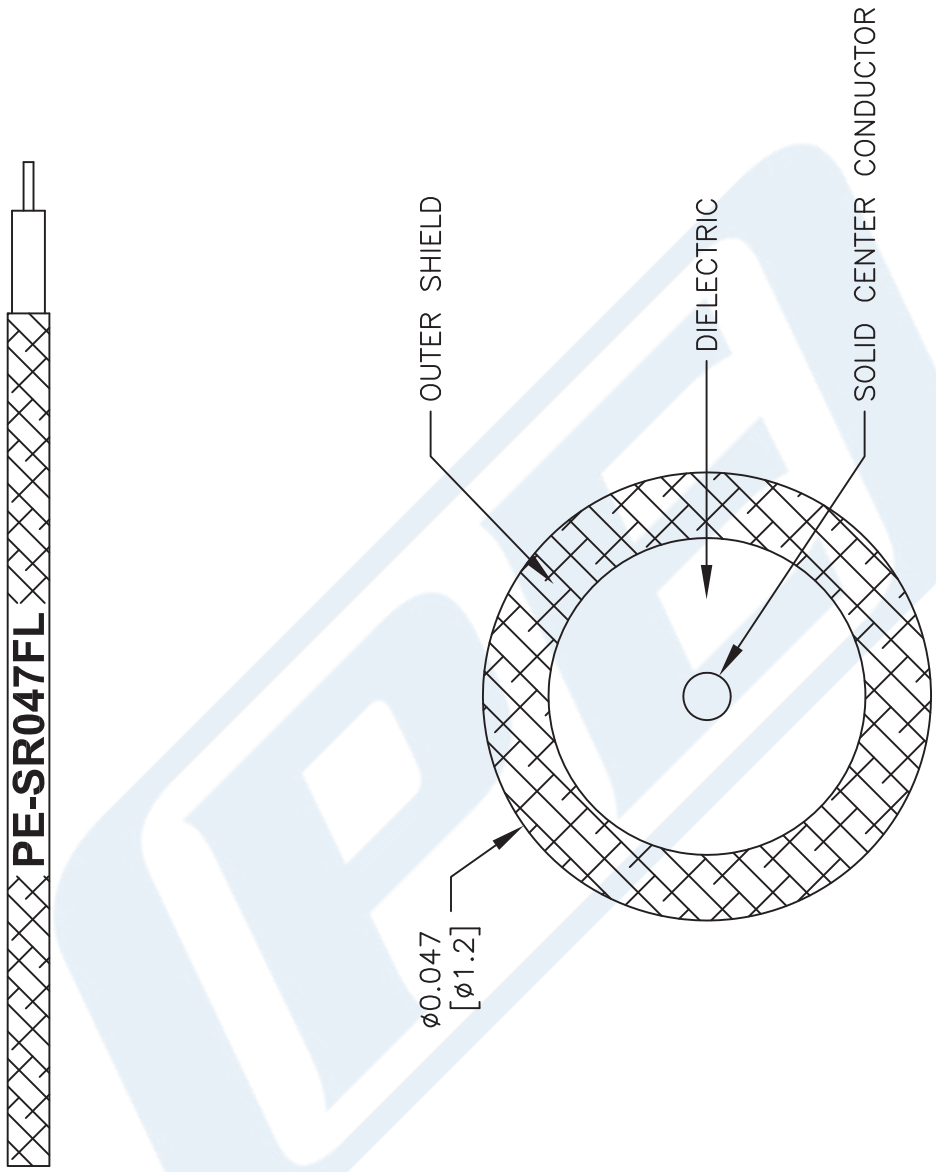

NOTES:
1. UNLESS OTHERWISE SPECIFIED ALL DIMENSIONS ARE NOMINAL.
2. ALL SPECIFICATIONS ARE SUBJECT TO CHANGE WITHOUT NOTICE AT ANY TIME.
3. DIMENSIONS ARE IN INCHES [mm].

DWG TITLE
PE-SR047FL

FSCM NO. 53919

CAD FILE 111716 | SCALE N/A | SIZE A | 41742

PASTERNACK®
THE ENGINEER'S RF SOURCE
Pasternack Enterprises, Inc.
P.O. Box 16759 | Irvine | CA | 92623
Phone: (949) 261-1920 | **Fax:** (949) 261-7451
Website: www.pasternack.com | **E-Mail:** sales@pasternack.com

© 2018 Pasternack Enterprises All Rights Reserved