PASTERNACK
an INFINITE brand

MMCX Plug Right Angle Connector Crimp/Solder Attachment for RG174, RG316, RG188, LMR-100, PE-B100, PE-C100, 0.100 inch

RF Connectors
Technical Data Sheet

PE4898

Configuration

- MMCX Plug Connector
- BS EN 122340
- 50 Ohms
- Right Angle Body Geometry
- Connector Interface Types: RG174, RG316, RG188, LMR-100, PE-B100, PE-C100, .100 inch

Features

- Max. Operating Frequency 6 GHz
- Good VSWR of 1.35:1
- Gold Plated Brass Contact
- 30 µin minimum contact plating

Applications

- General Purpose Test
- Custom Cable Assemblies

Description

Pasternack's PE4898 Right Angle, MMCX, Standard, Connector is part of our full line of RF components available for same-day shipping. Our MMCX plug connector operates up to a maximum frequency of 6 GHz and offers good VSWR of 1.35:1. Its right angle body geometry allows for easier connections in tight spaces.

Our MMCX plug right angle connector PE4898 datasheet specifications and drawing with dimensions are shown below in this PDF. Pasternack's broad catalog of RF, microwave and millimeter wave connectors allows designers to configure and customize their signal connections however they like. Whether the need is to provide an I/O for a board design, or simply create a custom cable assembly configuration, Pasternack has the right connector for the job. Pasternack can also expertly build your custom cable assemblies for you and ship same-day.

Electrical Specifications

Description	Minimum	Typical	Maximum	Units
Frequency Range	DC		6	GHz
VSWR			1.35:1	
Operating Voltage (AC)			250	Vrms
Impedance		50		Ohms

Mechanical Specifications

Size

Length	0.41 in [10.41 mm]
Width	0.28 in [7.01 mm]
Height	0.14 in [3.48 mm]
Weight	0.01 lbs [3.18 g]

Click the following link (or enter part number in "SEARCH" on website) to obtain additional part information including price, inventory and certifications: MMCX Plug Right Angle Connector Crimp/Solder Attachment for RG174, RG316, RG188, LMR-100, PE-B100, PE-C100, 0.100 inch PE4898

Pasternack Enterprises, Inc. • P.O. Box 16759, Irvine, CA 92623
Phone: (866) 727-8376 or (949) 261-1920 • **Fax:** (949) 261-7451
Sales@Pasternack.com • Techsupport@Pasternack.com

© 2020 Pasternack Enterprises All Rights Reserved

MMCX Plug Right Angle Connector Crimp/Solder Attachment for RG174, RG316, RG188, LMR-100, PE-B100, PE-C100, 0.100 inch

RF Connectors
Technical Data Sheet

PE4898

Material Specifications

Description	Material	Plating
Contact	Brass	Gold 30 µin minimum
Insulation	PTFE	
Body	Brass	Gold 3 µin minimum
Crimp Sleeve	Brass	Gold

Environmental Specifications

Temperature

Operating Range -55 to +155 deg C

Compliance Certifications (see product page for current document)

Plotted and Other Data

Notes:

MMCX Plug Right Angle Connector Crimp/Solder Attachment for RG174, RG316, RG188, LMR-100, PE-B100, PE-C100, 0.100 inch from Pasternack Enterprises has same day shipment for domestic and International orders. Our RF, microwave and millimeter wave products maintain a 99.4% availability and are part of the broadest selection in the industry.

Click the following link (or enter part number in “SEARCH” on website) to obtain additional part information including price, inventory and certifications: MMCX Plug Right Angle Connector Crimp/Solder Attachment for RG174, RG316, RG188, LMR-100, PE-B100, PE-C100, 0.100 inch PE4898

URL: https://www.pasternack.com/mmcx-plug-standard-rg174-rg316-rg188-connector-pe4898-p.aspx

The information contained in this document is accurate to the best of our knowledge and representative of the part described herein. It may be necessary to make modifications to the part and/or the documentation of the part, in order to implement improvements. Pasternack reserves the right to make such changes as required. Unless otherwise stated, all specifications are nominal. Pasternack does not make any representation or warranty regarding the suitability of the part described herein for any particular purpose, and Pasternack does not assume any liability arising out of the use of any part or documentation.

Pasternack Enterprises, Inc. • P.O. Box 16759, Irvine, CA 92623
Phone: (866) 727-8376 or (949) 261-1920 • **Fax:** (949) 261-7451
Sales@Pasternack.com • Techsupport@Pasternack.com

© 2020 Pasternack Enterprises All Rights Reserved

PE4898 CAD Drawing

MMCX Plug Right Angle Connector Crimp/Solder Attachment for RG174, RG316, RG188, LMR-100, PE-B100, PE-C100, 0.100 inch

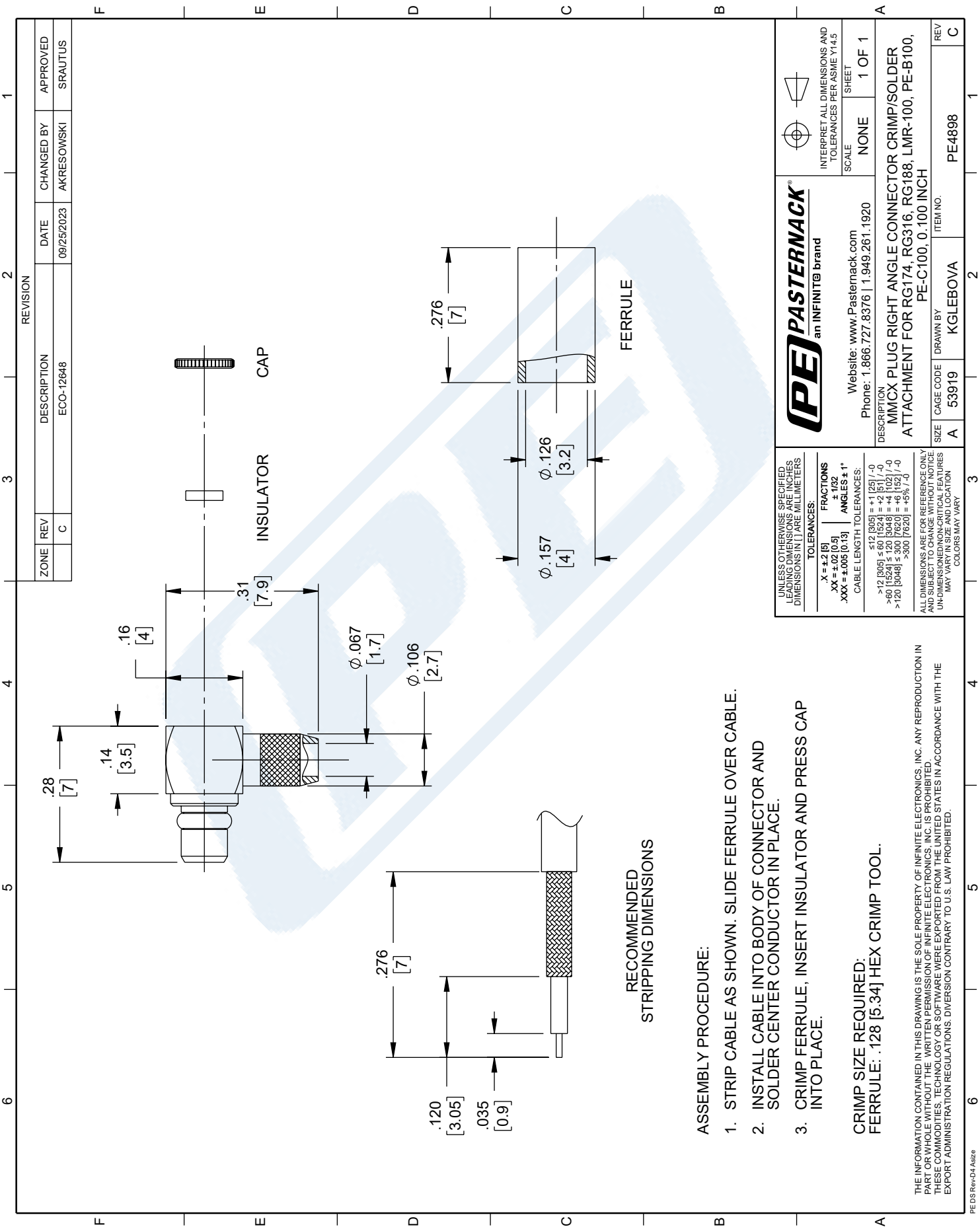

© 2020 Pasternack Enterprises All Rights Reserved

SSMC Plug Right Angle Connector Crimp/Solder Attachment for RG316, RG188, RG174, PE-C100-LSZH, PE-B100, LMR-100A-FR, LMR-100A

RF Connectors
Technical Data Sheet

PE45497

Configuration

- SSMC Plug Connector
- 50 Ohms
- Right Angle Body Geometry
- Connector Interface Types: RG316, RG188, RG174, PE-C100-LSZH, PE-B100, LMR-100A-FR, LMR-100A

Features

- Max. Operating Frequency 12.4 GHz
- Good VSWR of 1.62:1
- Gold Plated Beryllium Copper Contact
- Contact plating according to MIL-G-45204
- Reliable threaded coupling
- Small SSMC connector form factor (50% smaller than SMA, radially)
- IEC 60169-20 SSMC connector interface
- In stock and ready to ship

Applications

- General Purpose Test
- Custom Cable Assemblies
- Avionics
- A/D Modules
- Data Acquisition
- Software defined radio (SDR)
- RADAR/SONAR
- Ultra Wideband Digital Receivers
- Medical equipment

Description

Pasternack's PE45497 SSMC plug right angle connector with crimp/solder attachment for RG316, RG188, RG174, PE-C100-LSZH, PE-B100, LMR-100A-FR and LMR-100A is part of our full line of RF components available for same-day shipping. Our SSMC plug connector operates up to a maximum frequency of 12.4 GHz and offers good VSWR of 1.62:1. Its right angle body geometry allows for easier connections in tight spaces.

Our SSMC plug right angle connector PE45497 datasheet specifications and drawing with dimensions are shown below in this PDF. Pasternack's broad catalog of RF, microwave and millimeter wave connectors allows designers to configure and customize their signal connections however they like. Whether the need is to provide an I/O for a board design, or simply create a custom cable assembly configuration, Pasternack has the right connector for the job. Pasternack can also expertly build your custom cable assemblies for you and ship same-day.

Electrical Specifications

Description	Minimum	Typical	Maximum	Units
Frequency Range	DC		12.4	GHz
VSWR			1.62:1	
Insertion Loss			0.3	dB
Operating Voltage (AC)			250	Vrms
High Potential Voltage 5 MHz			400	Vrms
Inner Conductor DC Resistance			4	mOhms
Outer Conductor DC Resistance			1	mOhms
Insulation Resistance	1,000			MOhms
RF Leakage	-50			dB

Click the following link (or enter part number in "SEARCH" on website) to obtain additional part information including price, inventory and certifications: SSMC Plug Right Angle Connector Crimp/Solder Attachment for RG316, RG188, RG174, PE-C100-LSZH, PE-B100, LMR-100A-FR, LMR-100A PE45497

Pasternack Enterprises, Inc. • P.O. Box 16759, Irvine, CA 92623
Phone: (866) 727-8376 or (949) 261-1920 • **Fax:** (949) 261-7451
Sales@Pasternack.com • Techsupport@Pasternack.com

© 2020 Pasternack Enterprises All Rights Reserved

SSMC Plug Right Angle Connector Crimp/Solder Attachment for RG316, RG188, RG174, PE-C100-LSZH, PE-B100, LMR-100A-FR, LMR-100A

Mechanical Specifications

Size

Length	0.421 in [10.69 mm]
Width/Dia.	0.156 in [3.96 mm]
Height	0.33 in [8.38 mm]
Weight	0.007 lbs [3.18 g]
Mating Cycles	500 Cycles
Mating Torque	1.75 to 2 in-lbs [0.20 to 0.23 Nm]

Material Specifications

Description	Material	Plating
Contact	Beryllium Copper	Gold MIL-G-45204
Insulation	Teflon	
Body	Brass	Gold MIL-G-45204
Coupling Nut	Beryllium Copper	Gold MIL-G-45204
Crimp Sleeve	Brass	Gold MIL-G-45204

Environmental Specifications

Temperature

Operating Range	-65 to +165 deg C
Shock	Method 213, Condition B, 75G @6ms @1/2 sine
Vibration	Method 204, Condition D (20G)
Salt Spray	Method 101, Condition B, 5% salt solution

Compliance Certifications (see product page for current document)

Plotted and Other Data

Notes:

Click the following link (or enter part number in “SEARCH” on website) to obtain additional part information including price, inventory and certifications: SSMC Plug Right Angle Connector Crimp/Solder Attachment for RG316, RG188, RG174, PE-C100-LSZH, PE-B100, LMR-100A-FR, LMR-100A PE45497

Pasternack Enterprises, Inc. • P.O. Box 16759, Irvine, CA 92623
Phone: (866) 727-8376 or (949) 261-1920 • **Fax:** (949) 261-7451
Sales@Pasternack.com • Techsupport@Pasternack.com

© 2020 Pasternack Enterprises All Rights Reserved

SSMC Plug Right Angle Connector Crimp/Solder Attachment for RG316, RG188, RG174, PE-C100-LSZH, PE-B100, LMR-100A-FR, LMR-100A

Assembly Instruction

Assembly Instructions

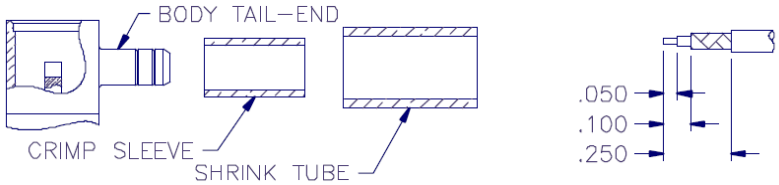

1. TRIM CABLE AS SHOWN ABOVE. TIN END OF CENTER CONDUCTOR.
2. SLIDE CRIMP SLEEVE AND SHRINK TUBE **(IF SUPPLIED)** OVER CABLE JACKET.
3. FLARE CABLE BRAID OUT SLIGHTLY BY ROTATING DIELECTRIC.

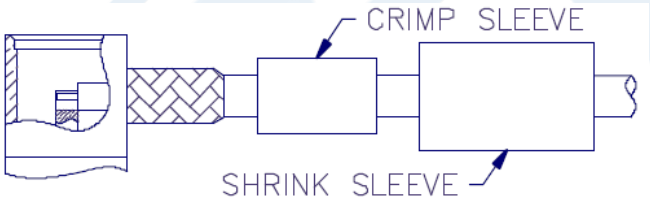

4. INSERT CABLE ASSEMBLY INTO BODY TAIL-END MAKING SURE TAIL GOES OVER DIELECTRIC AND UNDER BRAID. SLIDE IN UNTIL BRAID TOUCHES REAR SURFACE OF BODY.
5. SLIDE CRIMP SLEEVE FORWARD AND USE .128 HEX DIE TO CRIMP SLEEVE TO BRAID.

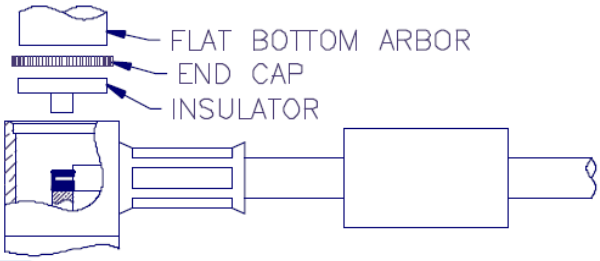

6. SOLDER CENTER CONDUCTOR OF CABLE TO CONTACT.
7. PLACE INSULATOR AND END CAP INTO CONNECTOR BODY AS SHOWN AND USE A .185" DIAMETER FLAT BOTTOM PUNCH TO PRESS CAP IN PLACE. CAP MUST BE BELOW SURFACE TO SEAT PROPERLY.
8. SLIDE SHRINK TUBE (IF SUPPLIED) OVER CRIMP SLEEVE AND SHRINK TO FIT.

Click the following link (or enter part number in "SEARCH" on website) to obtain additional part information including price, inventory and certifications: SSMC Plug Right Angle Connector Crimp/Solder Attachment for RG316, RG188, RG174, PE-C100-LSZH, PE-B100, LMR-100A-FR, LMR-100A PE45497

Pasternack Enterprises, Inc. • P.O. Box 16759, Irvine, CA 92623
Phone: (866) 727-8376 or (949) 261-1920 • **Fax:** (949) 261-7451
Sales@Pasternack.com • Techsupport@Pasternack.com

© 2020 Pasternack Enterprises All Rights Reserved

SSMC Plug Right Angle Connector Crimp/Solder Attachment for RG316, RG188, RG174, PE-C100-LSZH, PE-B100, LMR-100A-FR, LMR-100A

RF Connectors
Technical Data Sheet

PE45497

SSMC Plug Right Angle Connector Crimp/Solder Attachment for RG316, RG188, RG174, PE-C100-LSZH, PE-B100, LMR-100A-FR, LMR-100A from Pasternack Enterprises has same day shipment for domestic and International orders. Our RF, microwave and millimeter wave products maintain a 99.4% availability and are part of the broadest selection in the industry.

Click the following link (or enter part number in “SEARCH” on website) to obtain additional part information including price, inventory and certifications: SSMC Plug Right Angle Connector Crimp/Solder Attachment for RG316, RG188, RG174, PE-C100-LSZH, PE-B100, LMR-100A-FR, LMR-100A PE45497

URL: https://www.pasternack.com/ssmc-plug-rg316-rg188-pe-c100-lszh-pe-b100-fr-connector-pe45497-p.aspx

The information contained in this document is accurate to the best of our knowledge and representative of the part described herein. It may be necessary to make modifications to the part and/or the documentation of the part, in order to implement improvements. Pasternack reserves the right to make such changes as required. Unless otherwise stated, all specifications are nominal. Pasternack does not make any representation or warranty regarding the suitability of the part described herein for any particular purpose, and Pasternack does not assume any liability arising out of the use of any part or documentation.

Pasternack Enterprises, Inc. • P.O. Box 16759, Irvine, CA 92623
Phone: (866) 727-8376 or (949) 261-1920 • **Fax:** (949) 261-7451
Sales@Pasternack.com • Techsupport@Pasternack.com

© 2020 Pasternack Enterprises All Rights Reserved

PE45497 CAD Drawing

SSMC Plug Right Angle Connector Crimp/Solder Attachment for RG316, RG188, RG174, PE-C100-LSZH, PE-B100, LMR-100A-FR, LMR-100A

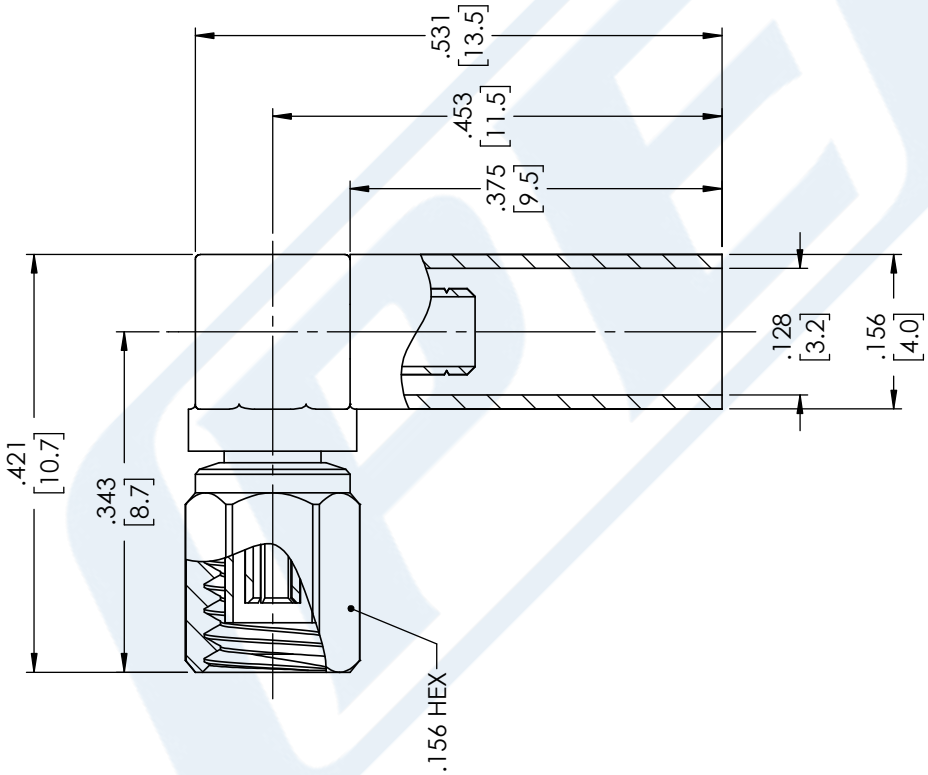

STANDARD TOLERANCES	
.X	±0.2
.XX	±0.01
.XXX	±0.005

*STANDARD TOLERANCES APPLY ONLY TO DIMENSIONS IN INCHES

NOTES:
1. UNLESS OTHERWISE SPECIFIED ALL DIMENSIONS ARE NOMINAL.
2. ALL SPECIFICATIONS ARE SUBJECT TO CHANGE WITHOUT NOTICE AT ANY TIME.
3. DIMENSIONS ARE IN INCHES [mm].

DWG TITLE PE45497

CAD FILE 08/13/18 | SCALE N/A | SIZE A | CN2245

CAGE CODE 53919

PASTERNACK® THE ENGINEER'S RF SOURCE
Pasternack Enterprises, Inc.
P.O. Box 16759 | Irvine | CA | 92623
Phone: (949) 261-1920 | **Fax:** (949) 261-7451
Website: www.pasternack.com | **E-Mail:** sales@pasternack.com

© 2020 Pasternack Enterprises All Rights Reserved

LMR-100-UF Ultra Flex version of the 100 series Low Loss Coax

LMR-100A-UF

TIMES MICROWAVE SYSTEMS

Times Microwave Systems Connector Specification

Configuration

- Low Loss, Outdoor Flexible Cable
- 2 Shield(s)

Features

- Ultra Flexible Coax with Stranded Center Conductor
- Max Operating Frequency of 8 GHz
- Phase Velocity 66% VoP
- Max Operating Temperature +85°C
- TPE Jacket
- Min Install Bend Radius of 0.25 inches

Applications

- RF Test Systems
- Antenna Installs
- Laboratory Applications
- General Purpose RF Interconnect
- Jumper Assemblies

Description

LMR-100-UF Ultra Flex version of the 100 series Low Loss Coax from Times Microwave is part of the large product offering by Pasternack of radio frequency coaxial cable types specifically stocked to be ready for same-day shipment. Pasternack LMR-100-UF coax cable is manufactured in an ultra flexible design and has a 50 Ohm impedance. This low loss and ultra flexible 50 Ohm coax cable LMR-100-UF is constructed with a 0.110 inch diameter and Black TPE jacket.

LMR-100-UF flexible 50 Ohm coax cable with TPE jacket is rated for a 8 GHz maximum operating frequency. This 50 Ohm 0.110 inch diameter and low loss ultra flexible coax cable is built with an aluminum double shield count and RF shielding of 90 dB. Times Microwave LMR-100-UF TPE coax is constructed with PE dielectric and a maximum operating temperature of 85 degrees C. Pasternack's offering of LMR-100-UF coax cable provides specs for this wire on its RF coax cable LMR-100-UF datasheet.

LMR-100-UF cable is part of more than one million RF, microwave parts in stock at Pasternack. This Times Microwave low loss ultra flexible LMR-100-UF coax cable is ready to buy and can be shipped worldwide. Pasternack also maintains a wide selection of other radio frequency coaxial cable types that ship same-day from our warehouse as with the rest of our other RF/microwave components.

* LMR™ is a trademark of Times Microwave Systems.

Electrical Specifications

Description	Minimum	Typical	Maximum	Units
Frequency Range	DC		8	GHz
Impedance		50		Ohms
Velocity of Propagation		66		%
Time Delay		1.54 [5.05]		ns/ft [ns/m]
Shielding Effectiveness	90			dB
Dielectric Withstanding Voltage (DC)			500	Vdc
Jacket Spark			2,000	Vrms
Inner Conductor DC Resistance			81	Ohms/1000ft
Outer Conductor DC Resistance			9.5	Ohms/1000ft

© 2023 Infinite Electronics, Inc. Pasternack is a registered trademark of Infinite Electronics, Inc.
+1 (866) 558-2786 | sales@pasternack.com | pasternack.com

LMR-100-UF Ultra Flex version of the
100 series Low Loss Coax

LMR-100A-UF

Electrical Specifications

Description	Minimum	Typical	Maximum	Units
Nominal Capacitance		30.8 [101.05]		pF/ft [pF/m]
Nominal Inductance		0.077 [0.25]		uH/ft [uH/m]
Input Power (Peak)			600	Watts

Performance by Frequency Band

Description	F1	F2	F3	F4	F5	Units
Frequency	50	150	220	450	900	MHz
Attenuation, Typ	5.1	8.9	10.9	15.8	22.8	dB/100ft
	16.73	29.2	35.76	51.84	74.8	dB/100m
Input Power (CW), Max	180	100	83	57	39	Watts

Description	F6	F7	F8	F9	F10	Units
Frequency	1.5	1.8	2	2.5	5.8	GHz
Attenuation, Typ	30.1	33.2	35.2	39.8	64.1	dB/100ft
	98.75	108.92	115.49	130.58	210.3	dB/100m
Input Power (CW), Max	29	27	25	22	13	Watts

Mechanical Specifications

Diameter	0.11 in [2.79 mm}
Weight	0.008 lbs/ft [0.01 kg/m]
Min. Bend Radius (Installation)	0.25 in [6.35 mm]
Min. Bend Radius (Repeated)	1 in [25.4 mm]
Bending Moment	0.1 lbs-ft [0.14 N-m]
Tensile Strength	15 lbs [6.8 kg]
Flat Plate Crush	10 lbs/in [0.18 kg/mm]

Construction Specifications

Description	Material and Plating	Diameter
Inner Conductor	Copper, 1 Strand	0.018 in [0.46 mm]
Conductor Type	Stranded	
Dielectric	PE	0.06 in [1.52 mm]
First Shield	Aluminum Tape	0.068 in [1.73 mm]
Second Shield	Tinned Copper	0.083 in [2.11 mm]
Jacket	TPE, Black	0.11 in [2.79 mm]

© 2023 Infinite Electronics, Inc. Pasternack is a registered trademark of Infinite Electronics, Inc.
+1 (866) 558-2786 | sales@pasternack.com | pasternack.com

LMR-100-UF Ultra Flex version of the
100 series Low Loss Coax

LMR-100A-UF

Environmental Specifications

Temperature

Operating Range	-40 to 85 deg C
Installation Range	-40 to 85 deg C
Storage Range	-70 to 85 deg C

Compliance Certifications (see product page for current document)

Plotted and Other Data

Notes:

LMR-100-UF Ultra Flex version of the 100 series Low Loss Coax from Pasternack Enterprises has same day shipment for domestic and International orders. Our RF, microwave and millimeter wave products maintain a 99.4% availability and are part of the broadest selection in the industry.

Click the following link (or enter part number in "SEARCH" on website) to obtain additional part information including price, inventory and certifications: LMR-100-UF Ultra Flex version of the 100 series Low Loss Coax LMR-100A-UF

URL: https://www.pasternack.com/low-loss-flexible-lmr-100a-uf-tpe-jacket-aluminum-tape-over-tinned-copper-outer-conductor-double-shielded-lmr-100a-uf-p.aspx

The information contained within this document is accurate to the best of our knowledge and representative of the part described herein. It may be necessary to make modifications to the part and/or the documentation of the part in order to impliment improvements. Pasternack Enterprises reserves the right to make such changes as required. Unless otherwise stated, all specifications are nominal. Pasternack Enterprises does not make any representation or warranty regarding the suitability of the part described herein for any particular purpose, and Pasternack Enterprises does not assume liability arising out of the use of any part or document.

© 2023 Infinite Electronics, Inc. Pasternack is a registered trademark of Infinite Electronics, Inc.

LMR-100A-UF CAD Drawing

LMR-100-UF Ultra Flex version of the 100 series Low Loss Coax

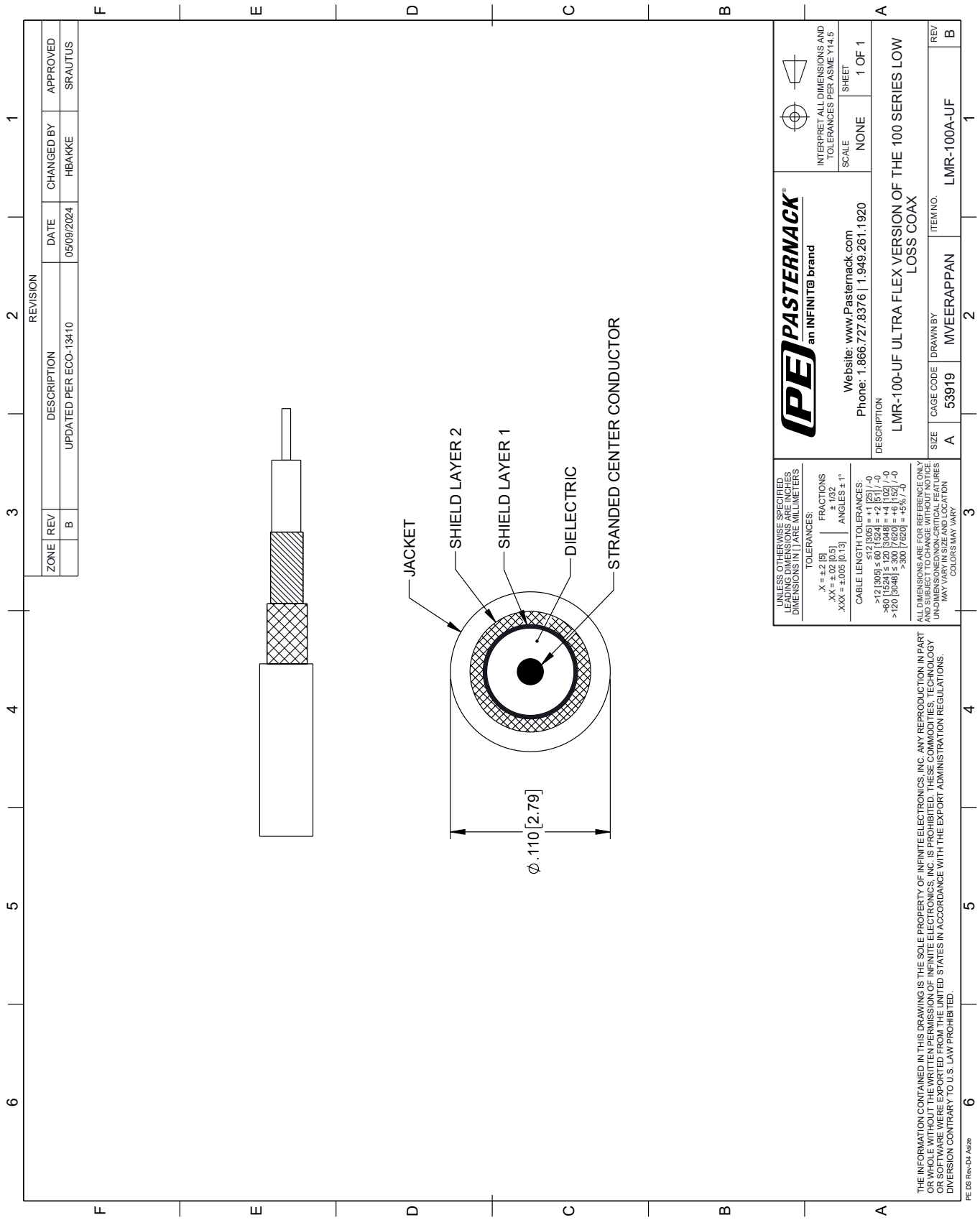

© 2023 Infinite Electronics, Inc. Pasternack is a registered trademark of Infinite Electronics, Inc.