MATERIALS	
BODY	BRASS NICKEL PLATED
CONTACT	GOLD PLATED
INSULATOR	PTFE

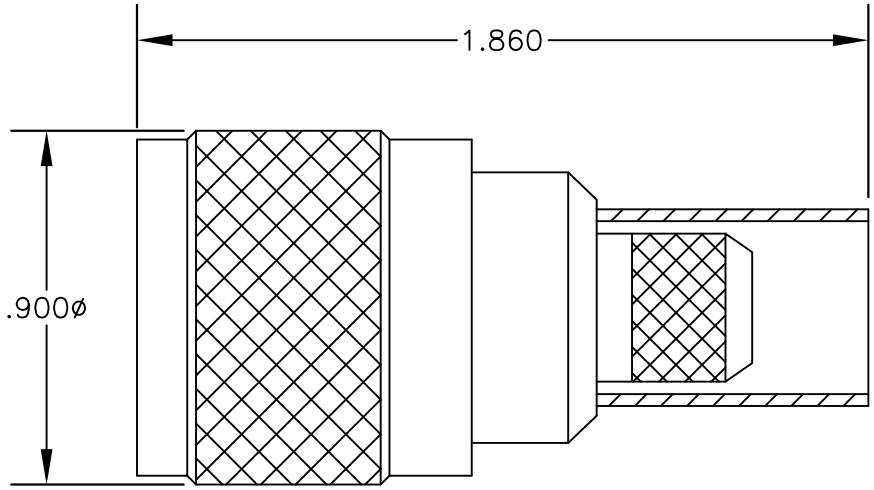

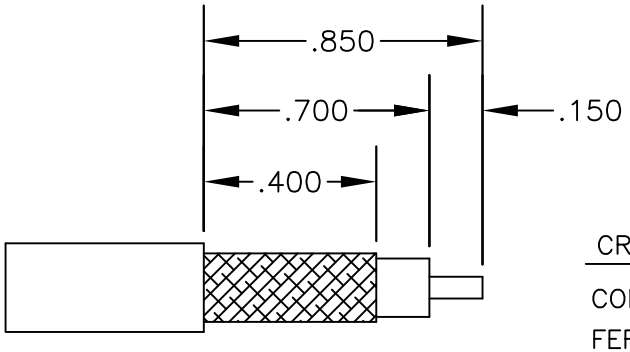

STRIPPING DIMENSIONS

CRIMP SIZE REQUIRED

CONTACT: SOLDER

FERRULE: .429" HEX CRIMP TOOL

PASTERNACK ENTERPRISES®
ESTABLISHED 1972

PASTERNACK ENTERPRISES, INC.
P.O BOX 16759, IRVINE, CA 92623
PHONE (949) 261-1920 FAX (949) 261-7451

WEB ADDRESS: www.pasternack.com
E-MAIL ADDRESS: sales@pasternack.com

COAXIAL & FIBER OPTICS

DWG TITLE	DES.
PE4473	HN MALE, CRIMP ATTACHMENT FOR RG8 & RG213

SIZE A	FSCM NO. 53919	CAD FILE 052202	SCALE N/A		127

NOTES:
1. UNLESS OTHERWISE SPECIFIED ALL DIMENSIONS ARE NOMINAL.
2. ALL SPECIFICATIONS ARE SUBJECT TO CHANGE WITHOUT NOTICE AT ANY TIME.

PASTERNACK
an INFINITE brand

N Male Connector Crimp/Solder Attachment for RG213, RG215, RG8

RF Connectors Technical Data Sheet

PE4430

Configuration

- N Male Connector
- MIL-STD-348A
- 50 Ohms
- Straight Body Geometry
- Connector Interface Types: RG213, RG215, RG8

Features

- Max. Operating Frequency 10 GHz
- Good VSWR of 1.3:1
- Gold Plated Brass Contact
- 30 µin minimum contact plating

Applications

- General Purpose Test
- Custom Cable Assemblies

Description

Pasternack's PE4430 type N male connector with crimp/solder attachment for RG213, RG215 and RG8 is part of our full line of RF components available for same-day shipping. Our type N male connector operates up to a maximum frequency of 10 GHz and offers good VSWR of 1.3:1.

Our type N male connector PE4430 datasheet specifications and drawing with dimensions are shown below in this PDF. Pasternack's broad catalog of RF, microwave and millimeter wave connectors allows designers to configure and customize their signal connections however they like. Whether the need is to provide an I/O for a board design, or simply create a custom cable assembly configuration, Pasternack has the right connector for the job. Pasternack can also expertly build your custom cable assemblies for you and ship same-day.

Electrical Specifications

Description	Minimum	Typical	Maximum	Units
Frequency Range	DC		10	GHz
VSWR			1.3:1	
Operating Voltage (AC)			1,000	Vrms

Mechanical Specifications

Size	
Length	1.57 in [39.88 mm]
Width/Dia.	0.787 in [19.99 mm]
Weight	0.075 lbs [34.02 g]

Click the following link (or enter part number in "SEARCH" on website) to obtain additional part information including price, inventory and certifications: N Male Connector Crimp/Solder Attachment for RG213, RG215, RG8 PE4430

Pasternack Enterprises, Inc. • P.O. Box 16759, Irvine, CA 92623
Phone: (866) 727-8376 or (949) 261-1920 • **Fax:** (949) 261-7451
Sales@Pasternack.com • Techsupport@Pasternack.com

© 2020 Pasternack Enterprises All Rights Reserved

N Male Connector Crimp/Solder Attachment for RG213, RG215, RG8

RF Connectors Technical Data Sheet

PE4430

Material Specifications

Description	Material	Plating
Contact	Brass	Gold 30 µin minimum
Insulation	PTFE	
Body	Brass	Nickel 100 µin minimum
Coupling Nut	Brass	Nickel 100 µin minimum
Crimp Sleeve	Brass	Nickel

Environmental Specifications

Temperature

Operating Range -65 to +165 deg C

Compliance Certifications (see product page for current document)

Plotted and Other Data

Notes:

N Male Connector Crimp/Solder Attachment for RG213, RG215, RG8 from Pasternack Enterprises has same day shipment for domestic and International orders. Our RF, microwave and millimeter wave products maintain a 99.4% availability and are part of the broadest selection in the industry.

Click the following link (or enter part number in “SEARCH” on website) to obtain additional part information including price, inventory and certifications: N Male Connector Crimp/Solder Attachment for RG213, RG215, RG8 PE4430

URL: https://www.pasternack.com/n-male-standard-rg213-rg8-connector-pe4430-p.aspx

The information contained in this document is accurate to the best of our knowledge and representative of the part described herein. It may be necessary to make modifications to the part and/or the documentation of the part, in order to implement improvements. Pasternack reserves the right to make such changes as required. Unless otherwise stated, all specifications are nominal. Pasternack does not make any representation or warranty regarding the suitability of the part described herein for any particular purpose, and Pasternack does not assume any liability arising out of the use of any part or documentation.

Pasternack Enterprises, Inc. • P.O. Box 16759, Irvine, CA 92623
Phone: (866) 727-8376 or (949) 261-1920 • **Fax:** (949) 261-7451
Sales@Pasternack.com • Techsupport@Pasternack.com

© 2020 Pasternack Enterprises All Rights Reserved

PE4430 CAD Drawing

N Male Connector Crimp/Solder Attachment for RG213, RG215, RG8

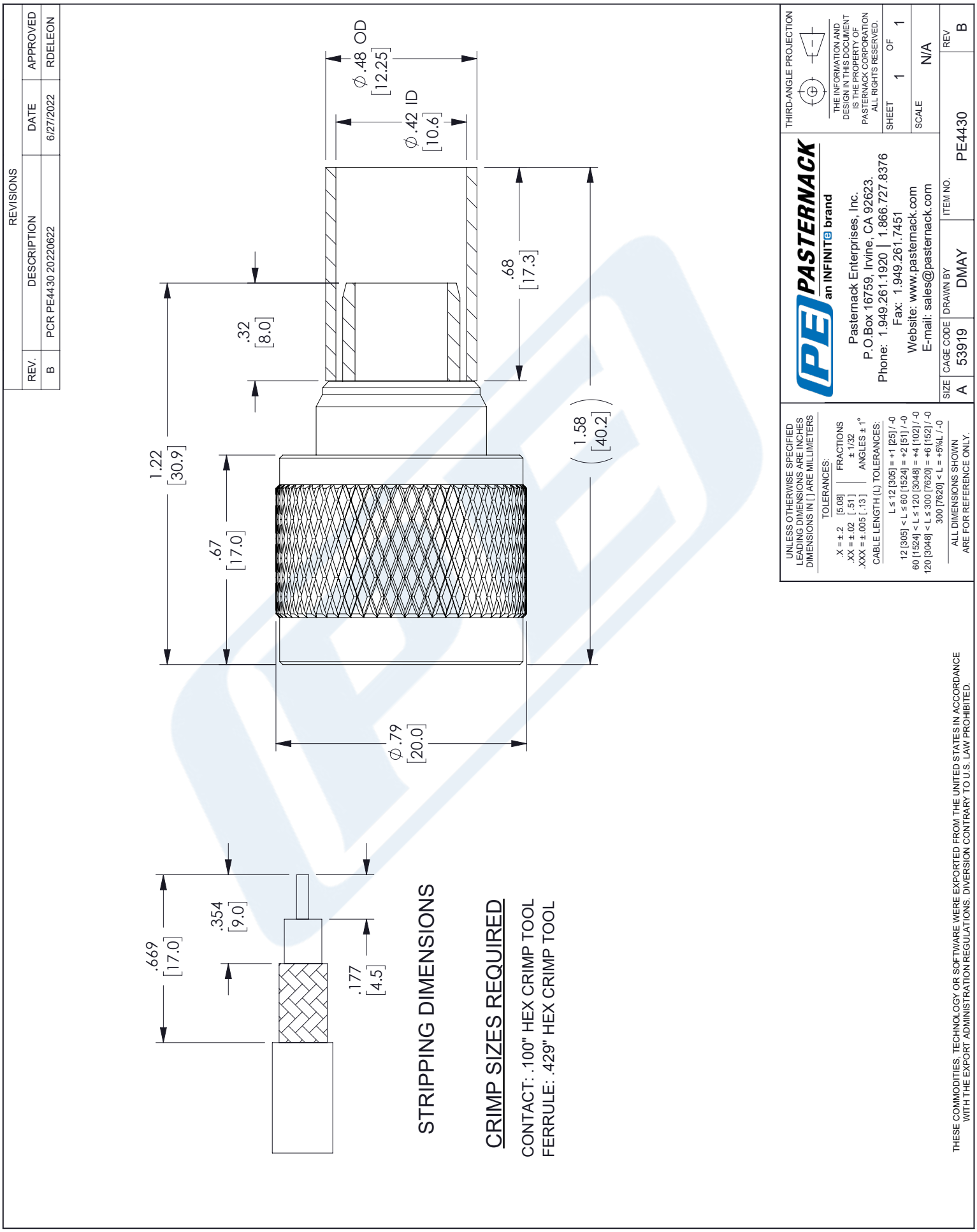

© 2020 Pasternack Enterprises All Rights Reserved

PASTERNACK
an INFINITE brand

20kV Flexible RG213 High Voltage Coax Cable Single Shielded with Red PUR Jacket

RF Cables
Technical Data Sheet

RG213HV

Configuration

- 1 Shield(s)

Features

- Voltage rating up to 20kV
- Low Signal Attenuation
- Robust Insulation
- Flexible and Durable

Applications

- Semiconductor Testing
- Radar Systems
- Broadcast Stations
- Research and Development
- Military and Defense

Description

RG213HV part number from Pasternack is a coax cable that is flexible. Pasternack's flexible coax RF cable has an impedance of 50 Ohm and PE dielectric. Our RG213HV coax cable is constructed with a 0.394-inch jacket made of red polyurethane. Our coax cable from Pasternack has a maximum frequency of 1000 MHz. This red colored coax cable has a 0.317-inch shield layer of tinned copper braid. Additional specifications for this RG213HV single-shielded RF coaxial cable are on our downloadable PDF datasheet above. Our RG213HV coax cable has a maximum operating temperature of 70 degrees C. This 20kV red-colored flexible RF cable with a 50 Ohm impedance has a typical insertion loss/maximum attenuation of 0.09 dB/ft at a frequency of 1000 MHz. The RG213HV flexible RF cable has a stranded copper center conductor with bare conductor plating.

RG213 high-voltage RF cable is specifically designed for radio frequency applications that require handling high levels of voltage. With a rated voltage of 20kV, this cable ensures safe and efficient transmission of high-voltage RF signals. It is commonly used in industrial applications where reliable RF signal distribution is essential. The RG213 cable is built with durable insulation materials and conductors to minimize signal loss and maintain excellent performance. Adhering to safety guidelines and proper installation practices are essential when working with this cable to maintain electrical safety and preserve signal integrity. Pasternack RG213HV coax cables are part of over 40,000 RF, microwave, and millimeter wave components. These flexible RF cables and our other RF parts are available for same-day shipping worldwide. Custom RF cable assemblies using RG213HV other coax can be built and shipped the same business day as well.

Electrical Specifications

Description	Minimum	Typical	Maximum	Units
Frequency Range	DC		1,000	MHz
Impedance		50		Ohms
Operating Voltage (DC)			20,000	Vdc
Test Voltage (Conductor/Braid)		41		kVoc/1min
Test Voltage (Spark Test, Core)		15		kVac
Test Voltage (Spark Test, Jacket)		5		kVac
Test Voltage (Type Test)		32		kVoc

Click the following link (or enter part number in "SEARCH" on website) to obtain additional part information including price, inventory and certifications: 20kV Flexible RG213 High Voltage Coax Cable Single Shielded with Red PUR Jacket RG213HV

Pasternack Enterprises, Inc. • P.O. Box 16759, Irvine, CA 92623
Phone: (866) 727-8376 or (949) 261-1920 • **Fax:** (949) 261-7451
Sales@Pasternack.com • Techsupport@Pasternack.com

© 2020 Pasternack Enterprises All Rights Reserved

20kV Flexible RG213 High Voltage Coax Cable Single Shielded with Red PUR Jacket

RF Cables
Technical Data Sheet

RG213HV

Performance by Frequency Band

Description	F1	F2	F3	F4	F5	Units
Frequency	50	100	400	1,000		MHz
Attenuation, Typ	1.2	2.3	4.8	9		dB/100ft
	3.94	7.55	15.75	29.53		dB/100m

Mechanical Specifications

Diameter	0.394 in [10.01 mm}
Weight	0.097 lbs/ft [0.14 kg/m]
Min. Bend Radius (Repeated)	1.969 in [50.01 mm]

Construction Specifications

Description	Material and Plating	Diameter
Inner Conductor	Copper, Bare, 7 Strands	0.089 in [2.26 mm]
Conductor Type	Stranded	
Dielectric	PE	0.286 in [7.26 mm]
First Shield	Tinned Copper Braid	0.317 in [8.05 mm]
Jacket	Polyurethane, Red	0.394 in [10.01 mm]

Environmental Specifications

Temperature

Operating Range	-30 to +70 deg C

Click the following link (or enter part number in “SEARCH” on website) to obtain additional part information including price, inventory and certifications: 20kV Flexible RG213 High Voltage Coax Cable Single Shielded with Red PUR Jacket RG213HV

Pasternack Enterprises, Inc. • P.O. Box 16759, Irvine, CA 92623
Phone: (866) 727-8376 or (949) 261-1920 • **Fax:** (949) 261-7451
Sales@Pasternack.com • Techsupport@Pasternack.com

© 2020 Pasternack Enterprises All Rights Reserved

20kV Flexible RG213 High Voltage Coax Cable Single Shielded with Red PUR Jacket

Compliance Certifications (see product page for current document)

Plotted and Other Data

Notes:

- 1) All tests preformed in accordacne with MIL-DTL-17 (current issue).
  2) All materials are RoHS and REACH compliant.

20kV Flexible RG213 High Voltage Coax Cable Single Shielded with Red PUR Jacket from Pasternack Enterprises has same day shipment for domestic and International orders. Our RF, microwave and millimeter wave products maintain a 99.4% availability and are part of the broadest selection in the industry.

Click the following link (or enter part number in “SEARCH” on website) to obtain additional part information including price, inventory and certifications: 20kV Flexible RG213 High Voltage Coax Cable Single Shielded with Red PUR Jacket RG213HV

URL: https://www.pasternack.com/flexible-rg213-polyurethane-jacket-tinned-copper-braid-outer-conductor-single-shielded-rg213hv-p.aspx

The information contained in this document is accurate to the best of our knowledge and representative of the part described herein. It may be necessary to make modifications to the part and/or the documentation of the part, in order to implement improvements. Pasternack reserves the right to make such changes as required. Unless otherwise stated, all specifications are nominal. Pasternack does not make any representation or warranty regarding the suitability of the part described herein for any particular purpose, and Pasternack does not assume any liability arising out of the use of any part or documentation.

Pasternack Enterprises, Inc. • P.O. Box 16759, Irvine, CA 92623
Phone: (866) 727-8376 or (949) 261-1920 • **Fax:** (949) 261-7451
Sales@Pasternack.com • Techsupport@Pasternack.com

© 2020 Pasternack Enterprises All Rights Reserved

RG213HV CAD Drawing

20kV Flexible RG213 High Voltage Coax Cable Single Shielded with Red PUR Jacket

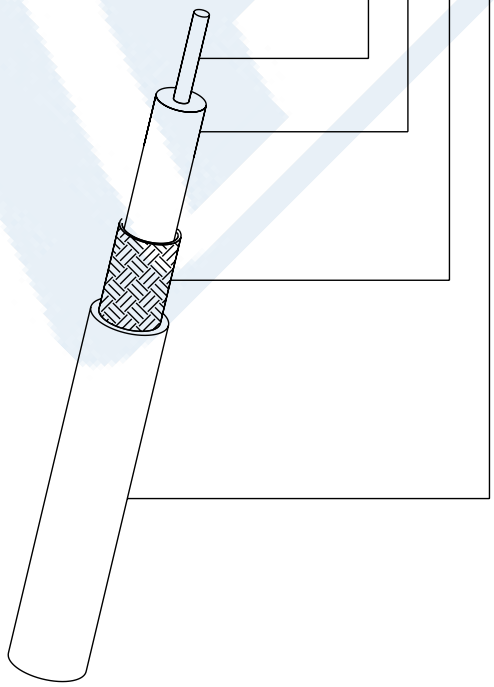

Center Conductor	Ø.0886 [2.25]	7 Strand Bare Copper
Dielectric	Ø.286 [7.26]	Solid Polyethylene
Braid	Ø.317 [8.05]	Copper Braid
Jacket	Ø.394 [10.01]	Red PUR

REVISION				
ZONE	REV	DESCRIPTION	DATE	CHANGED BY	APPROVED
	A	INITIAL RELEASE	05/05/2023	PSRINIVAS	AGANWANI

UNLESS OTHERWISE SPECIFIED
LEADING DIMENSIONS ARE INCHES
DIMENSIONS IN [ ] ARE MILLIMETERS

TOLERANCES:
.X = ± .2 [.5]
.XX = ± .02 [.5]
.XXX = ± .005 [.13]
FRACTIONS ± 1/32
ANGLES ± 1°

CABLE LENGTH TOLERANCES:
≤12 [305] = +1 [25] / -0
>12 [305] ≤ 60 [1524] = +2 [51] / -0
>60 [1524] ≤ 120 [3048] = +4 [102] / -0
>120 [3048] ≤ 300 [7620] = +6 [152] / -0
>300 [7620] = +5% / -0

ALL DIMENSIONS ARE FOR REFERENCE ONLY AND SUBJECT TO CHANGE WITHOUT NOTICE.

PASTERNACK® an INFINITE brand

Website: www.Pasternack.com
Phone: 1.866.727.8376 | 1.949.261.1920

INTERPRET ALL DIMENSIONS AND TOLERANCES PER ASME Y14.5

SCALE: NONE | SHEET: 1 OF 1

DESCRIPTION: Flexible RG213 High Voltage Coax Cable Single Shielded with Red PUR Jacket

SIZE	CAGE CODE	DRAWN BY	ITEM NO.	REV
A	53919	PSRINIVAS	RG213HV	A

THE INFORMATION CONTAINED IN THIS DRAWING IS THE SOLE PROPERTY OF INFINITE ELECTRONICS, INC. ANY REPRODUCTION IN PART OR WHOLE WITHOUT THE WRITTEN PERMISSION OF INFINITE ELECTRONICS, INC. IS PROHIBITED. THESE COMMODITIES, TECHNOLOGY OR SOFTWARE WERE EXPORTED FROM THE UNITED STATES IN ACCORDANCE WITH THE EXPORT ADMINISTRATION REGULATIONS. DIVERSION CONTRARY TO U.S. LAW PROHIBITED.

T-Rev.D2

© 2020 Pasternack Enterprises All Rights Reserved