2.92mm Male Right Angle Connector Clamp/Solder Attachment for PE-034SR, .034 Semi-Rigid

PE51265

Configuration
- 2.92mm Male Connector
- 50 Ohms
- Right Angle Body Geometry
- Connector Interface Types: PE-034SR, .034 Semi-Rigid

Features
- Max. Operating Frequency 40 GHz
- Good VSWR of 1.35:1
- Gold over Nickel Plated Beryllium Copper Contact

Applications
- General Purpose Test
- Custom Cable Assemblies

Description

Pasternack's PE51265 Right Angle, 2.92mm, Standard, Connector is part of our full line of RF components available for same-day shipping. Our 2.92mm male connector operates up to a maximum frequency of 40 GHz and offers good VSWR of 1.35:1. Its right angle body geometry allows for easier connections in tight spaces.

Our 2.92mm male right angle connector PE51265 datasheet specifications and drawing with dimensions are shown below in this PDF. Pasternack's broad catalog of RF, microwave and millimeter wave connectors allows designers to configure and customize their signal connections however they like. Whether the need is to provide an I/O for a board design, or simply create a custom cable assembly configuration, Pasternack has the right connector for the job. Pasternack can also expertly build your custom cable assemblies for you and ship same-day.

Electrical Specifications

Description	Minimum	Typical	Maximum	Units
Frequency Range	DC		40	GHz
VSWR			1.35:1	
Insertion Loss			0.252	dB
Operating Voltage (AC)			250	Vrms
Dielectric Withstanding Voltage (AC)			750	Vrms
Inner Conductor DC Resistance			3	mOhms
Outer Conductor DC Resistance			2	mOhms
Insulation Resistance	5,000			MOhms
RF Leakage	100			dB
Impedance		50		Ohms

Electrical Specification Notes:
Insertion loss is = 0.04*SQRT(F(GHz) dB

Mechanical Specifications

Size

Length	0.704724 in [17.9 mm]
Width	0.291339 in [7.4 mm]
Height	0.80315 in [20.4 mm]
Weight	0.015 lbs [6.8 g]
Mating Cycles	500 Cycles

© 2023 Infinite Electronics, Inc. Pasternack is a registered trademark of Infinite Electronics, Inc.
+1 (866) 558-2786 | sales@pasternack.com | pasternack.com

2.92mm Male Right Angle Connector Clamp/Solder Attachment for PE-034SR, .034 Semi-Rigid

PE51265

Mating Torque	11.47 to 15 in-lbs [[1.30 to 1.70 Nm]]
Cable Retention Force	4.9 lbs [2.22 kg]

Material Specifications

Description	Material	Plating
Contact	Beryllium Copper	Gold over Nickel
Insulation	PPO	
Body	Stainless Steel	Passivated
Coupling Nut	Stainless Steel	Passivated
Retaining Ring	Beryllium Copper	Copper-Tin-Zinc Alloy
Gasket	Silicone	
Solder Sleeve	Brass	Gold over Nickel

Environmental Specifications

Temperature

Operating Range	-55 to +105 deg C
Thermal Shock	MIL-STD-202, Method 107, Condition B

Compliance Certifications (see product page for current document)

Plotted and Other Data

Notes:

2.92mm Male Right Angle Connector Clamp/Solder Attachment for PE-034SR, .034 Semi-Rigid from Pasternack Enterprises has same day shipment for domestic and International orders. Our RF, microwave and millimeter wave products maintain a 99.4% availability and are part of the broadest selection in the industry.

Click the following link (or enter part number in "SEARCH" on website) to obtain additional part information including price, inventory and certifications: 2.92mm Male Right Angle Connector Clamp/Solder Attachment for PE-034SR, .034 Semi-Rigid PE51265

URL: https://www.pasternack.com/2.92mm-male-pe-034sr-.034-semi-rigid-connector-pe51265-p.aspx

The information contained within this document is accurate to the best of our knowledge and representative of the part described herein. It may be necessary to make modifications to the part and/or the documentation of the part in order to impliment improvements. Pasternack Enterprises reserves the right to make such changes as required. Unless otherwise stated, all specifications are nominal. Pasternack Enterprises does not make any representation or warranty regarding the suitability of the part described herein for any particular purpose, and Pasternack Enterprises does not assume liability arising out of the use of any part or document.

© 2023 Infinite Electronics, Inc. Pasternack is a registered trademark of Infinite Electronics, Inc.

PE51265 CAD Drawing

2.92mm Male Right Angle Connector Clamp/Solder Attachment for PE-034SR, .034 Semi-Rigid

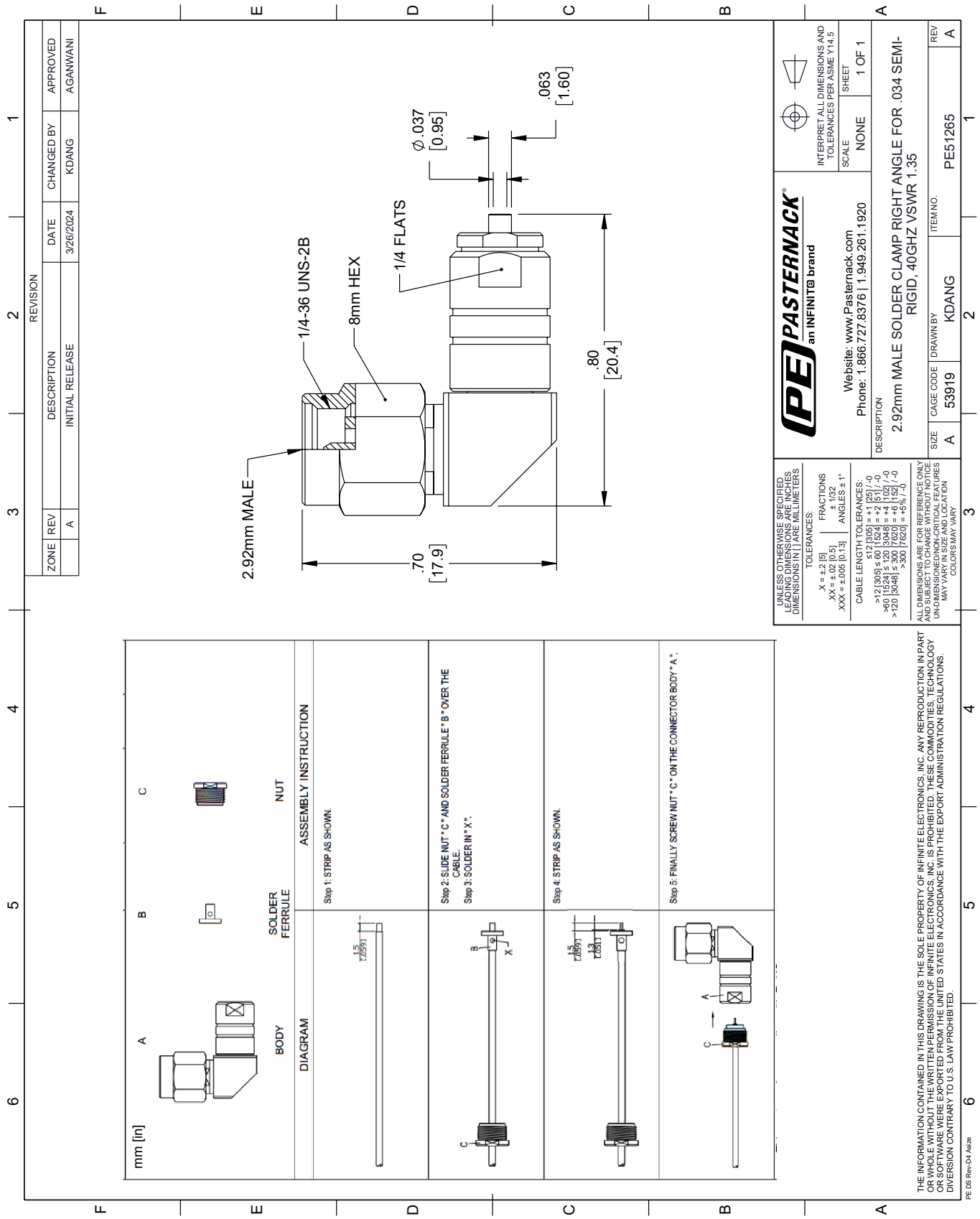

© 2023 Infinite Electronics, Inc. Pasternack is a registered trademark of Infinite Electronics, Inc.

Mini SMP Female Right Angle Connector Solder Attachment for PE-034SR, .034 Semi-Rigid

PE51270

Configuration
- Mini SMP Female Connector
- 50 Ohms
- Right Angle Body Geometry
- Connector Interface Types: PE-034SR, .034 Semi-Rigid

Features
- Max. Operating Frequency 18 GHz
- Excellent VSWR of 1.25:1
- Gold over Nickel Plated Beryllium Copper Contact
- Blind Mate Connector

Applications
- General Purpose Test
- Custom Cable Assemblies

Description

Pasternack's PE51270 Right Angle, Mini SMP, Standard, Connector is part of our full line of RF components available for same-day shipping. Our Mini SMP female connector operates up to a maximum frequency of 18 GHz and offers excellent VSWR of 1.25:1. The Pasternack blind mate connector is ideal for applications where direct visual or tactile access to the connection point is not possible, for example, when two circuit boards need to be mated. Its right angle body geometry allows for easier connections in tight spaces.

Our Mini SMP female right angle connector PE51270 datasheet specifications and drawing with dimensions are shown below in this PDF. Pasternack's broad catalog of RF, microwave and millimeter wave connectors allows designers to configure and customize their signal connections however they like. Whether the need is to provide an I/O for a board design, or simply create a custom cable assembly configuration, Pasternack has the right connector for the job. Pasternack can also expertly build your custom cable assemblies for you and ship same-day.

Electrical Specifications

Description	Minimum	Typical	Maximum	Units
Frequency Range	DC		18	GHz
VSWR			1.25:1	
Insertion Loss			0.424	dB
Dielectric Withstanding Voltage (DC)			325	Vdc
Inner Conductor DC Resistance			6	mOhms
Outer Conductor DC Resistance			2	mOhms
Insulation Resistance	5,000			MOhms
Impedance		50		Ohms

Electrical Specification Notes:
Insertion loss is = 0.1*SQRT(F(GHz) dB

Mechanical Specifications

Size

Length	0.155512 in [3.95 mm]
Width	0.155512 in [3.95 mm]
Height	0.25 in [6.35 mm]
Weight	0.015 lbs [6.8 g]
Engagement Force	3.5lbs [1.59kg]
Disengagement Force	5lbs [2.27kg]

© 2023 Infinite Electronics, Inc. Pasternack is a registered trademark of Infinite Electronics, Inc.
+1 (866) 558-2786 | sales@pasternack.com | pasternack.com

Mini SMP Female Right Angle Connector Solder Attachment for PE-034SR, .034 Semi-Rigid

PE51270

Material Specifications

Description	Material	Plating
Contact	Beryllium Copper	Gold over Nickel
Insulation	Teflon	
Body	Beryllium Copper	Gold over Nickel

Mechanical Specification Notes:
Mating cycles: 1000 (smooth bore), 100 (full detent) minimum.

Environmental Specifications

Temperature

Operating Range	-65 to +165 deg C
Thermal Shock	MIL-STD-202, Method 107, Condition B

Compliance Certifications (see product page for current document)

Plotted and Other Data

Notes:

Mini SMP Female Right Angle Connector Solder Attachment for PE-034SR, .034 Semi-Rigid from Pasternack Enterprises has same day shipment for domestic and International orders. Our RF, microwave and millimeter wave products maintain a 99.4% availability and are part of the broadest selection in the industry.

Click the following link (or enter part number in "SEARCH" on website) to obtain additional part information including price, inventory and certifications: Mini SMP Female Right Angle Connector Solder Attachment for PE-034SR, .034 Semi-Rigid PE51270

URL: https://www.pasternack.com/mini-smp-female-pe-034sr-.034-semi-rigid-connector-pe51270-p.aspx

The information contained within this document is accurate to the best of our knowledge and representative of the part described herein. It may be necessary to make modifications to the part and/or the documentation of the part in order to impliment improvements. Pasternack Enterprises reserves the right to make such changes as required. Unless otherwise stated, all specifications are nominal. Pasternack Enterprises does not make any representation or warranty regarding the suitability of the part described herein for any particular purpose, and Pasternack Enterprises does not assume liability arising out of the use of any part or document.

© 2023 Infinite Electronics, Inc. Pasternack is a registered trademark of Infinite Electronics, Inc.

PE51270 CAD Drawing

Mini SMP Female Right Angle Connector Solder Attachment for PE-034SR, .034 Semi-Rigid

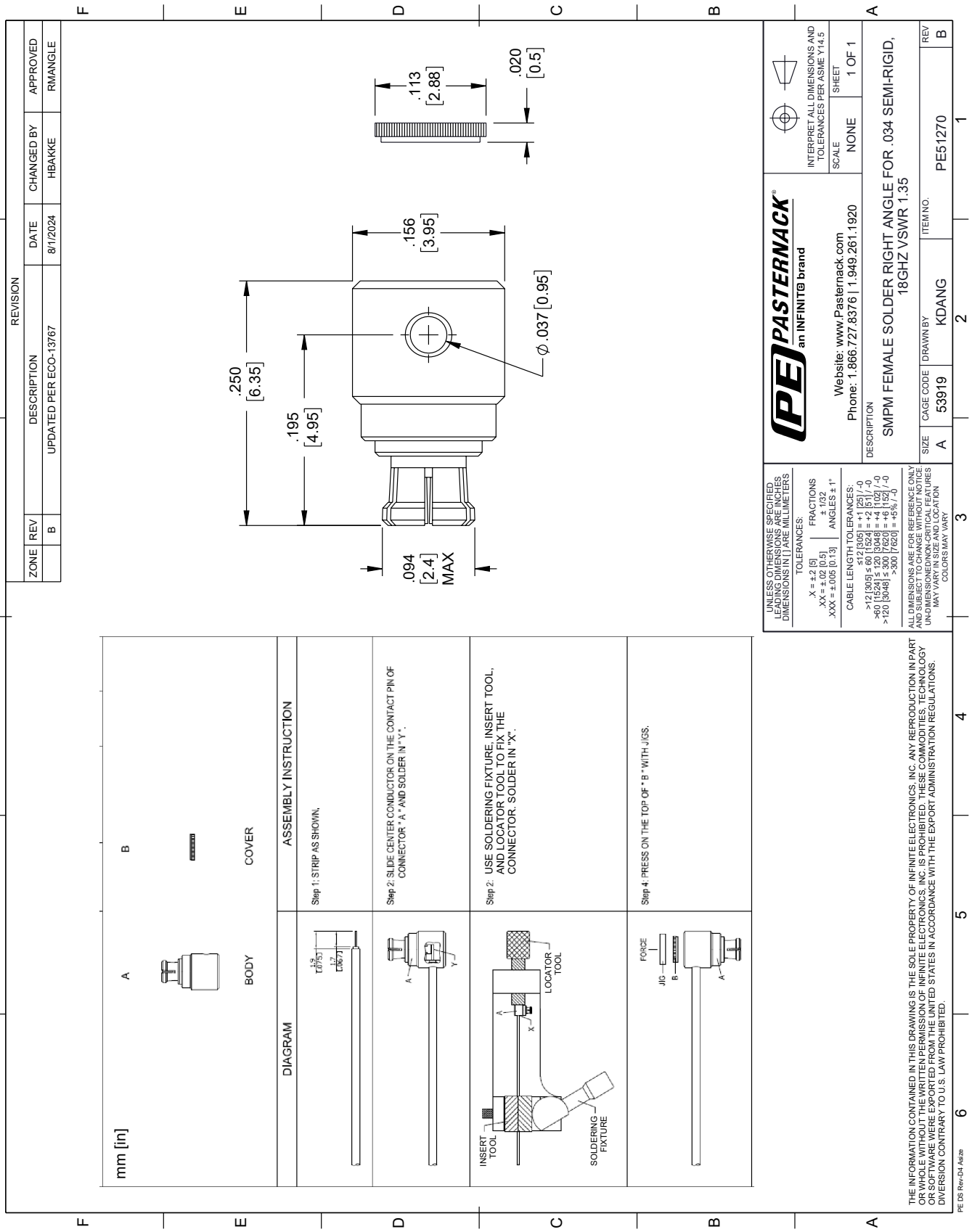

© 2023 Infinite Electronics, Inc. Pasternack is a registered trademark of Infinite Electronics, Inc.

PASTERNACK®
www.pasternack.com

034 Semi-rigid Coax Cable with Copper Outer Conductor

TECHNICAL DATA SHEET PE-034SR

034 Semi-rigid Coax Cable with Copper Outer Conductor

Configuration

Inner Conductor Material and Plating	Copper Clad Steel, Silver
Dielectric Type	PTFE
Shield Materials	Copper
Jacket Material and Color	Tan

Electrical Specifications

Impedance, Ohms	50
Maximum Operating Frequency, GHz	40
Maximum Operating Voltage, Volts	2,000

Electrical Specifications by Frequency

Frequency 1

Frequency, MHz	1000
Attenuation, dB/100ft [dB/100m]	60 [196.85]
Power Handling, Watts	10

Frequency 2

Frequency, GHz	10
Attenuation, dB/100ft [dB/100m]	190 [623.36]
Power Handling, Watts	3.1

Frequency 3

Frequency, GHz	20
Attenuation, dB/100ft [dB/100m]	280 [918.64]
Power Handling, Watts	2

Mechanical Specifications

Temperature

Operating Range, deg C	-55 to +100

Inner Conductor

Number of Strands	1
Material	Copper Clad Steel
Plating	Silver
Diameter, in [mm]	0.008 [0.2]

Dielectric:

Type	PTFE
Diameter, in [mm]	0.026 [0.66]

Click the following link (or enter part number in “SEARCH” on website) to obtain additional part information including price, inventory and certifications: 034 Semi-rigid Coax Cable with Copper Outer Conductor PE-034SR

The information contained in this document is accurate to the best of our knowledge and representative of the part described herein. It may be necessary to make modifications to the part and/or the documentation of the part, in order to implement improvements. Pasternack reserves the right to make such changes as required. Unless otherwise stated, all specifications are nominal.

Pasternack Enterprises, Inc. • P.O. Box 16759, Irvine, CA 92623
Phone: (866) 727-8376 or (949) 261-1920 • **Fax:** (949) 261-7451
Sales@Pasternack.com • Techsupport@Pasternack.com

© 2013 Pasternack Enterprises All Rights Reserved

034 Semi-rigid Coax Cable with Copper Outer Conductor

TECHNICAL DATA SHEET PE-034SR

Shield:

Number of	1
Material 1	Copper
Diameter, in [mm]	0.034 [0.86]

Jacket:

Color	Tan
One Time Minimum Bend Radius, in [mm]	0.5 [12.7]
Weight, lbs/ft [Kg/m]	0.002 [0]

Compliance Certifications (visit www.Pasternack.com for current document)

RoHS Compliant	Yes

Plotted and Other Data

Notes:	Values at 25 °C, sea level

034 Semi-rigid Coax Cable with Copper Outer Conductor from Pasternack Enterprises has same day shipment for domestic and International orders. Our RF, microwave and fiber optic products maintain a 99% availability and are part of the broadest selection in the industry.

Click the following link (or enter part number in “SEARCH” on website) to obtain additional part information including price, inventory and certifications: 034 Semi-rigid Coax Cable with Copper Outer Conductor PE-034SR

URL: http://www.pasternack.com/semirigid-0.034-50-ohm-coax-cable-copper-pe-034sr-p.aspx

The information contained in this document is accurate to the best of our knowledge and representative of the part described herein. It may be necessary to make modifications to the part and/or the documentation of the part, in order to implement improvements. Pasternack reserves the right to make such changes as required. Unless otherwise stated, all specifications are nominal.

Pasternack Enterprises, Inc. • P.O. Box 16759, Irvine, CA 92623
Phone: (866) 727-8376 or (949) 261-1920 • **Fax:** (949) 261-7451
Sales@Pasternack.com • Techsupport@Pasternack.com

© 2013 Pasternack Enterprises All Rights Reserved

PE-034SR CAD Drawing

034 Semi-rigid Coax Cable with Copper Outer Conductor

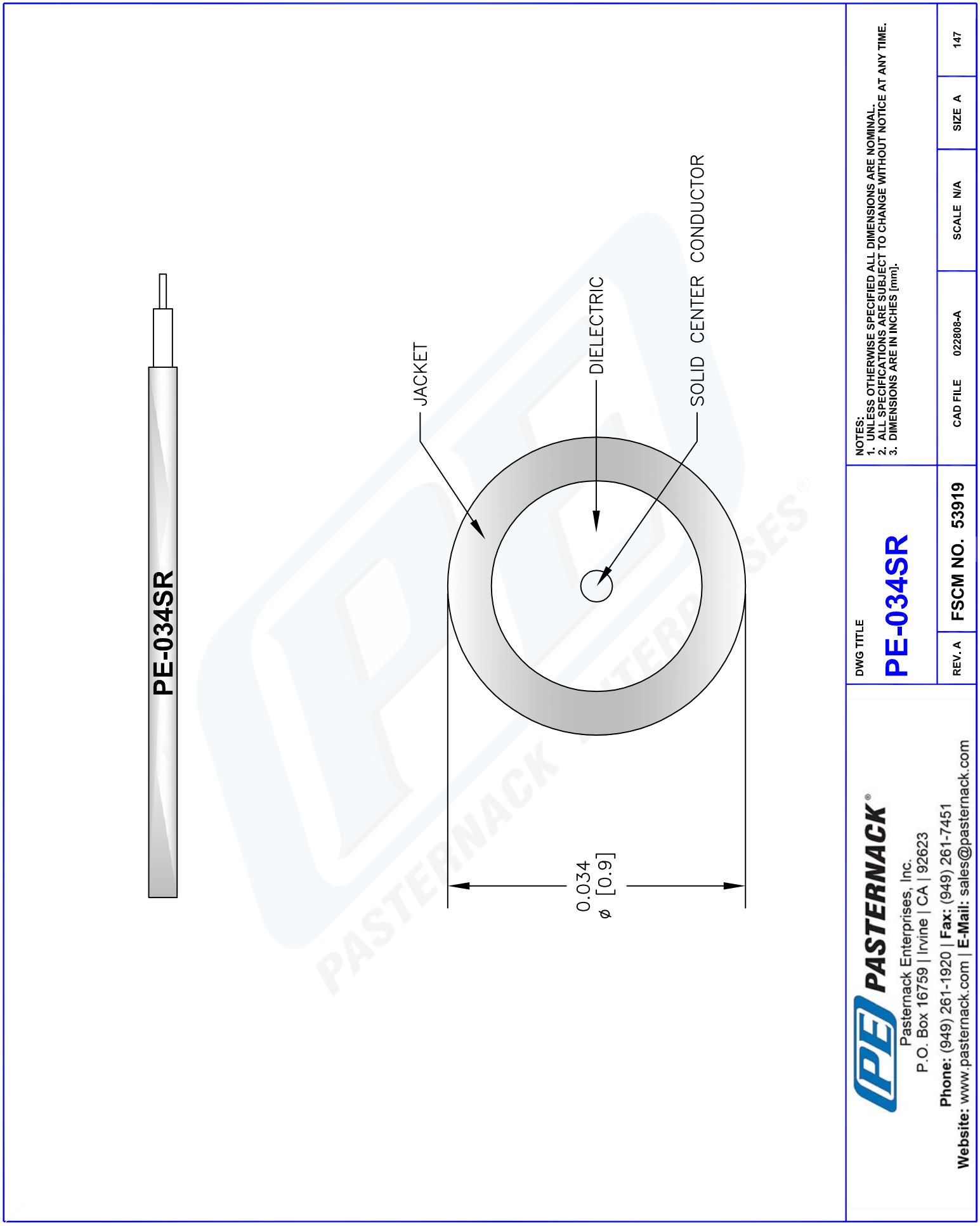

© 2013 Pasternack Enterprises All Rights Reserved