PASTERNACK®
THE ENGINEER'S RF SOURCE

FAKRA Plug Connector Crimp/Solder Attachment for RG174, RG316, RG188, .100 inch, PE-B100, PE-C100, LMR-100, Water Blue Color

Configuration

- FAKRA Plug Connector
- 50 Ohms
- Straight Body Geometry
- RG174, RG316, RG188, .100 inch, PE-B100, PE-C100, LMR-100 Interface Type
- Crimp/Solder Attachment

Features

- Max. Operating Frequency 4 GHz
- Good VSWR of 1.3:1
- Gold Plated Phosphor Bronze Contact

Applications

- General Purpose Test
- Custom Cable Assemblies

Description

Pasternack's PE45404Z FAKRA plug connector with crimp/solder attachment for RG174, RG316, RG188, .100 inch, PE-B100, PE-C100 and LMR-100 is part of our full line of RF components available for same-day shipping. Our FAKRA plug connector operates up to a maximum frequency of 4 GHz and offers good VSWR of 1.3:1.

Our FAKRA plug connector PE45404Z datasheet specifications and drawing with dimensions are shown below in this PDF. Pasternack's broad catalog of RF, microwave and millimeter wave connectors allows designers to configure and customize their signal connections however they like. Whether the need is to provide an I/O for a board design, or simply create a custom cable assembly configuration, Pasternack has the right connector for the job. Pasternack can also expertly build your custom cable assemblies for you and ship same-day.

Electrical Specifications

Description	Minimum	Typical	Maximum	Units
Frequency Range	DC		4	GHz
VSWR			1.3:1	
Operating Voltage (AC)			335	Vrms
Dielectric Withstanding Voltage (AC)			800	Vrms
Inner Conductor DC Resistance			6	mOhms
Outer Conductor DC Resistance			2.5	mOhms
Insulation Resistance	1,000			MOhms

Mechanical Specifications

Size

Length	0.035 in [0.89 mm]
Width/Dia.	0.37 in [9.40 mm]
Height	0.433 in [11 mm]

Click the following link (or enter part number in "SEARCH" on website) to obtain additional part information including price, inventory and certifications: FAKRA Plug Connector Crimp/Solder Attachment for RG174, RG316, RG188, .100 inch, PE-B100, PE-C100, LMR-100, Water Blue Color PE45404Z

Pasternack Enterprises, Inc. • P.O. Box 16759, Irvine, CA 92623
Phone: (866) 727-8376 or (949) 261-1920 • **Fax:** (949) 261-7451
Sales@Pasternack.com • Techsupport@Pasternack.com

© 2017 Pasternack Enterprises All Rights Reserved

FAKRA Plug Connector Crimp/Solder Attachment for RG174, RG316, RG188, .100 inch, PE-B100, PE-C100, LMR-100, Water Blue Color

Material Specifications

Description	Material	Plating
Contact	Phosphor Bronze	Gold
Insulation	PTFE	
Outer Conductor	Brass	Nickel
Body	Plastic	

Environmental Specifications

Temperature

Operating Range -40 to +85 deg C

Compliance Certifications (see product page for current document)

Plotted and Other Data

Notes:

Click the following link (or enter part number in "SEARCH" on website) to obtain additional part information including price, inventory and certifications: FAKRA Plug Connector Crimp/Solder Attachment for RG174, RG316, RG188, .100 inch, PE-B100, PE-C100, LMR-100, Water Blue Color PE45404Z

Pasternack Enterprises, Inc. • P.O. Box 16759, Irvine, CA 92623
Phone: (866) 727-8376 or (949) 261-1920 • **Fax:** (949) 261-7451
Sales@Pasternack.com • Techsupport@Pasternack.com

© 2017 Pasternack Enterprises All Rights Reserved

FAKRA Plug Connector Crimp/Solder Attachment for RG174, RG316, RG188, .100 inch, PE-B100, PE-C100, LMR-100, Water Blue Color

Assembly Instruction

*

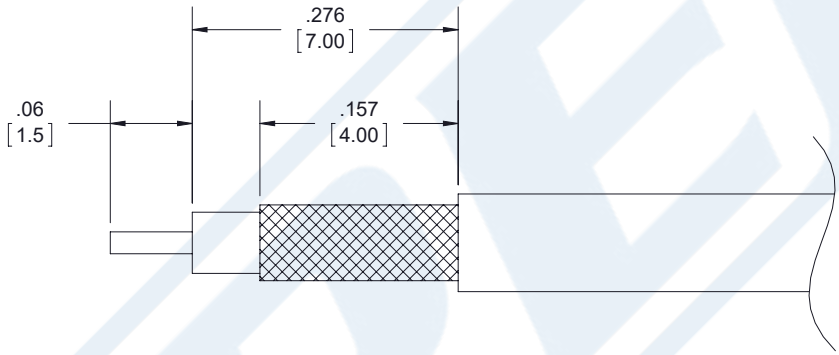

ASSEMBLY PROCEDURES

1. STRIP CABLE TO THE DIMENSIONS SHOWN, DO NOT NICK CENTER CONDUCTOR OR BRAID.
2. PUSH CENTER CONDUCTOR FULLY INTO CONTACT AND SOLDER, REMOVE ANY EXCESS SOLDER.
3. FLARE BRAID AND INSERT CONTACT INTO THE BODY UNTIL IT SEATS.
4. SLIDE FERRULE OVER BRAID AND CRIMP WITH CRIMP TOOL.

CRIMP SIZE REQUIRED

- CONTACT: SOLDER.
- FERRULE: .128 HEX CRIMP TOOL.

Click the following link (or enter part number in "SEARCH" on website) to obtain additional part information including price, inventory and certifications: FAKRA Plug Connector Crimp/Solder Attachment for RG174, RG316, RG188, .100 inch, PE-B100, PE-C100, LMR-100, Water Blue Color PE45404Z

Pasternack Enterprises, Inc. • P.O. Box 16759, Irvine, CA 92623
Phone: (866) 727-8376 or (949) 261-1920 • **Fax:** (949) 261-7451
Sales@Pasternack.com • Techsupport@Pasternack.com

© 2017 Pasternack Enterprises All Rights Reserved

FAKRA Plug Connector Crimp/Solder Attachment for RG174, RG316, RG188, .100 inch, PE-B100, PE-C100, LMR-100, Water Blue Color

RF Connectors Technical Data Sheet PE45404Z

FAKRA Plug Connector Crimp/Solder Attachment for RG174, RG316, RG188, .100 inch, PE-B100, PE-C100, LMR-100, Water Blue Color from Pasternack Enterprises has same day shipment for domestic and International orders. Our RF, microwave and millimeter wave products maintain a 99.4% availability and are part of the broadest selection in the industry.

Click the following link (or enter part number in “SEARCH” on website) to obtain additional part information including price, inventory and certifications: FAKRA Plug Connector Crimp/Solder Attachment for RG174, RG316, RG188, .100 inch, PE-B100, PE-C100, LMR-100, Water Blue Color PE45404Z

URL: https://www.pasternack.com/fakra-plug-rg174-rg316-.100-pe-b100-pe-c100-connector-pe45404z-p.aspx

The information contained in this document is accurate to the best of our knowledge and representative of the part described herein. It may be necessary to make modifications to the part and/or the documentation of the part, in order to implement improvements. Pasternack reserves the right to make such changes as required. Unless otherwise stated, all specifications are nominal. Pasternack does not make any representation or warranty regarding the suitability of the part described herein for any particular purpose, and Pasternack does not assume any liability arising out of the use of any part or documentation.

Pasternack Enterprises, Inc. • P.O. Box 16759, Irvine, CA 92623
Phone: (866) 727-8376 or (949) 261-1920 • **Fax:** (949) 261-7451
Sales@Pasternack.com • Techsupport@Pasternack.com

© 2017 Pasternack Enterprises All Rights Reserved

PE45404Z CAD Drawing

FAKRA Plug Connector Crimp/Solder Attachment for RG174, RG316, RG188, .100 inch, PE-B100, PE-C100, LMR-100, Water Blue Color

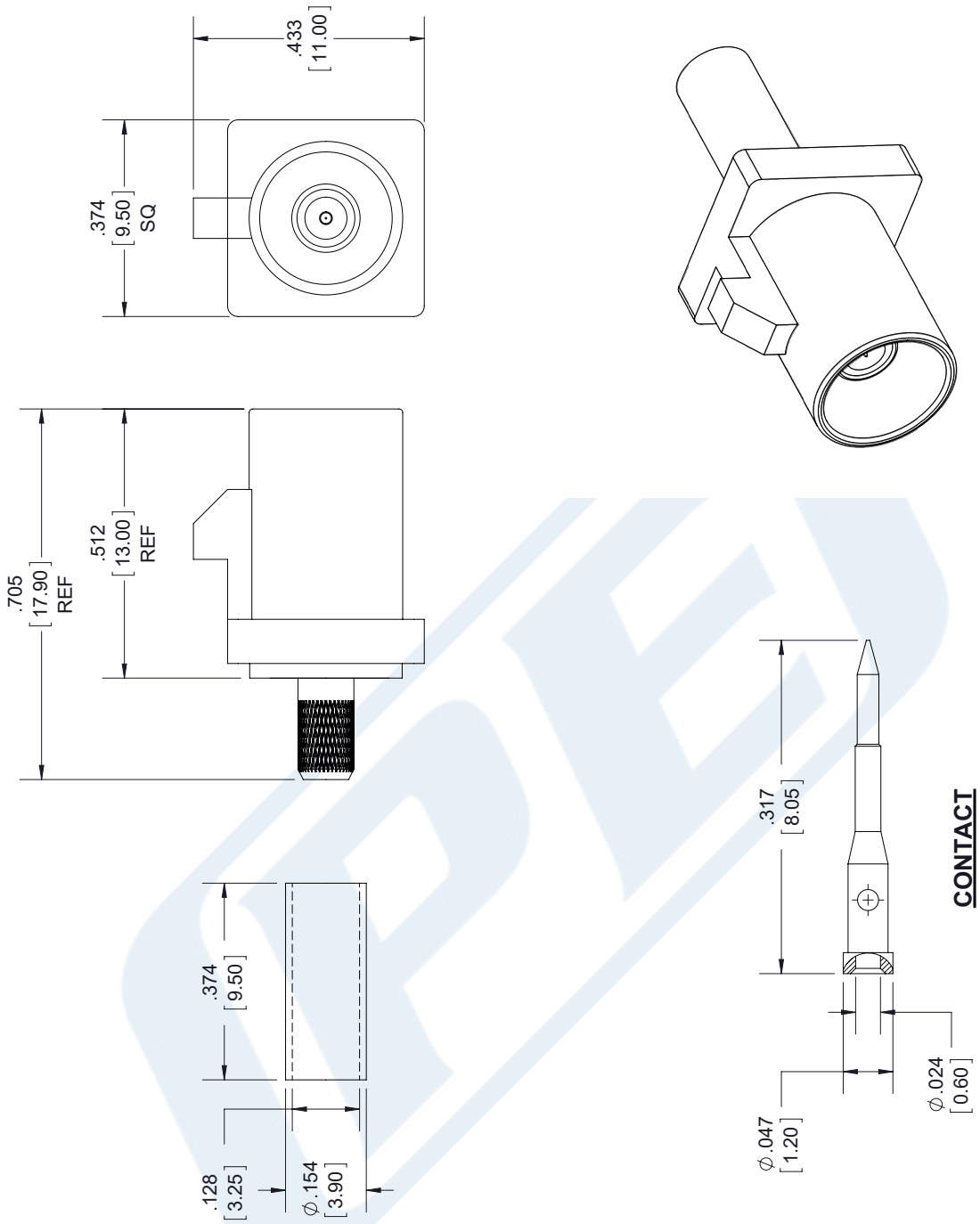

FAKRA CONFIGURATION

CODING	JACK	COLOR	APPLICATION
A		BLACK	RADIO WITH PHANTOM SUPPLY
B		WHITE	RADIO WITHOUT PHANTOM SUPPLY
C		BLUE	GPS: TELEMATICS OR NAVIGATION
D		BORDEAUX	GSM: CELLULAR PHONE
H		VIOLET	GPS: TELEMATICS AND NAVIGATION
I		BEIGE	BLUETOOTH
K		CURRY	RADIO WITH IF OUTPUT (ANTENNA DIVERSITY)
Z		WATER BLUE	NEUTRAL CODING

STANDARD TOLERANCES
.X ±0.2
.XX ±0.01
.XXX ±0.005

*STANDARD TOLERANCES APPLY ONLY TO DIMENSIONS IN INCHES

NOTES:
1. UNLESS OTHERWISE SPECIFIED ALL DIMENSIONS ARE NOMINAL.
2. ALL SPECIFICATIONS ARE SUBJECT TO CHANGE WITHOUT NOTICE AT ANY TIME
3. DIMENSIONS ARE IN INCHES [mm].

DWG TITLE PE45404Z

CAD FILE 082917 | SCALE N/A | SIZE A | 9999

CAGE CODE 53919

PASTERNACK® THE ENGINEER'S RF SOURCE
Pasternack Enterprises, Inc.
P.O. Box 16759 | Irvine | CA | 92623
Phone: (949) 261-1920 | **Fax:** (949) 261-7451
Website: www.pasternack.com | **E-Mail:** sales@pasternack.com

© 2017 Pasternack Enterprises All Rights Reserved

PASTERNACK®
THE ENGINEER'S RF SOURCE

RP TNC Female Connector Crimp/Solder Attachment for RG316, RG174, RG188, LMR-100, PE-B100, PE-C100, 0.100 inch

Configuration

- TNC Female Reverse Polarity Connector
- MIL-C-39012
- 50 Ohms
- Straight Body Geometry
- RG316, RG174, RG188, LMR-100, PE-B100, PE-C100, 0.100 inch Interface Type
- Crimp/Solder Attachment

Features

- Gold Plated Brass Contact
- 3 µin minimum contact plating
- Reverse Polarity

Applications

- General Purpose Test
- Custom Cable Assemblies

Description

Pasternack's PE4690 RP TNC female connector with crimp/solder attachment for RG316, RG174, RG188, LMR-100, PE-B100, PE-C100 and 0.100 inch is part of our full line of RF components available for same-day shipping. The female reverse polarity configuration uses a female connector body with a male inner contact pin.

Our reverse polarity TNC female connector PE4690 datasheet specifications and drawing with dimensions are shown below in this PDF. Pasternack's broad catalog of RF, microwave and millimeter wave connectors allows designers to configure and customize their signal connections however they like. Whether the need is to provide an I/O for a board design, or simply create a custom cable assembly configuration, Pasternack has the right connector for the job. Pasternack can also expertly build your custom cable assemblies for you and ship same-day.

Mechanical Specifications

Size

Length	1.288 in [32.72 mm]
Width/Dia.	0.45 in [11.43 mm]
Weight	0.02 lbs [9.07 g]

Material Specifications

Description	Material	Plating
Contact	Brass	Gold 3 µin minimum
Insulation	PTFE	
Body	Brass	Nickel 100 µin minimum

Click the following link (or enter part number in "SEARCH" on website) to obtain additional part information including price, inventory and certifications: RP TNC Female Connector Crimp/Solder Attachment for RG316, RG174, RG188, LMR-100, PE-B100, PE-C100, 0.100 inch PE4690

Pasternack Enterprises, Inc. • P.O. Box 16759, Irvine, CA 92623
Phone: (866) 727-8376 or (949) 261-1920 • **Fax:** (949) 261-7451
Sales@Pasternack.com • Techsupport@Pasternack.com

© 2016 Pasternack Enterprises All Rights Reserved

RP TNC Female Connector Crimp/Solder Attachment for RG316, RG174, RG188, LMR-100, PE-B100, PE-C100, 0.100 inch

Compliance Certifications (see product page for current document)

Plotted and Other Data

Notes:

RP TNC Female Connector Crimp/Solder Attachment for RG316, RG174, RG188, LMR-100, PE-B100, PE-C100, 0.100 inch from Pasternack Enterprises has same day shipment for domestic and International orders. Our RF, microwave and millimeter wave products maintain a 99% availability and are part of the broadest selection in the industry.

Click the following link (or enter part number in "SEARCH" on website) to obtain additional part information including price, inventory and certifications: RP TNC Female Connector Crimp/Solder Attachment for RG316, RG174, RG188, LMR-100, PE-B100, PE-C100, 0.100 inch PE4690

URL: https://www.pasternack.com/tnc-female-reverse-polarity-rg316-rg174-rg188-connector-pe4690-p.aspx

The information contained in this document is accurate to the best of our knowledge and representative of the part described herein. It may be necessary to make modifications to the part and/or the documentation of the part, in order to implement improvements. Pasternack reserves the right to make such changes as required. Unless otherwise stated, all specifications are nominal. Pasternack does not make any representation or warranty regarding the suitability of the part described herein for any particular purpose, and Pasternack does not assume any liability arising out of the use of any part or documentation.

Pasternack Enterprises, Inc. • P.O. Box 16759, Irvine, CA 92623
Phone: (866) 727-8376 or (949) 261-1920 • **Fax:** (949) 261-7451
Sales@Pasternack.com • Techsupport@Pasternack.com

© 2016 Pasternack Enterprises All Rights Reserved

PE4690 CAD Drawing

RP TNC Female Connector Crimp/Solder Attachment for RG316, RG174, RG188, LMR-100, PE-B100, PE-C100, 0.100 inch

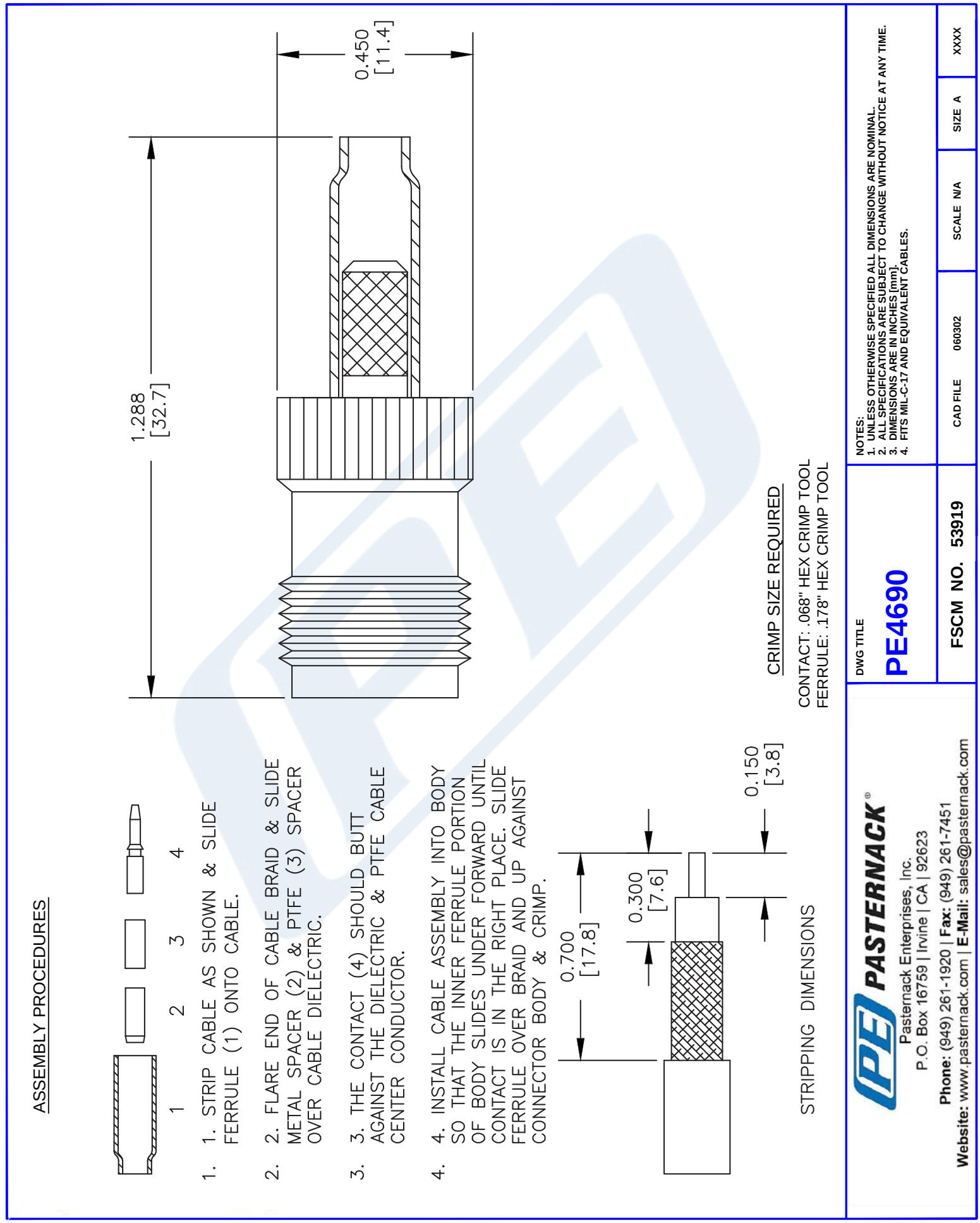

© 2016 Pasternack Enterprises All Rights Reserved

Low Loss Flexible LMR-100A-PVC Indoor/Outdoor Rated Coax Cable Double Shielded with Black PVC Jacket

LMR-100A-PVC

TIMES MICROWAVE SYSTEMS

Times Microwave Systems Connector Specification

Configuration

- Low Loss, Indoor/Outdoor Flexible Cable
- 2 Shield(s)

Features

- Max Operating Frequency of 8 GHz
- Low Loss Cable
- Phase Velocity 66% VoP

Applications

- Laboratory Applications
- General Purpose RF Interconnect

Description

LMR-100A-PVC part number from Pasternack is a LMR-100A-PVC coax cable that is flexible. Pasternack LMR-100A flexible coax cable is 50 Ohm and has a PE dielectric. Our LMR-100A coax is constructed with a 0.11 jacket made of PVC. LMR-100A coax has a shield count of 2, a RF shielding of 90 dB and the maximum frequency for this Pasternack cable is 8 GHz. LMR-100A coax cable has an attenuation at 1 GHz of 24 dB.

Pasternack LMR-100A-PVC coax cables are part of over 40,000 RF, microwave and millimeter wave components. LMR-100A cables and our other RF parts are available for same day shipping worldwide. Custom RF cable assemblies using LMR-100A or other coax can be built and shipped same day as well.

Electrical Specifications

Description	Minimum	Typical	Maximum	Units
Frequency Range	DC		8	GHz
Cutoff Frequency		90		GHz
Impedance		50		Ohms
Velocity of Propagation		66		%
Time Delay		1.54 [5.05]		ns/ft [ns/m]
Shielding Effectiveness	90			dB
Dielectric Withstanding Voltage (DC)			500	Vdc
Jacket Spark			2,000	Vrms
Inner Conductor DC Resistance			81	Ohms/1000ft
Outer Conductor DC Resistance			9.5	Ohms/1000ft
Nominal Capacitance		30.8 [101.05]		pF/ft [pF/m]
Nominal Inductance		0.077 [0.25]		uH/ft [uH/m]
Input Power (Peak)			600	Watts

© 2023 Infinite Electronics, Inc. Pasternack is a registered trademark of Infinite Electronics, Inc.
+1 (866) 558-2786 | sales@pasternack.com | pasternack.com

Low Loss Flexible LMR-100A-PVC Indoor/Outdoor Rated Coax Cable Double Shielded with Black PVC Jacket

LMR-100A-PVC

Performance by Frequency Band

Description	F1	F2	F3	F4	F5	Units
Frequency	50	150	220	450	900	MHz
Attenuation, Typ	3.9	8.9	10.9	15.8	22.8	dB/100ft
	12.8	29.2	35.76	51.84	74.8	dB/100m
Input Power (CW), Max	230	100	83	57	39	Watts

Description	F6	F7	F8	F9	F10	Units
Frequency	1.5	1.8	2	2.5	5.8	GHz
Attenuation, Typ	30.1	33.2	35.2	39.8	64.1	dB/100ft
	98.75	108.92	115.49	130.58	210.3	dB/100m
Input Power (CW), Max	29	27	25	22	13	Watts

Mechanical Specifications

Diameter	0.11 in [2.79 mm}
Weight	0.009 lbs/ft [0.01 kg/m]
Min. Bend Radius (Installation)	0.25 in [6.35 mm]
Min. Bend Radius (Repeated)	1 in [25.4 mm]
Bending Moment	0.1 lbs-ft [0.14 N-m]
Tensile Strength	15 lbs [6.8 kg]
Flat Plate Crush	10 lbs/in [0.18 kg/mm]

Construction Specifications

Description	Material and Plating	Diameter
Inner Conductor	Copper Clad Steel, 1 Strand	0.018 in [0.46 mm]
Conductor Type	Solid	
Dielectric	PE	0.06 in [1.52 mm]
First Shield	Aluminum Tape	
Second Shield	Tinned Copper Braid	
Jacket	PVC, Black	0.11 in [2.79 mm]

Environmental Specifications

Temperature

Operating Range	-40 to 85 deg C
Storage Range	-70 to 85 deg C

Compliance Certifications (see product page for current document)

Plotted and Other Data

Notes:

© 2023 Infinite Electronics, Inc. Pasternack is a registered trademark of Infinite Electronics, Inc.
+1 (866) 558-2786 | sales@pasternack.com | pasternack.com

Low Loss Flexible LMR-100A-PVC Indoor/Outdoor Rated Coax Cable Double Shielded with Black PVC Jacket

LMR-100A-PVC

Low Loss Flexible LMR-100A-PVC Indoor/Outdoor Rated Coax Cable Double Shielded with Black PVC Jacket from Pasternack Enterprises has same day shipment for domestic and International orders. Our RF, microwave and millimeter wave products maintain a 99.4% availability and are part of the broadest selection in the industry.

Click the following link (or enter part number in "SEARCH" on website) to obtain additional part information including price, inventory and certifications: Low Loss Flexible LMR-100A-PVC Indoor/Outdoor Rated Coax Cable Double Shielded with Black PVC Jacket LMR-100A-PVC

URL: https://www.pasternack.com/50-ohm-low-loss-flexible-lmr-100apvc-jacket-double-shielded-lmr-100a-pvc-p.aspx

The information contained within this document is accurate to the best of our knowledge and representative of the part described herein. It may be necessary to make modifications to the part and/or the documentation of the part in order to impliment improvements. Pasternack Enterprises reserves the right to make such changes as required. Unless otherwise stated, all specifications are nominal. Pasternack Enterprises does not make any representation or warranty regarding the suitability of the part described herein for any particular purpose, and Pasternack Enterprises does not assume liability arising out of the use of any part or document.

© 2023 Infinite Electronics, Inc. Pasternack is a registered trademark of Infinite Electronics, Inc.

LMR-100A-PVC CAD Drawing

Low Loss Flexible LMR-100A-PVC Indoor/Outdoor Rated Coax Cable Double Shielded with Black PVC Jacket

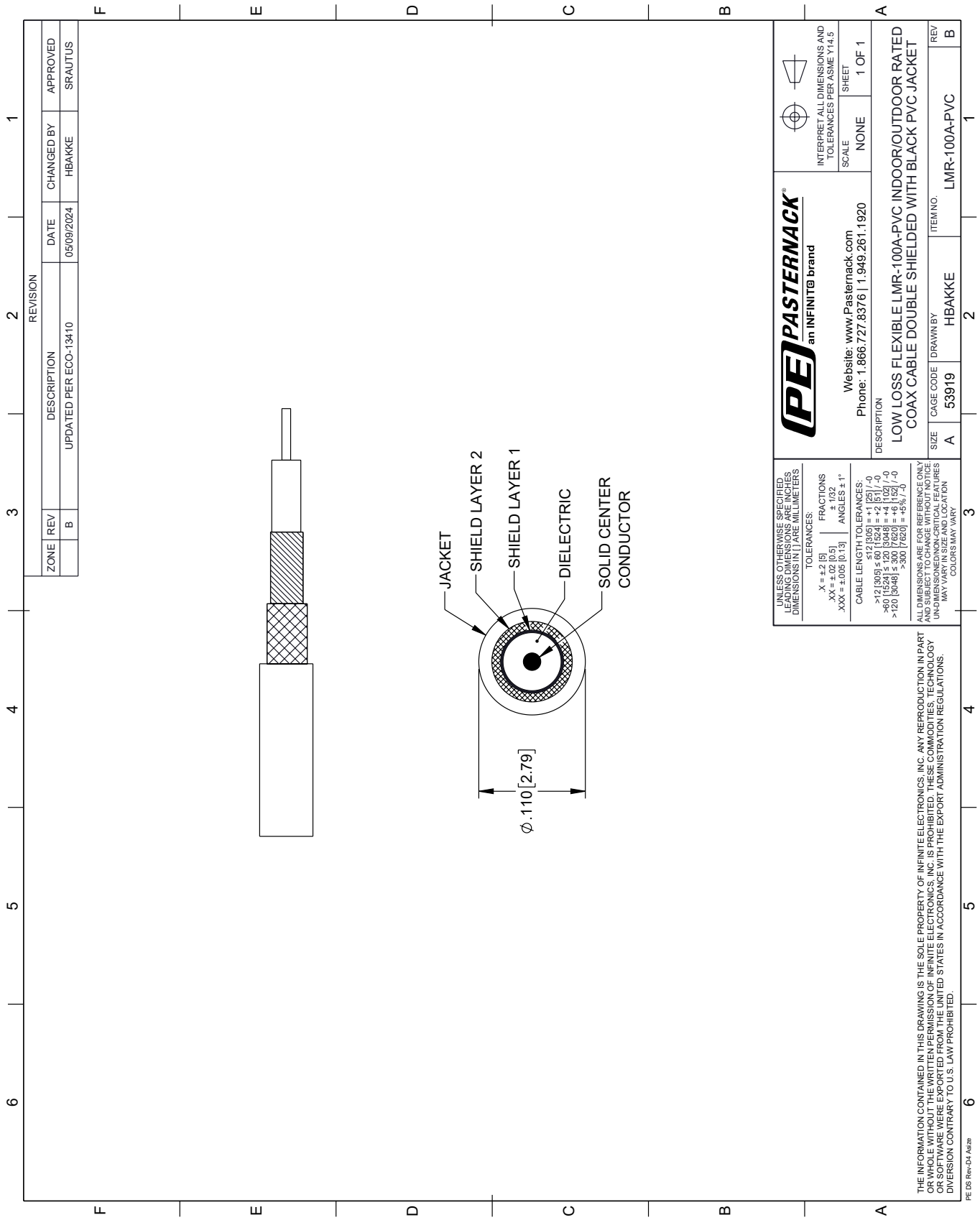

© 2023 Infinite Electronics, Inc. Pasternack is a registered trademark of Infinite Electronics, Inc.