3.5mm Male Connector Clamp/Solder Attachment for PE-047SR, PE-P047, PE-P047LL, PE-SR047AL, PE-SR047FL, .047 Semi-Rigid

PE51275

Configuration

- 3.5mm Male Connector
- 50 Ohms
- Straight Body Geometry
- Connector Interface Types: PE-047SR, PE-P047, PE-P047LL, PE-SR047AL, PE-SR047FL, .047 Semi-Rigid

Features

- Max. Operating Frequency 26.5 MHz
- Excellent VSWR of 1.25:1
- Gold over Nickel Plated Beryllium Copper Contact

Applications

- General Purpose Test
- Custom Cable Assemblies

Description

Pasternack's PE51275 , 3.5mm, Standard, Connector is part of our full line of RF components available for same-day shipping. Our 3.5mm male connector operates up to a maximum frequency of 26.5 MHz and offers excellent VSWR of 1.25:1.

Our 3.5mm male connector PE51275 datasheet specifications and drawing with dimensions are shown below in this PDF. Pasternack's broad catalog of RF, microwave and millimeter wave connectors allows designers to configure and customize their signal connections however they like. Whether the need is to provide an I/O for a board design, or simply create a custom cable assembly configuration, Pasternack has the right connector for the job. Pasternack can also expertly build your custom cable assemblies for you and ship same-day.

Electrical Specifications

Description	Minimum	Typical	Maximum	Units
Frequency Range	DC		26.5	MHz
VSWR			1.25:1	
Insertion Loss			0.154	dB
Operating Voltage (AC)			250	Vrms
Dielectric Withstanding Voltage (AC)			750	Vrms
Inner Conductor DC Resistance			3	mOhms
Outer Conductor DC Resistance			2	mOhms
RF Leakage	100			dB
Impedance		50		Ohms

Electrical Specification Notes:
Insertion loss is = 0.03*SQRT(F(GHz)) dB

Mechanical Specifications

Size

Length	0.314961 in [8 mm]
Width	0.314961 in [8 mm]
Height	0.633858 in [16.1 mm]
Weight	0.015 lbs [6.8 g]
Mating Cycles	500 Cycles
Mating Torque	7.1 to 15 in-lbs [[0.80 to 1.70 Nm]]
Cable Retention Force	6.1 lbs [2.77 kg]

© 2023 Infinite Electronics, Inc. Pasternack is a registered trademark of Infinite Electronics, Inc.
+1 (866) 558-2786 | sales@pasternack.com | pasternack.com

3.5mm Male Connector Clamp/Solder Attachment for PE-047SR, PE-P047, PE-P047LL, PE-SR047AL, PE-SR047FL, .047 Semi-Rigid

PE51275

Material Specifications

Description	Material	Plating
Contact	Beryllium Copper	Gold over Nickel
Insulation	PPO	
Body	Stainless Steel	Passivated
Coupling Nut	Stainless Steel	Passivated
Retaining Ring	Beryllium Copper	Copper-Tin-Zinc Alloy
Gasket	Silicone	
Solder Sleeve	Stainless Steel	Passivated

Environmental Specifications

Temperature

Operating Range	-55 to +105 deg C
Thermal Shock	MIL-STD-202, Method 107, Condition B

Compliance Certifications (see product page for current document)

Plotted and Other Data

Notes:

3.5mm Male Connector Clamp/Solder Attachment for PE-047SR, PE-P047, PE-P047LL, PE-SR047AL, PE-SR047FL, .047 Semi-Rigid from Pasternack Enterprises has same day shipment for domestic and International orders. Our RF, microwave and millimeter wave products maintain a 99.4% availability and are part of the broadest selection in the industry.

Click the following link (or enter part number in "SEARCH" on website) to obtain additional part information including price, inventory and certifications: 3.5mm Male Connector Clamp/Solder Attachment for PE-047SR, PE-P047, PE-P047LL, PE-SR047AL, PE-SR047FL, .047 Semi-Rigid PE51275

URL: https://www.pasternack.com/3.5mm-male-pe-047sr-pe-p047-pe-sr047al-connector-pe51275-p.aspx

The information contained within this document is accurate to the best of our knowledge and representative of the part described herein. It may be necessary to make modifications to the part and/or the documentation of the part in order to impliment improvements. Pasternack Enterprises reserves the right to make such changes as required. Unless otherwise stated, all specifications are nominal. Pasternack Enterprises does not make any representation or warranty regarding the suitability of the part described herein for any particular purpose, and Pasternack Enterprises does not assume liability arising out of the use of any part or document.

© 2023 Infinite Electronics, Inc. Pasternack is a registered trademark of Infinite Electronics, Inc.

PE51275 CAD Drawing

3.5mm Male Connector Clamp/Solder Attachment for PE-047SR, PE-P047, PE-P047LL, PE-SR047AL, PE-SR047FL, .047 Semi-Rigid

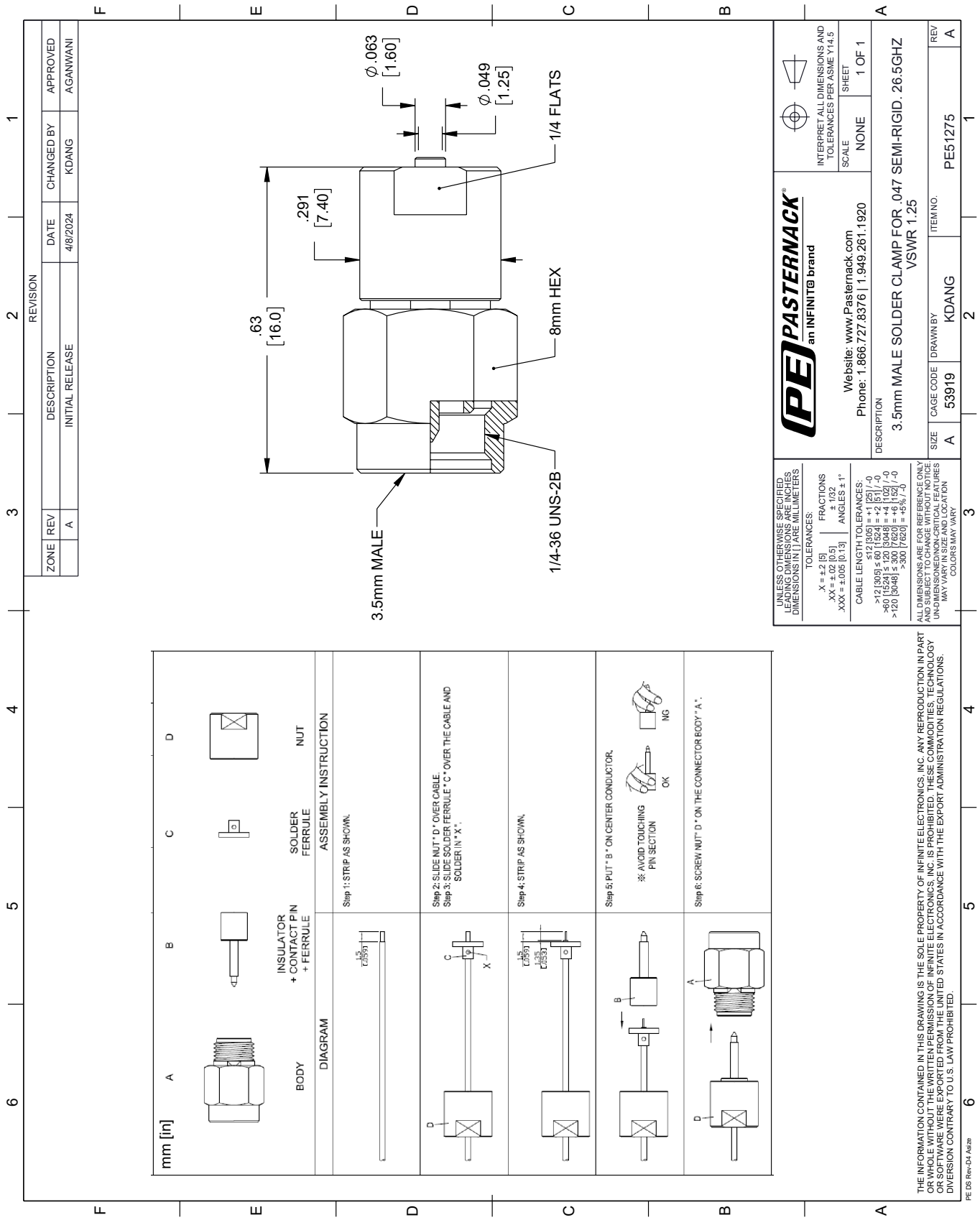

© 2023 Infinite Electronics, Inc. Pasternack is a registered trademark of Infinite Electronics, Inc.

SMA Female Bulkhead Mount Connector Solder Attachment for PE-047SR, PE-P047, PE-P047LL, PE-SR047AL, PE-SR047FL, .047 Semi-Rigid

PE51271

Configuration

- SMA Female Connector
- 50 Ohms
- Straight Body Geometry
- Connector Interface Types: PE-047SR, PE-P047, PE-P047LL, PE-SR047AL, PE-SR047FL, .047 Semi-Rigid
- Bulkhead

Features

- Max. Operating Frequency 18 GHz
- Excellent VSWR of 1.25:1
- Gold over Nickel Plated Beryllium Copper Contact

Applications

- General Purpose Test
- Rack and Panel Mount Applications
- Custom Cable Assemblies

Description

Pasternack's PE51271 , SMA, Standard, Connector is part of our full line of RF components available for same-day shipping. Our SMA female connector operates up to a maximum frequency of 18 GHz and offers excellent VSWR of 1.25:1. This SMA bulkhead connector allows designers to create external connections on their product enclosures, and can be used in a variety of other rack mount and panel mount applications.

Our SMA female bulkhead connector PE51271 datasheet specifications and drawing with dimensions are shown below in this PDF. Pasternack's broad catalog of RF, microwave and millimeter wave connectors allows designers to configure and customize their signal connections however they like. Whether the need is to provide an I/O for a board design, or simply create a custom cable assembly configuration, Pasternack has the right connector for the job. Pasternack can also expertly build your custom cable assemblies for you and ship same-day.

Electrical Specifications

Description	Minimum	Typical	Maximum	Units
Frequency Range	DC		18	GHz
VSWR			1.25:1	
Insertion Loss			0.17	dB
Operating Voltage (AC)			250	Vrms
Dielectric Withstanding Voltage (AC)			750	Vrms
Inner Conductor DC Resistance			3	mOhms
Outer Conductor DC Resistance			2	mOhms
Insulation Resistance	5,000			MOhms
Impedance		50		Ohms

Electrical Specification Notes:
Insertion loss is = 0.04*SQRT(F(GHz)) dB

Mechanical Specifications

Size

Length	0.433071 in [11 mm]
Width	0.433071 in [11 mm]
Height	0.748031 in [19 mm]
Weight	0.015 lbs [6.8 g]

© 2023 Infinite Electronics, Inc. Pasternack is a registered trademark of Infinite Electronics, Inc.
+1 (866) 558-2786 | sales@pasternack.com | pasternack.com

SMA Female Bulkhead Mount Connector Solder Attachment for PE-047SR, PE-P047, PE-P047LL, PE-SR047AL, PE-SR047FL, .047 Semi-Rigid

PE51271

Mating Cycles	100 Cycles
Mating Torque	4 to 5.3 in-lbs [[0.45 to 0.60 Nm]]
Cable Retention Force	6.1 lbs [2.77 kg]

Material Specifications

Description	Material	Plating
Contact	Beryllium Copper	Gold over Nickel
Insulation	Teflon	
Body	Brass	Gold over Nickel
Coupling Nut	Brass	Gold over Nickel
Gasket	Silicone	
Washer	Brass	Gold over Nickel

Environmental Specifications

Temperature

Operating Range	-40 to +165 deg C
Thermal Shock	MIL-STD-202, Method 107, Condition B

Compliance Certifications (see product page for current document)

Plotted and Other Data

Notes:

SMA Female Bulkhead Mount Connector Solder Attachment for PE-047SR, PE-P047, PE-P047LL, PE-SR047AL, PE-SR047FL, .047 Semi-Rigid from Pasternack Enterprises has same day shipment for domestic and International orders. Our RF, microwave and millimeter wave products maintain a 99.4% availability and are part of the broadest selection in the industry.

Click the following link (or enter part number in "SEARCH" on website) to obtain additional part information including price, inventory and certifications: SMA Female Bulkhead Mount Connector Solder Attachment for PE-047SR, PE-P047, PE-P047LL, PE-SR047AL, PE-SR047FL, .047 Semi-Rigid PE51271

URL: https://www.pasternack.com/sma-female-pe-047sr-pe-p047-pe-sr047al-connector-pe51271-p.aspx

The information contained within this document is accurate to the best of our knowledge and representative of the part described herein. It may be necessary to make modifications to the part and/or the documentation of the part in order to impliment improvements. Pasternack Enterprises reserves the right to make such changes as required. Unless otherwise stated, all specifications are nominal. Pasternack Enterprises does not make any representation or warranty regarding the suitability of the part described herein for any particular purpose, and Pasternack Enterprises does not assume liability arising out of the use of any part or document.

© 2023 Infinite Electronics, Inc. Pasternack is a registered trademark of Infinite Electronics, Inc.

PE51271 CAD Drawing

SMA Female Bulkhead Mount Connector Solder Attachment for PE-047SR, PE-P047, PE-P047LL, PE-SR047AL, PE-SR047FL, .047 Semi-Rigid

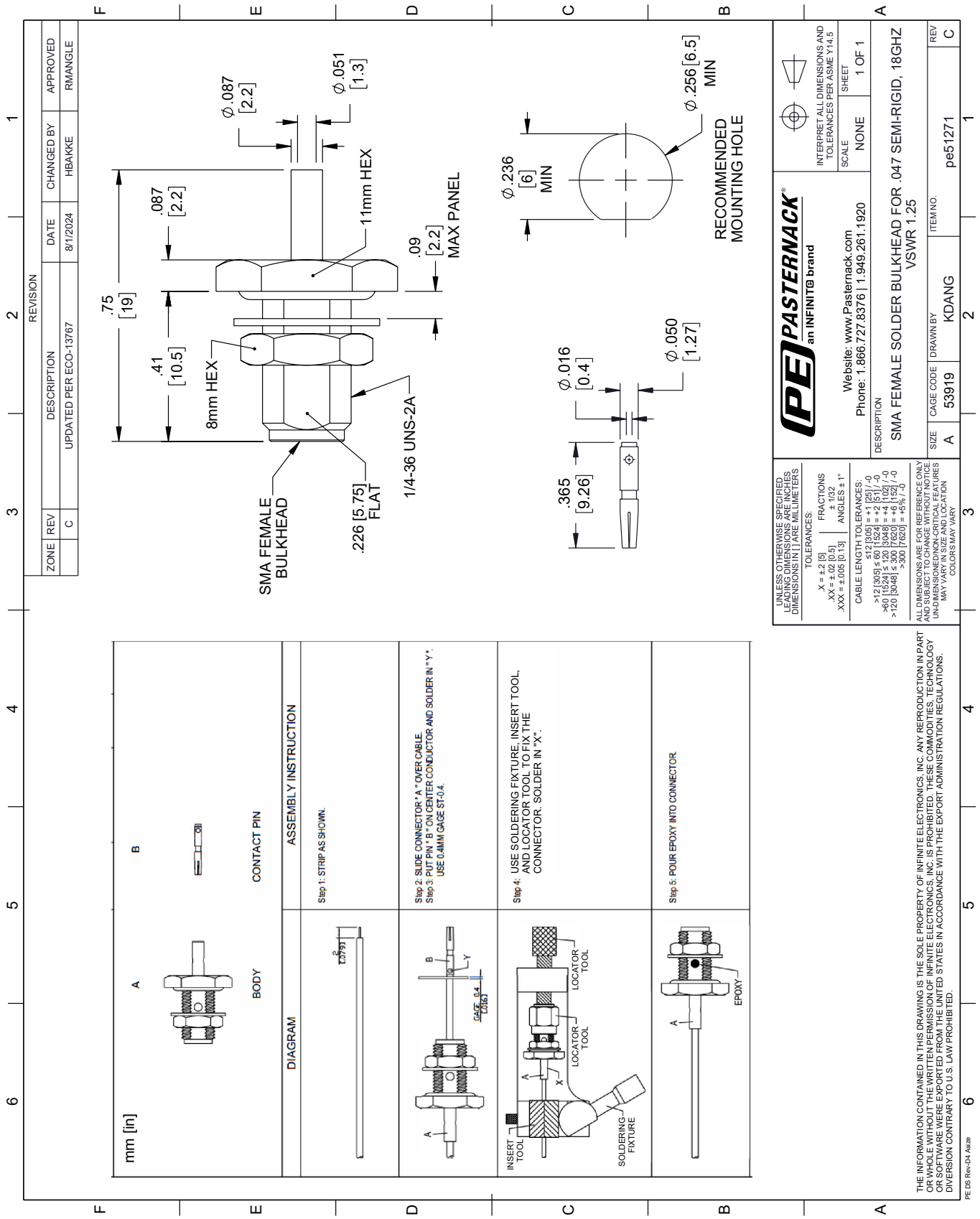

© 2023 Infinite Electronics, Inc. Pasternack is a registered trademark of Infinite Electronics, Inc.

PASTERNACK
an INFINITE brand

Flexible PE-P047 Coax Cable Double Shielded with Blue FEP Jacket

RF Cables
Technical Data Sheet

PE-P047

Configuration

- Flexible Cable
- 2 Shield(s)

Electrical Specifications

Description	Minimum	Typical	Maximum	Units
Frequency Range	DC		50	GHz
Impedance		50		Ohms
Velocity of Propagation		70		%
Shielding Effectiveness	90			dB
Nominal Capacitance		29 [95.14]		pF/ft [pF/m]

Performance by Frequency Band

Description	F1	F2	F3	F4	F5	Units
Frequency	1	2	4	8	12	GHz
Attenuation, Typ	33.54	48.41	70.42	103.5	130.43	dB/100ft
	110.04	158.83	231.04	339.57	427.92	dB/100m

Description	F6	F7	F8	F9	F10	Units
Frequency	18	26	34	40	50	GHz
Attenuation, Typ	165.27	205.9	242.57	268.31	308.79	dB/100ft
	542.22	675.52	795.83	880.28	1,013.09	dB/100m

Mechanical Specifications

Diameter	0.056 in [1.42 mm}
Weight	0.037 lbs/ft [0.06 kg/m]
Min. Bend Radius (Installation)	0.2 in [5.08 mm]
Min. Bend Radius (Repeated)	0.4 in [10.16 mm]

Click the following link (or enter part number in “SEARCH” on website) to obtain additional part information including price, inventory and certifications: Flexible PE-P047 Coax Cable Double Shielded with Blue FEP Jacket PE-P047

Pasternack Enterprises, Inc. • P.O. Box 16759, Irvine, CA 92623
Phone: (866) 727-8376 or (949) 261-1920 • **Fax:** (949) 261-7451
Sales@Pasternack.com • Techsupport@Pasternack.com

© 2020 Pasternack Enterprises All Rights Reserved

Flexible PE-P047 Coax Cable Double Shielded with Blue FEP Jacket

Construction Specifications

Description	Material and Plating	Diameter
Inner Conductor	Copper, Silver, 1 Strand	0.011 in [0.28 mm]
Conductor Type	Solid	
Dielectric	FEP	0.036 in [0.91 mm]
First Shield	Silver Plated Copper Tape	[ ]
Second Shield	Silver Plated Copper Braid 89% coverage	0.046 in [1.17 mm]
Jacket	FEP, Blue	0.056 in [1.42 mm]

Environmental Specifications

Temperature

Operating Range	-65 to +165 deg C
Storage Range	-65 to +200 deg C

Compliance Certifications (see product page for current document)

Plotted and Other Data

Notes:

Flexible PE-P047 Coax Cable Double Shielded with Blue FEP Jacket from Pasternack Enterprises has same day shipment for domestic and International orders. Our RF, microwave and millimeter wave products maintain a 99.4% availability and are part of the broadest selection in the industry.

Click the following link (or enter part number in “SEARCH” on website) to obtain additional part information including price, inventory and certifications: Flexible PE-P047 Coax Cable Double Shielded with Blue FEP Jacket PE-P047

URL: https://www.pasternack.com/precision-0.056-semirigid-replacement-50-ohm-coax-cable-fep-jacket-pe-p047-p.aspx

The information contained in this document is accurate to the best of our knowledge and representative of the part described herein. It may be necessary to make modifications to the part and/or the documentation of the part, in order to implement improvements. Pasternack reserves the right to make such changes as required. Unless otherwise stated, all specifications are nominal. Pasternack does not make any representation or warranty regarding the suitability of the part described herein for any particular purpose, and Pasternack does not assume any liability arising out of the use of any part or documentation.

Pasternack Enterprises, Inc. • P.O. Box 16759, Irvine, CA 92623
Phone: (866) 727-8376 or (949) 261-1920 • **Fax:** (949) 261-7451
Sales@Pasternack.com • Techsupport@Pasternack.com

© 2020 Pasternack Enterprises All Rights Reserved

PE-P047 CAD Drawing

Flexible PE-P047 Coax Cable Double Shielded with Blue FEP Jacket

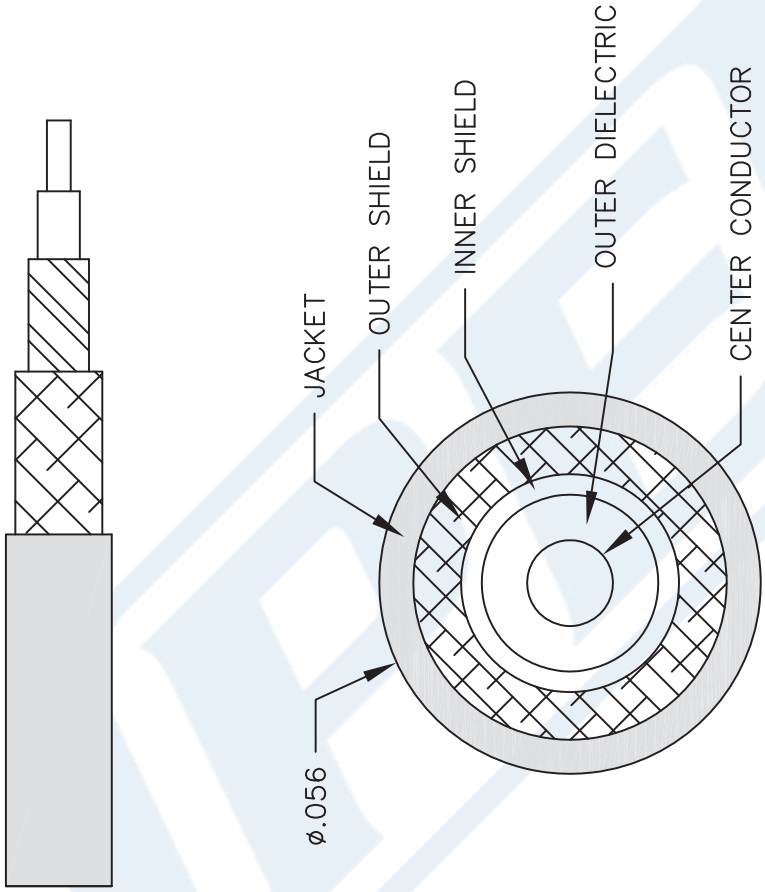

NOTES:
1. UNLESS OTHERWISE SPECIFIED ALL DIMENSIONS ARE NOMINAL.
2. ALL SPECIFICATIONS ARE SUBJECT TO CHANGE WITHOUT NOTICE AT ANY TIME.
3. DIMENSIONS ARE IN INCHES [mm].

DWG TITLE
PE-P047

FSCM NO. 53919

CAD FILE 111716 | SCALE N/A | SIZE A | 41742

PASTERNACK®
THE ENGINEER'S RF SOURCE
Pasternack Enterprises, Inc.
P.O. Box 16759 | Irvine | CA | 92623
Phone: (949) 261-1920 | **Fax:** (949) 261-7451
Website: www.pasternack.com | **E-Mail:** sales@pasternack.com

© 2020 Pasternack Enterprises All Rights Reserved