PASTERNACK
an INFINITE brand

MMCX Plug Connector Crimp/Solder Attachment for RG174, RG316, RG188, LMR-100, PE-B100, PE-C100, 0.100 inch

RF Connectors
Technical Data Sheet

PE4896

Configuration

- MMCX Plug Connector
- BS EN 122340
- 50 Ohms
- Straight Body Geometry
- Connector Interface Types: RG174, RG316, RG188, LMR-100, PE-B100, PE-C100, .100 inch

Features

- Max. Operating Frequency 6 GHz
- Excellent VSWR of 1.22:1
- Gold Plated Brass Contact
- 30 µin minimum contact plating

Applications

- General Purpose Test
- Custom Cable Assemblies

Description

Pasternack's PE4896 MMCX plug connector with crimp/solder attachment for RG174, RG316, RG188, LMR-100, PE-B100, PE-C100 and .100 inch is part of our full line of RF components available for same-day shipping. Our MMCX plug connector operates up to a maximum frequency of 6 GHz and offers excellent VSWR of 1.22:1.

Our MMCX plug connector PE4896 datasheet specifications and drawing with dimensions are shown below in this PDF. Pasternack's broad catalog of RF, microwave and millimeter wave connectors allows designers to configure and customize their signal connections however they like. Whether the need is to provide an I/O for a board design, or simply create a custom cable assembly configuration, Pasternack has the right connector for the job. Pasternack can also expertly build your custom cable assemblies for you and ship same-day.

Electrical Specifications

Description	Minimum	Typical	Maximum	Units
Frequency Range	DC		6	GHz
VSWR			1.22:1	
Operating Voltage (AC)			250	Vrms

Mechanical Specifications

Size

Length	0.575 in [14.61 mm]
Width/Dia.	0.177 in [4.50 mm]
Weight	0.007 lbs [3.18 g]

Click the following link (or enter part number in "SEARCH" on website) to obtain additional part information including price, inventory and certifications: MMCX Plug Connector Crimp/Solder Attachment for RG174, RG316, RG188, LMR-100, PE-B100, PE-C100, 0.100 inch PE4896

Pasternack Enterprises, Inc. • P.O. Box 16759, Irvine, CA 92623
Phone: (866) 727-8376 or (949) 261-1920 • **Fax:** (949) 261-7451
Sales@Pasternack.com • Techsupport@Pasternack.com

© 2020 Pasternack Enterprises All Rights Reserved

MMCX Plug Connector Crimp/Solder Attachment for RG174, RG316, RG188, LMR-100, PE-B100, PE-C100, 0.100 inch

Material Specifications

Description	Material	Plating
Contact	Brass	Gold 30 µin minimum
Insulation	PTFE	
Outer Conductor	Brass	Gold 3 µin minimum
Body	Brass	Gold 3 µin minimum
Crimp Sleeve	Brass	Gold

Environmental Specifications

Temperature

Operating Range -55 to +155 deg C

Compliance Certifications (see product page for current document)

Plotted and Other Data

Notes:

MMCX Plug Connector Crimp/Solder Attachment for RG174, RG316, RG188, LMR-100, PE-B100, PE-C100, 0.100 inch from Pasternack Enterprises has same day shipment for domestic and International orders. Our RF, microwave and millimeter wave products maintain a 99.4% availability and are part of the broadest selection in the industry.

Click the following link (or enter part number in “SEARCH” on website) to obtain additional part information including price, inventory and certifications: MMCX Plug Connector Crimp/Solder Attachment for RG174, RG316, RG188, LMR-100, PE-B100, PE-C100, 0.100 inch PE4896

URL: https://www.pasternack.com/mmcx-plug-rg174-rg316-rg188-lmr-100-pe-b100-pe-c100-0.100-connector-pe4896-p.aspx

The information contained in this document is accurate to the best of our knowledge and representative of the part described herein. It may be necessary to make modifications to the part and/or the documentation of the part, in order to implement improvements. Pasternack reserves the right to make such changes as required. Unless otherwise stated, all specifications are nominal. Pasternack does not make any representation or warranty regarding the suitability of the part described herein for any particular purpose, and Pasternack does not assume any liability arising out of the use of any part or documentation.

Pasternack Enterprises, Inc. • P.O. Box 16759, Irvine, CA 92623
Phone: (866) 727-8376 or (949) 261-1920 • **Fax:** (949) 261-7451
Sales@Pasternack.com • Techsupport@Pasternack.com

© 2020 Pasternack Enterprises All Rights Reserved

PE4896 CAD Drawing

MMCX Plug Connector Crimp/Solder Attachment for RG174, RG316, RG188, LMR-100, PE-B100, PE-C100, 0.100 inch

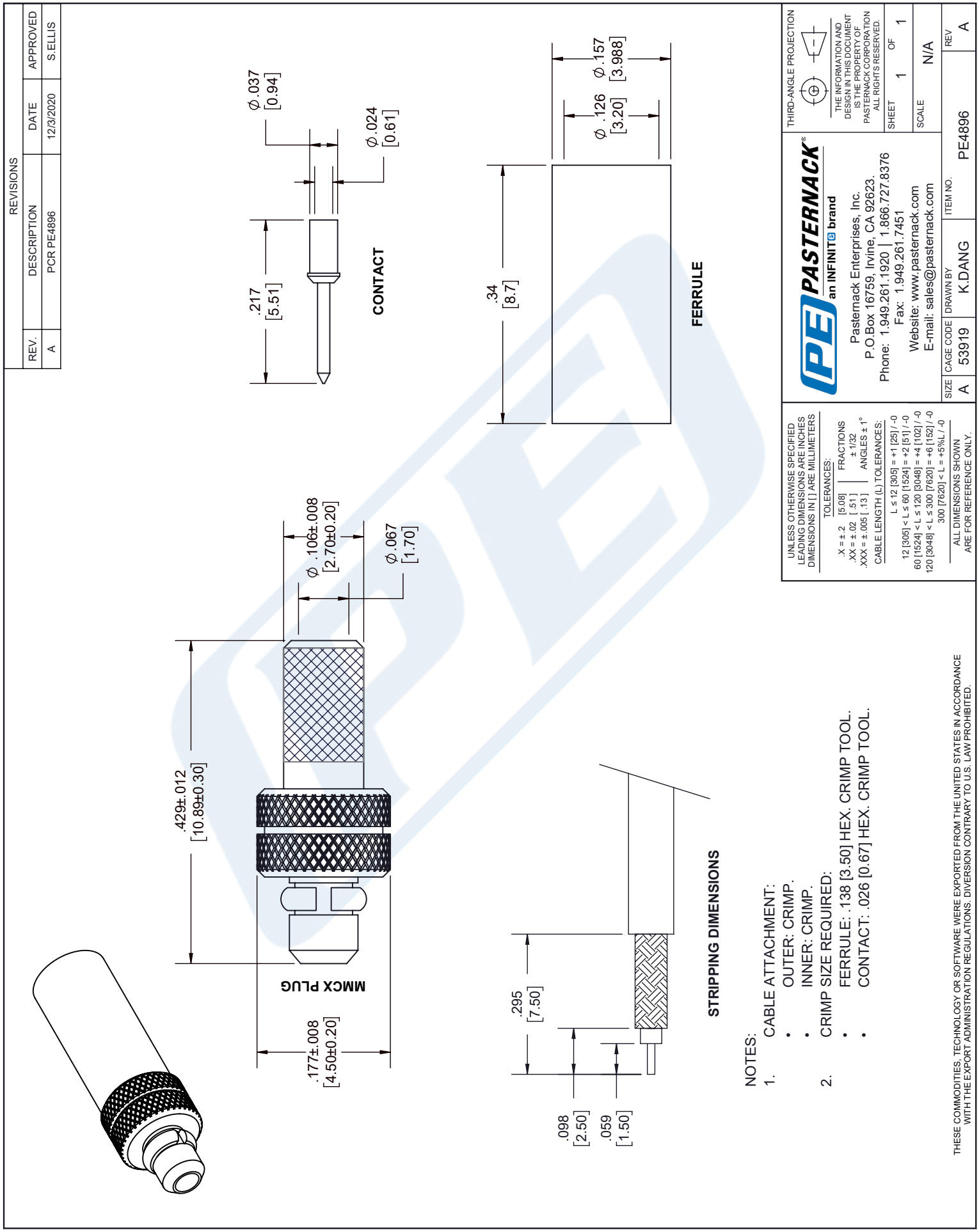

SSMC Plug Right Angle Connector Crimp/Solder Attachment for RG316, RG188, RG174, PE-C100-LSZH, PE-B100, LMR-100A-FR, LMR-100A

RF Connectors
Technical Data Sheet

PE45497

Configuration

- SSMC Plug Connector
- 50 Ohms
- Right Angle Body Geometry
- Connector Interface Types: RG316, RG188, RG174, PE-C100-LSZH, PE-B100, LMR-100A-FR, LMR-100A

Features

- Max. Operating Frequency 12.4 GHz
- Good VSWR of 1.62:1
- Gold Plated Beryllium Copper Contact
- Contact plating according to MIL-G-45204
- Reliable threaded coupling
- Small SSMC connector form factor (50% smaller than SMA, radially)
- IEC 60169-20 SSMC connector interface
- In stock and ready to ship

Applications

- General Purpose Test
- Custom Cable Assemblies
- Avionics
- A/D Modules
- Data Acquisition
- Software defined radio (SDR)
- RADAR/SONAR
- Ultra Wideband Digital Receivers
- Medical equipment

Description

Pasternack's PE45497 SSMC plug right angle connector with crimp/solder attachment for RG316, RG188, RG174, PE-C100-LSZH, PE-B100, LMR-100A-FR and LMR-100A is part of our full line of RF components available for same-day shipping. Our SSMC plug connector operates up to a maximum frequency of 12.4 GHz and offers good VSWR of 1.62:1. Its right angle body geometry allows for easier connections in tight spaces.

Our SSMC plug right angle connector PE45497 datasheet specifications and drawing with dimensions are shown below in this PDF. Pasternack's broad catalog of RF, microwave and millimeter wave connectors allows designers to configure and customize their signal connections however they like. Whether the need is to provide an I/O for a board design, or simply create a custom cable assembly configuration, Pasternack has the right connector for the job. Pasternack can also expertly build your custom cable assemblies for you and ship same-day.

Electrical Specifications

Description	Minimum	Typical	Maximum	Units
Frequency Range	DC		12.4	GHz
VSWR			1.62:1	
Insertion Loss			0.3	dB
Operating Voltage (AC)			250	Vrms
High Potential Voltage 5 MHz			400	Vrms
Inner Conductor DC Resistance			4	mOhms
Outer Conductor DC Resistance			1	mOhms
Insulation Resistance	1,000			MOhms
RF Leakage	-50			dB

Click the following link (or enter part number in "SEARCH" on website) to obtain additional part information including price, inventory and certifications: SSMC Plug Right Angle Connector Crimp/Solder Attachment for RG316, RG188, RG174, PE-C100-LSZH, PE-B100, LMR-100A-FR, LMR-100A PE45497

Pasternack Enterprises, Inc. • P.O. Box 16759, Irvine, CA 92623
Phone: (866) 727-8376 or (949) 261-1920 • **Fax:** (949) 261-7451
Sales@Pasternack.com • Techsupport@Pasternack.com

© 2020 Pasternack Enterprises All Rights Reserved

SSMC Plug Right Angle Connector Crimp/Solder Attachment for RG316, RG188, RG174, PE-C100-LSZH, PE-B100, LMR-100A-FR, LMR-100A

Mechanical Specifications

Size

Length	0.421 in [10.69 mm]
Width/Dia.	0.156 in [3.96 mm]
Height	0.33 in [8.38 mm]
Weight	0.007 lbs [3.18 g]
Mating Cycles	500 Cycles
Mating Torque	1.75 to 2 in-lbs [0.20 to 0.23 Nm]

Material Specifications

Description	Material	Plating
Contact	Beryllium Copper	Gold MIL-G-45204
Insulation	Teflon	
Body	Brass	Gold MIL-G-45204
Coupling Nut	Beryllium Copper	Gold MIL-G-45204
Crimp Sleeve	Brass	Gold MIL-G-45204

Environmental Specifications

Temperature

Operating Range	-65 to +165 deg C
Shock	Method 213, Condition B, 75G @6ms @1/2 sine
Vibration	Method 204, Condition D (20G)
Salt Spray	Method 101, Condition B, 5% salt solution

Compliance Certifications (see product page for current document)

Plotted and Other Data

Notes:

Click the following link (or enter part number in “SEARCH” on website) to obtain additional part information including price, inventory and certifications: SSMC Plug Right Angle Connector Crimp/Solder Attachment for RG316, RG188, RG174, PE-C100-LSZH, PE-B100, LMR-100A-FR, LMR-100A PE45497

Pasternack Enterprises, Inc. • P.O. Box 16759, Irvine, CA 92623
Phone: (866) 727-8376 or (949) 261-1920 • **Fax:** (949) 261-7451
Sales@Pasternack.com • Techsupport@Pasternack.com

© 2020 Pasternack Enterprises All Rights Reserved

SSMC Plug Right Angle Connector Crimp/Solder Attachment for RG316, RG188, RG174, PE-C100-LSZH, PE-B100, LMR-100A-FR, LMR-100A

Assembly Instruction

Assembly Instructions

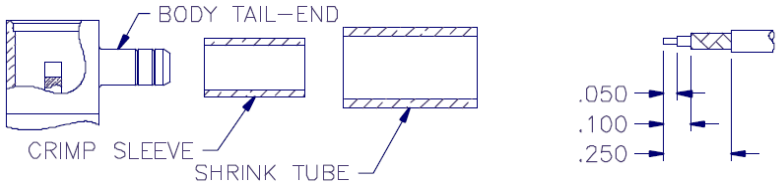

1. TRIM CABLE AS SHOWN ABOVE. TIN END OF CENTER CONDUCTOR.
2. SLIDE CRIMP SLEEVE AND SHRINK TUBE **(IF SUPPLIED)** OVER CABLE JACKET.
3. FLARE CABLE BRAID OUT SLIGHTLY BY ROTATING DIELECTRIC.

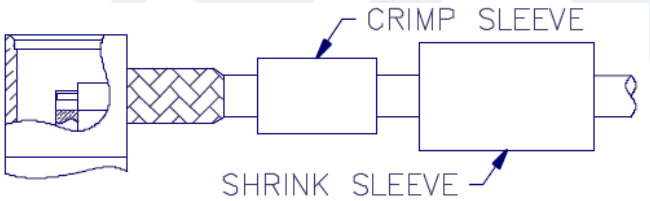

4. INSERT CABLE ASSEMBLY INTO BODY TAIL-END MAKING SURE TAIL GOES OVER DIELECTRIC AND UNDER BRAID. SLIDE IN UNTIL BRAID TOUCHES REAR SURFACE OF BODY.
5. SLIDE CRIMP SLEEVE FORWARD AND USE .128 HEX DIE TO CRIMP SLEEVE TO BRAID.

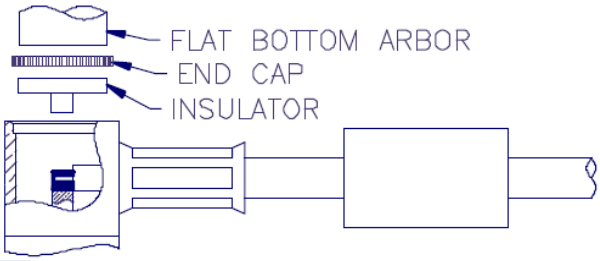

6. SOLDER CENTER CONDUCTOR OF CABLE TO CONTACT.
7. PLACE INSULATOR AND END CAP INTO CONNECTOR BODY AS SHOWN AND USE A .185" DIAMETER FLAT BOTTOM PUNCH TO PRESS CAP IN PLACE. CAP MUST BE BELOW SURFACE TO SEAT PROPERLY.
8. SLIDE SHRINK TUBE (IF SUPPLIED) OVER CRIMP SLEEVE AND SHRINK TO FIT.

Click the following link (or enter part number in "SEARCH" on website) to obtain additional part information including price, inventory and certifications: SSMC Plug Right Angle Connector Crimp/Solder Attachment for RG316, RG188, RG174, PE-C100-LSZH, PE-B100, LMR-100A-FR, LMR-100A PE45497

Pasternack Enterprises, Inc. • P.O. Box 16759, Irvine, CA 92623
Phone: (866) 727-8376 or (949) 261-1920 • **Fax:** (949) 261-7451
Sales@Pasternack.com • Techsupport@Pasternack.com

© 2020 Pasternack Enterprises All Rights Reserved

SSMC Plug Right Angle Connector Crimp/Solder Attachment for RG316, RG188, RG174, PE-C100-LSZH, PE-B100, LMR-100A-FR, LMR-100A

RF Connectors
Technical Data Sheet

PE45497

SSMC Plug Right Angle Connector Crimp/Solder Attachment for RG316, RG188, RG174, PE-C100-LSZH, PE-B100, LMR-100A-FR, LMR-100A from Pasternack Enterprises has same day shipment for domestic and International orders. Our RF, microwave and millimeter wave products maintain a 99.4% availability and are part of the broadest selection in the industry.

Click the following link (or enter part number in “SEARCH” on website) to obtain additional part information including price, inventory and certifications: SSMC Plug Right Angle Connector Crimp/Solder Attachment for RG316, RG188, RG174, PE-C100-LSZH, PE-B100, LMR-100A-FR, LMR-100A PE45497

URL: https://www.pasternack.com/ssmc-plug-rg316-rg188-pe-c100-lszh-pe-b100-fr-connector-pe45497-p.aspx

The information contained in this document is accurate to the best of our knowledge and representative of the part described herein. It may be necessary to make modifications to the part and/or the documentation of the part, in order to implement improvements. Pasternack reserves the right to make such changes as required. Unless otherwise stated, all specifications are nominal. Pasternack does not make any representation or warranty regarding the suitability of the part described herein for any particular purpose, and Pasternack does not assume any liability arising out of the use of any part or documentation.

Pasternack Enterprises, Inc. • P.O. Box 16759, Irvine, CA 92623
Phone: (866) 727-8376 or (949) 261-1920 • **Fax:** (949) 261-7451
Sales@Pasternack.com • Techsupport@Pasternack.com

© 2020 Pasternack Enterprises All Rights Reserved

PE45497 CAD Drawing

SSMC Plug Right Angle Connector Crimp/Solder Attachment for RG316, RG188, RG174, PE-C100-LSZH, PE-B100, LMR-100A-FR, LMR-100A

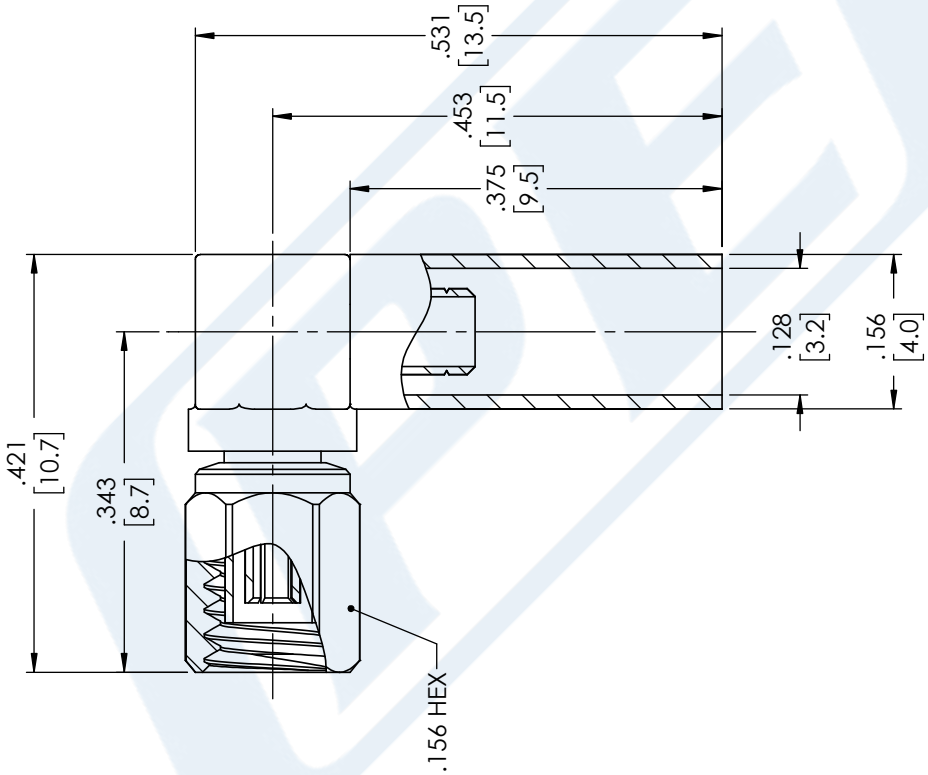

STANDARD TOLERANCES	
.X	±0.2
.XX	±0.01
.XXX	±0.005

*STANDARD TOLERANCES APPLY ONLY TO DIMENSIONS IN INCHES

NOTES:
1. UNLESS OTHERWISE SPECIFIED ALL DIMENSIONS ARE NOMINAL.
2. ALL SPECIFICATIONS ARE SUBJECT TO CHANGE WITHOUT NOTICE AT ANY TIME.
3. DIMENSIONS ARE IN INCHES [mm].

DWG TITLE PE45497

CAD FILE 08/13/18 | SCALE N/A | SIZE A | CN2245

CAGE CODE 53919

PASTERNACK® THE ENGINEER'S RF SOURCE
Pasternack Enterprises, Inc.
P.O. Box 16759 | Irvine | CA | 92623
Phone: (949) 261-1920 | **Fax:** (949) 261-7451
Website: www.pasternack.com | **E-Mail:** sales@pasternack.com

© 2020 Pasternack Enterprises All Rights Reserved

Flexible RG316 Coax Cable Single Shielded with Tan FEP Jacket

RF Cables
Technical Data Sheet

RG316/U

Configuration

- Flexible Cable
- 1 Shield(s)

Features

- High Flexibility
- FEP Jacket
- Velocity of Propagation 69%

Applications

- General Purpose
- Antenna Feeds
- Communication Systems
- Wireless Systems
- Indoor / Outdoor Uses
- High Temperature Applications
- High Flexibility Applications
- Jumper Cable Assemblies

Description

Flexible coaxial cable are ideal for applications where tight bends and continual flexure are required. Pasternack's RG316/U is a single shielded flexible coax cable with FEP jacket and compatible with a wide selection of connector types. This RG316/U coaxial cable has a stranded inner conductor for better flexibility and operates up to 3 GHz. The FEP jacket of this RG316/U coax cable makes it suitable for indoor/outdoor uses and high temperature applications. RG316/U datasheet specifications and outline drawing for this flexible cable are shown in the PDF below.

Pasternack carries a wide range of cables ready to ship same day to fit your needs. They are available in corrugated, flexible, formable or semi-rigid versions with different constructions of conductor materials, dielectric materials, shielding configurations and jacket materials. Our cables are designed to fit a wide range of performance criteria including attenuation, operating temperature, environmental factor, and power capability.

Electrical Specifications

Description	Minimum	Typical	Maximum	Units
Frequency Range	DC		3	GHz
Impedance		50		Ohms
Velocity of Propagation		69		%
Operating Voltage (AC)			900	Vrms
Dielectric Withstanding Voltage (AC)			2,000	Vrms
Jacket Spark			2,000	Vrms
Nominal Capacitance			32 [104.99]	[pF/m]

Click the following link (or enter part number in "SEARCH" on website) to obtain additional part information including price, inventory and certifications: Flexible RG316 Coax Cable Single Shielded with Tan FEP Jacket RG316/U

Pasternack Enterprises, Inc. • P.O. Box 16759, Irvine, CA 92623
Phone: (866) 727-8376 or (949) 261-1920 • **Fax:** (949) 261-7451
Sales@Pasternack.com • Techsupport@Pasternack.com

© 2019 Pasternack Enterprises All Rights Reserved

Flexible RG316 Coax Cable Single Shielded with Tan FEP Jacket

Performance by Frequency Band

Description	F1	F2	F3	F4	F5	Units
Frequency	0.05	0.1	0.4	1	3	GHz
Attenuation, Typ	7.5	11	21	38	58	dB/100ft
	24.61	36.09	68.9	124.67	190.29	dB/100m

Mechanical Specifications

Diameter	0.102 in [2.59 mm]
Weight	0.01 lbs/ft [0.01 Kg/m]

Construction Specifications

Description	Material and Plating	Diameter
Inner Conductor	Copper Clad Steel, Silver7	0.02 in 0.51 mm
Conductor Type	Stranded	
Dielectric	PTFE	0.06 in 1.52 mm
First Shield	Silver Plated Copper Braid 95% coverage	0.081 in 2.06 mm
Jacket	FEP, Tan	0.102 in [2.59 mm]

Environmental Specifications

Temperature

Operating Range	-55 to +200 deg C

Click the following link (or enter part number in “SEARCH” on website) to obtain additional part information including price, inventory and certifications: Flexible RG316 Coax Cable Single Shielded with Tan FEP Jacket RG316/U

Pasternack Enterprises, Inc. • P.O. Box 16759, Irvine, CA 92623
Phone: (866) 727-8376 or (949) 261-1920 • **Fax:** (949) 261-7451
Sales@Pasternack.com • Techsupport@Pasternack.com

© 2019 Pasternack Enterprises All Rights Reserved

Flexible RG316 Coax Cable Single Shielded with Tan FEP Jacket

Compliance Certifications (see product page for current document)

Plotted and Other Data

Notes:

Flexible RG316 Coax Cable Single Shielded with Tan FEP Jacket from Pasternack Enterprises has same day shipment for domestic and International orders. Our RF, microwave and millimeter wave products maintain a 99.4% availability and are part of the broadest selection in the industry.

Click the following link (or enter part number in “SEARCH” on website) to obtain additional part information including price, inventory and certifications: Flexible RG316 Coax Cable Single Shielded with Tan FEP Jacket RG316/U

URL: https://www.pasternack.com/flexible-rg316u-fep-jacket-silver-plated-copper-braid-outer-conductor-single-shielded-rg316-u-p.aspx

The information contained in this document is accurate to the best of our knowledge and representative of the part described herein. It may be necessary to make modifications to the part and/or the documentation of the part, in order to implement improvements. Pasternack reserves the right to make such changes as required. Unless otherwise stated, all specifications are nominal. Pasternack does not make any representation or warranty regarding the suitability of the part described herein for any particular purpose, and Pasternack does not assume any liability arising out of the use of any part or documentation.

Pasternack Enterprises, Inc. • P.O. Box 16759, Irvine, CA 92623
Phone: (866) 727-8376 or (949) 261-1920 • **Fax:** (949) 261-7451
Sales@Pasternack.com • Techsupport@Pasternack.com

© 2019 Pasternack Enterprises All Rights Reserved

RG316/U CAD Drawing

Flexible RG316 Coax Cable Single Shielded with Tan FEP Jacket

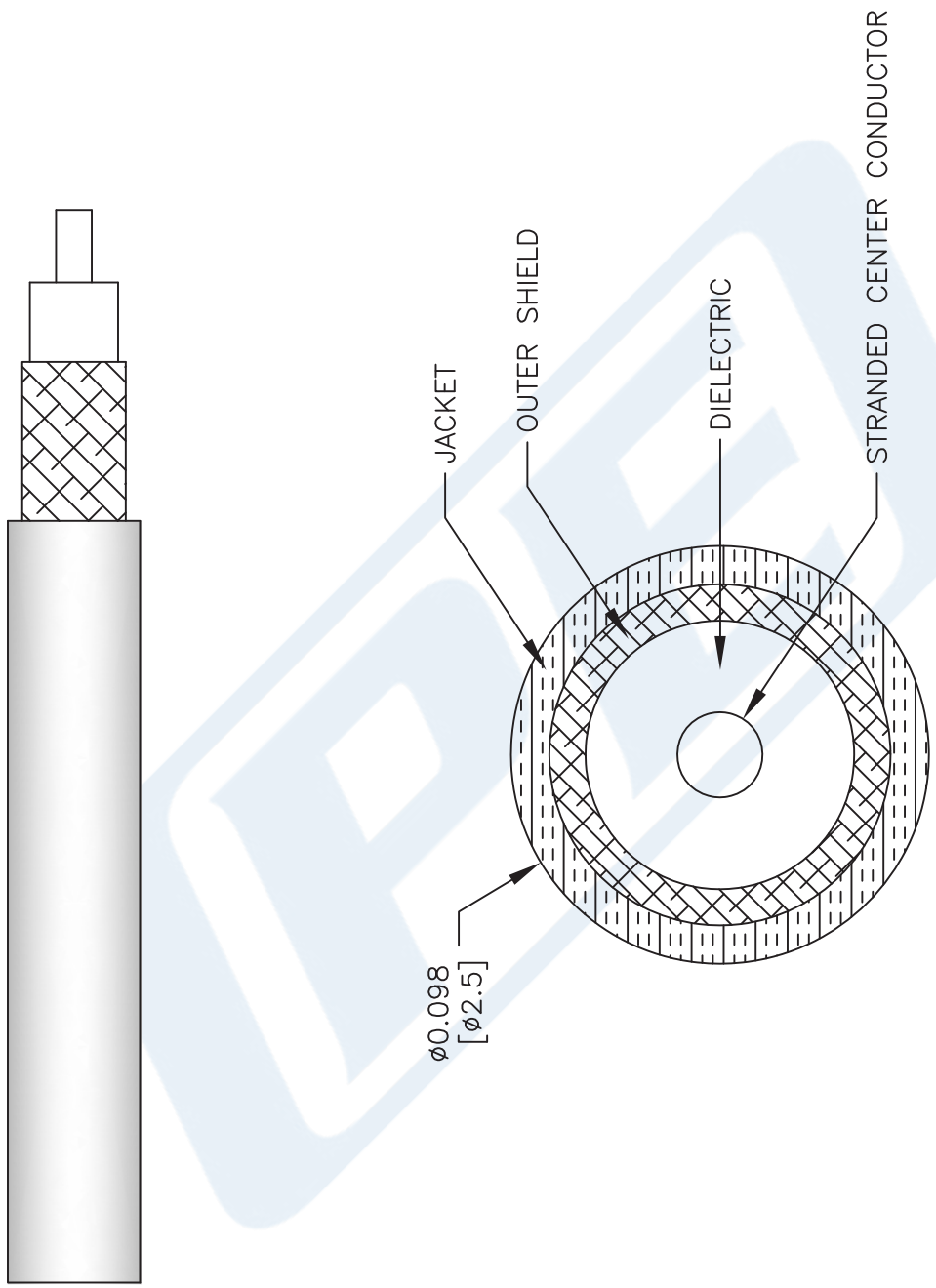

NOTES:
1. UNLESS OTHERWISE SPECIFIED ALL DIMENSIONS ARE NOMINAL.
2. ALL SPECIFICATIONS ARE SUBJECT TO CHANGE WITHOUT NOTICE AT ANY TIME.
3. DIMENSIONS ARE IN INCHES [mm].

DWG TITLE
RG316/U

FSCM NO. 53919

CAD FILE 111716 | SCALE N/A | SIZE A | 41742

PASTERNACK®
THE ENGINEER'S RF SOURCE
Pasternack Enterprises, Inc.
P.O. Box 16759 | Irvine | CA | 92623
Phone: (949) 261-1920 | **Fax:** (949) 261-7451
Website: www.pasternack.com | **E-Mail:** sales@pasternack.com

© 2019 Pasternack Enterprises All Rights Reserved