PASTERNACK®
THE ENGINEER'S RF SOURCE

FAKRA Jack Connector Crimp/Solder Attachment for RG174, RG316, RG188, .100 inch, PE-B100, PE-C100, LMR-100, White Color

RF Connectors Technical Data Sheet PE44646B

Configuration

- FAKRA Jack Connector
- 50 Ohms
- Straight Body Geometry
- RG174, RG316, RG188, .100 inch, PE-B100, PE-C100, LMR-100 Interface Type
- Crimp/Solder Attachment

Features

- Max. Operating Frequency 4 GHz
- Good VSWR of 1.3:1
- Gold Plated Phosphor Bronze Contact

Applications

- General Purpose Test
- Custom Cable Assemblies

Description

Pasternack's PE44646B FAKRA jack connector with crimp/solder attachment for RG174, RG316, RG188, .100 inch, PE-B100, PE-C100 and LMR-100 is part of our full line of RF components available for same-day shipping. Our FAKRA jack connector operates up to a maximum frequency of 4 GHz and offers good VSWR of 1.3:1.

Our FAKRA jack connector PE44646B datasheet specifications and drawing with dimensions are shown below in this PDF. Pasternack's broad catalog of RF, microwave and millimeter wave connectors allows designers to configure and customize their signal connections however they like. Whether the need is to provide an I/O for a board design, or simply create a custom cable assembly configuration, Pasternack has the right connector for the job. Pasternack can also expertly build your custom cable assemblies for you and ship same-day.

Electrical Specifications

Description	Minimum	Typical	Maximum	Units
Frequency Range	DC		4	GHz
VSWR			1.3:1	
Operating Voltage (AC)			335	Vrms
Dielectric Withstanding Voltage (AC)			1,000	Vrms
Inner Conductor DC Resistance			6	mOhms
Outer Conductor DC Resistance			2.5	mOhms
Insulation Resistance	1,000			MOhms

Mechanical Specifications

Size	
Length	0.975 in [24.77 mm]
Width/Dia.	0.37 in [9.40 mm]
Height	0.535 in [13.59 mm]
Weight	0.006 lbs [2.72 g]

Click the following link (or enter part number in "SEARCH" on website) to obtain additional part information including price, inventory and certifications: FAKRA Jack Connector Crimp/Solder Attachment for RG174, RG316, RG188, .100 inch, PE-B100, PE-C100, LMR-100, White Color PE44646B

Pasternack Enterprises, Inc. • P.O. Box 16759, Irvine, CA 92623
Phone: (866) 727-8376 or (949) 261-1920 • **Fax:** (949) 261-7451
Sales@Pasternack.com • Techsupport@Pasternack.com

© 2017 Pasternack Enterprises All Rights Reserved

FAKRA Jack Connector Crimp/Solder Attachment for RG174, RG316, RG188, .100 inch, PE-B100, PE-C100, LMR-100, White Color

Material Specifications

Description	Material	Plating
Contact	Phosphor Bronze	Gold
Insulation	PTFE	
Outer Conductor	Brass	Nickel
Body	Plastic	

Environmental Specifications

Temperature

Operating Range -40 to +85 deg C

Compliance Certifications (see product page for current document)

Plotted and Other Data

Notes:

FAKRA Jack Connector Crimp/Solder Attachment for RG174, RG316, RG188, .100 inch, PE-B100, PE-C100, LMR-100, White Color from Pasternack Enterprises has same day shipment for domestic and International orders. Our RF, microwave and millimeter wave products maintain a 99.4% availability and are part of the broadest selection in the industry.

Click the following link (or enter part number in "SEARCH" on website) to obtain additional part information including price, inventory and certifications: FAKRA Jack Connector Crimp/Solder Attachment for RG174, RG316, RG188, .100 inch, PE-B100, PE-C100, LMR-100, White Color PE44646B

URL: https://www.pasternack.com/fakra-jack-standard-pe-c100-rg174-rg316-connector-pe44646b-p.aspx

The information contained in this document is accurate to the best of our knowledge and representative of the part described herein. It may be necessary to make modifications to the part and/or the documentation of the part, in order to implement improvements. Pasternack reserves the right to make such changes as required. Unless otherwise stated, all specifications are nominal. Pasternack does not make any representation or warranty regarding the suitability of the part described herein for any particular purpose, and Pasternack does not assume any liability arising out of the use of any part or documentation.

Pasternack Enterprises, Inc. • P.O. Box 16759, Irvine, CA 92623
Phone: (866) 727-8376 or (949) 261-1920 • **Fax:** (949) 261-7451
Sales@Pasternack.com • Techsupport@Pasternack.com

© 2017 Pasternack Enterprises All Rights Reserved

PE44646B CAD Drawing

FAKRA Jack Connector Crimp/Solder Attachment for RG174, RG316, RG188, .100 inch, PE-B100, PE-C100, LMR-100, White Color

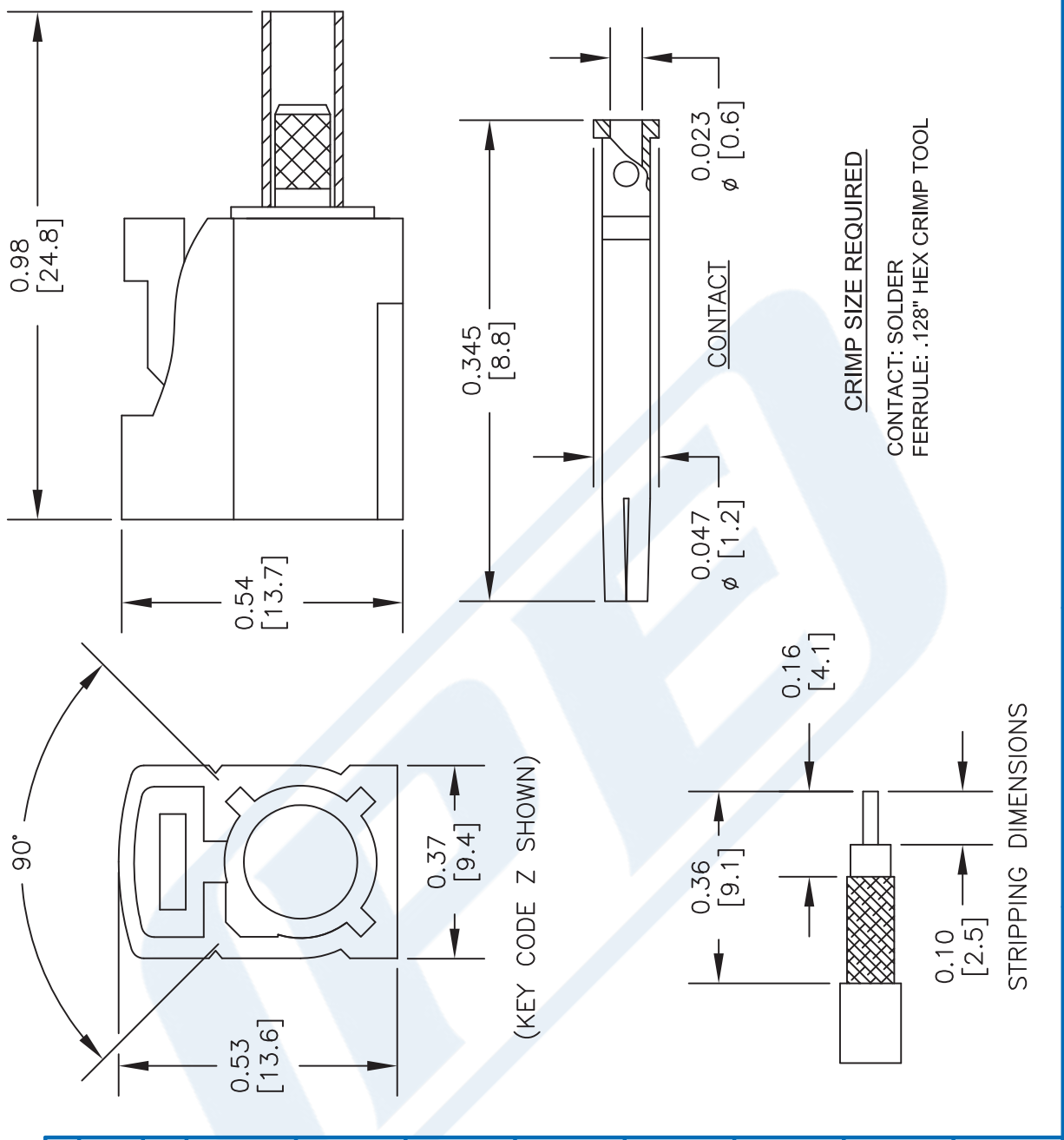

NOTES:
1. UNLESS OTHERWISE SPECIFIED ALL DIMENSIONS ARE NOMINAL.
2. ALL SPECIFICATIONS ARE SUBJECT TO CHANGE WITHOUT NOTICE AT ANY TIME.
3. DIMENSIONS ARE IN INCHES [mm].

DWG TITLE **PE44646/Y**

CAGE CODE 53919

CAD FILE 041017 | SCALE N/A | SIZE A | 2233

Part Configurator

1. Replace Y with code.

CODING	JACK	COLOR	APPLICATION
A		BLACK	RADIO WITH PHANTOM SUPPLY
B		WHITE	RADIO WITHOUT PHANTOM SUPPLY
C		BLUE	GPS: TELEMATICS OR NAVIGATION
D		BORDEAUX	GSM: CELLULAR PHONE
H		VIOLET	GPS: TELEMATICS AND NAVIGATION
I		BEIGE	BLUETOOTH
K		CURRY	RADIO WITH IF OUTPUT (ANTENNA DIVERSITY)
Z		WATER BLUE	NEUTRAL CODING

PASTERNACK® THE ENGINEER'S RF SOURCE
Pasternack Enterprises, Inc.
P.O. Box 16759 | Irvine | CA | 92623
Phone: (949) 261-1920 | **Fax:** (949) 261-7451
Website: www.pasternack.com | **E-Mail:** sales@pasternack.com

© 2017 Pasternack Enterprises All Rights Reserved

PASTERNACK
an INFINITE brand

SSMC Plug Connector Crimp/Solder Attachment for RG316, RG174, RG188

RF Connectors
Technical Data Sheet

PE45209

Configuration

- SSMC Plug Connector
- 50 Ohms
- Straight Body Geometry
- Connector Interface Types: RG316, RG174, RG188
- 5/32 inch Hex

Features

- Max. Operating Frequency 12.4 GHz
- Good VSWR of 1.5:1
- Gold Plated Beryllium Copper Contact

Applications

- General Purpose Test
- Custom Cable Assemblies

Description

Pasternack's PE45209 SSMC plug connector with crimp/solder attachment for RG316, RG174 and RG188 is part of our full line of RF components available for same-day shipping. Our SSMC plug connector operates up to a maximum frequency of 12.4 GHz and offers good VSWR of 1.5:1.

Our SSMC plug connector PE45209 datasheet specifications and drawing with dimensions are shown below in this PDF. Pasternack's broad catalog of RF, microwave and millimeter wave connectors allows designers to configure and customize their signal connections however they like. Whether the need is to provide an I/O for a board design, or simply create a custom cable assembly configuration, Pasternack has the right connector for the job. Pasternack can also expertly build your custom cable assemblies for you and ship same-day.

Electrical Specifications

Description	Minimum	Typical	Maximum	Units
Frequency Range	DC		12.4	GHz
VSWR			1.5:1	
Insulation Resistance	1,000			MOhms

Mechanical Specifications

Size	
Length	0.94 in [23.88 mm]
Width/Dia.	0.156 in [3.96 mm]
Weight	0.0033 lbs [1.5 g]
Mating Cycles	500 Cycles
Mating Torque	1 in-lbs [0.11 Nm]

Click the following link (or enter part number in "SEARCH" on website) to obtain additional part information including price, inventory and certifications: SSMC Plug Connector Crimp/Solder Attachment for RG316, RG174, RG188 PE45209

Pasternack Enterprises, Inc. • P.O. Box 16759, Irvine, CA 92623
Phone: (866) 727-8376 or (949) 261-1920 • **Fax:** (949) 261-7451
Sales@Pasternack.com • Techsupport@Pasternack.com

© 2019 Pasternack Enterprises All Rights Reserved

SSMC Plug Connector Crimp/Solder Attachment for RG316, RG174, RG188

Material Specifications

Description	Material	Plating
Contact	Beryllium Copper	Gold
Insulation	PTFE	
Body	Beryllium Copper	Gold
Coupling Nut	Beryllium Copper	Gold

Environmental Specifications

Temperature

Operating Range -45 to +120 deg C

Compliance Certifications (see product page for current document)

Plotted and Other Data

Notes:

SSMC Plug Connector Crimp/Solder Attachment for RG316, RG174, RG188 from Pasternack Enterprises has same day shipment for domestic and International orders. Our RF, microwave and millimeter wave products maintain a 99.4% availability and are part of the broadest selection in the industry.

Click the following link (or enter part number in “SEARCH” on website) to obtain additional part information including price, inventory and certifications: SSMC Plug Connector Crimp/Solder Attachment for RG316, RG174, RG188 PE45209

URL: https://www.pasternack.com/ssmc-male-rg316-rg174-rg188-connector-pe45209-p.aspx

The information contained in this document is accurate to the best of our knowledge and representative of the part described herein. It may be necessary to make modifications to the part and/or the documentation of the part, in order to implement improvements. Pasternack reserves the right to make such changes as required. Unless otherwise stated, all specifications are nominal. Pasternack does not make any representation or warranty regarding the suitability of the part described herein for any particular purpose, and Pasternack does not assume any liability arising out of the use of any part or documentation.

Pasternack Enterprises, Inc. • P.O. Box 16759, Irvine, CA 92623
Phone: (866) 727-8376 or (949) 261-1920 • **Fax:** (949) 261-7451
Sales@Pasternack.com • Techsupport@Pasternack.com

© 2019 Pasternack Enterprises All Rights Reserved

PE45209 CAD Drawing

SSMC Plug Connector Crimp/Solder Attachment for RG316, RG174, RG188

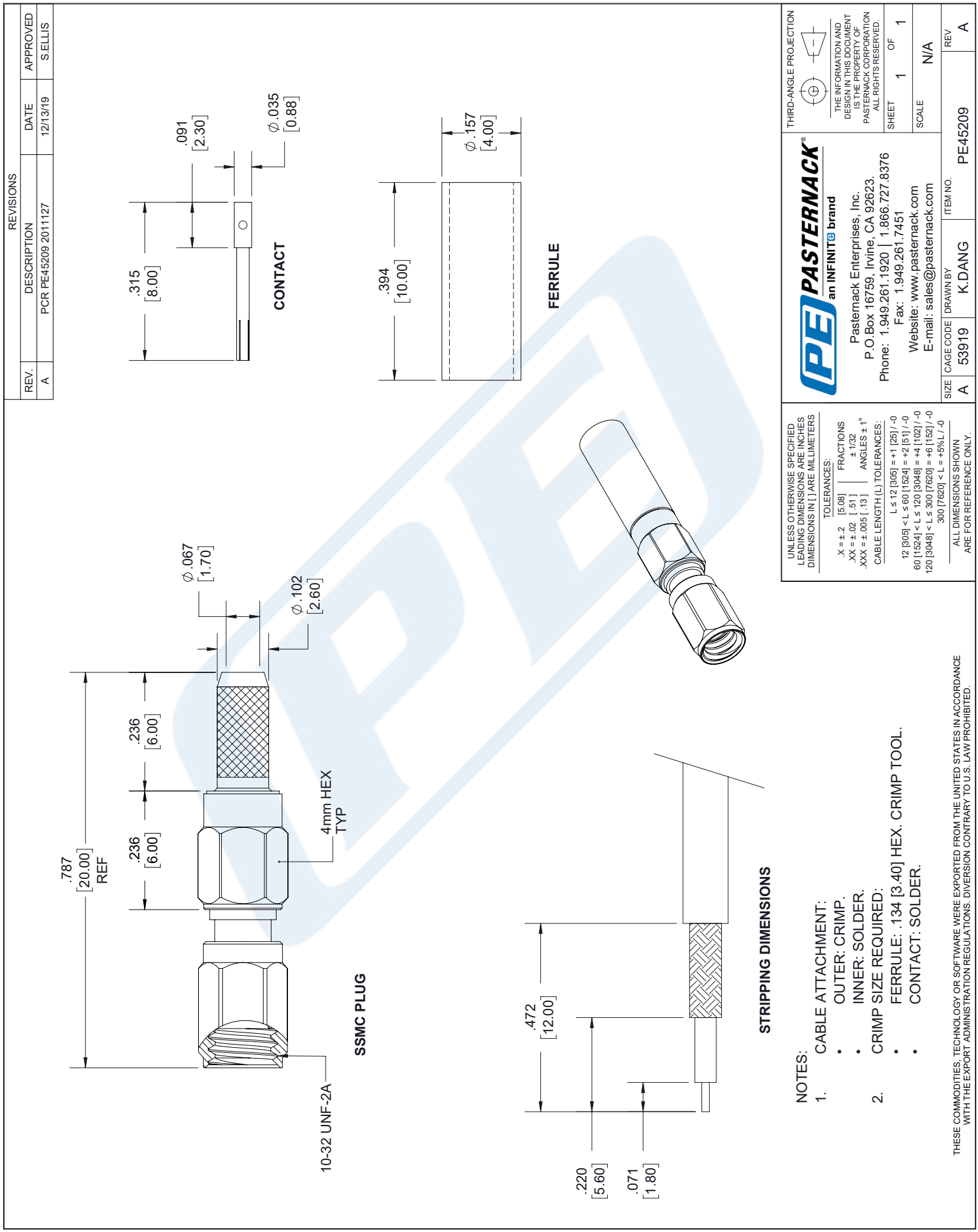

Flexible RG316 Coax Cable Single Shielded with Tan FEP Jacket

RF Cables
Technical Data Sheet

RG316/U

Configuration

- Flexible Cable
- 1 Shield(s)

Features

- High Flexibility
- FEP Jacket
- Velocity of Propagation 69%

Applications

- General Purpose
- Antenna Feeds
- Communication Systems
- Wireless Systems
- Indoor / Outdoor Uses
- High Temperature Applications
- High Flexibility Applications
- Jumper Cable Assemblies

Description

Flexible coaxial cable are ideal for applications where tight bends and continual flexure are required. Pasternack's RG316/U is a single shielded flexible coax cable with FEP jacket and compatible with a wide selection of connector types. This RG316/U coaxial cable has a stranded inner conductor for better flexibility and operates up to 3 GHz. The FEP jacket of this RG316/U coax cable makes it suitable for indoor/outdoor uses and high temperature applications. RG316/U datasheet specifications and outline drawing for this flexible cable are shown in the PDF below.

Pasternack carries a wide range of cables ready to ship same day to fit your needs. They are available in corrugated, flexible, formable or semi-rigid versions with different constructions of conductor materials, dielectric materials, shielding configurations and jacket materials. Our cables are designed to fit a wide range of performance criteria including attenuation, operating temperature, environmental factor, and power capability.

Electrical Specifications

Description	Minimum	Typical	Maximum	Units
Frequency Range	DC		3	GHz
Impedance		50		Ohms
Velocity of Propagation		69		%
Operating Voltage (AC)			900	Vrms
Dielectric Withstanding Voltage (AC)			2,000	Vrms
Jacket Spark			2,000	Vrms
Nominal Capacitance			32 [104.99]	[pF/m]

Click the following link (or enter part number in "SEARCH" on website) to obtain additional part information including price, inventory and certifications: Flexible RG316 Coax Cable Single Shielded with Tan FEP Jacket RG316/U

Pasternack Enterprises, Inc. • P.O. Box 16759, Irvine, CA 92623
Phone: (866) 727-8376 or (949) 261-1920 • **Fax:** (949) 261-7451
Sales@Pasternack.com • Techsupport@Pasternack.com

© 2019 Pasternack Enterprises All Rights Reserved

Flexible RG316 Coax Cable Single Shielded with Tan FEP Jacket

Performance by Frequency Band

Description	F1	F2	F3	F4	F5	Units
Frequency	0.05	0.1	0.4	1	3	GHz
Attenuation, Typ	7.5	11	21	38	58	dB/100ft
	24.61	36.09	68.9	124.67	190.29	dB/100m

Mechanical Specifications

Diameter	0.102 in [2.59 mm]
Weight	0.01 lbs/ft [0.01 Kg/m]

Construction Specifications

Description	Material and Plating	Diameter
Inner Conductor	Copper Clad Steel, Silver7	0.02 in 0.51 mm
Conductor Type	Stranded	
Dielectric	PTFE	0.06 in 1.52 mm
First Shield	Silver Plated Copper Braid 95% coverage	0.081 in 2.06 mm
Jacket	FEP, Tan	0.102 in [2.59 mm]

Environmental Specifications

Temperature

Operating Range	-55 to +200 deg C

Click the following link (or enter part number in “SEARCH” on website) to obtain additional part information including price, inventory and certifications: Flexible RG316 Coax Cable Single Shielded with Tan FEP Jacket RG316/U

Pasternack Enterprises, Inc. • P.O. Box 16759, Irvine, CA 92623
Phone: (866) 727-8376 or (949) 261-1920 • **Fax:** (949) 261-7451
Sales@Pasternack.com • Techsupport@Pasternack.com

© 2019 Pasternack Enterprises All Rights Reserved

Flexible RG316 Coax Cable Single Shielded with Tan FEP Jacket

Compliance Certifications (see product page for current document)

Plotted and Other Data

Notes:

Flexible RG316 Coax Cable Single Shielded with Tan FEP Jacket from Pasternack Enterprises has same day shipment for domestic and International orders. Our RF, microwave and millimeter wave products maintain a 99.4% availability and are part of the broadest selection in the industry.

Click the following link (or enter part number in “SEARCH” on website) to obtain additional part information including price, inventory and certifications: Flexible RG316 Coax Cable Single Shielded with Tan FEP Jacket RG316/U

URL: https://www.pasternack.com/flexible-rg316u-fep-jacket-silver-plated-copper-braid-outer-conductor-single-shielded-rg316-u-p.aspx

The information contained in this document is accurate to the best of our knowledge and representative of the part described herein. It may be necessary to make modifications to the part and/or the documentation of the part, in order to implement improvements. Pasternack reserves the right to make such changes as required. Unless otherwise stated, all specifications are nominal. Pasternack does not make any representation or warranty regarding the suitability of the part described herein for any particular purpose, and Pasternack does not assume any liability arising out of the use of any part or documentation.

Pasternack Enterprises, Inc. • P.O. Box 16759, Irvine, CA 92623
Phone: (866) 727-8376 or (949) 261-1920 • **Fax:** (949) 261-7451
Sales@Pasternack.com • Techsupport@Pasternack.com

© 2019 Pasternack Enterprises All Rights Reserved

RG316/U CAD Drawing

Flexible RG316 Coax Cable Single Shielded with Tan FEP Jacket

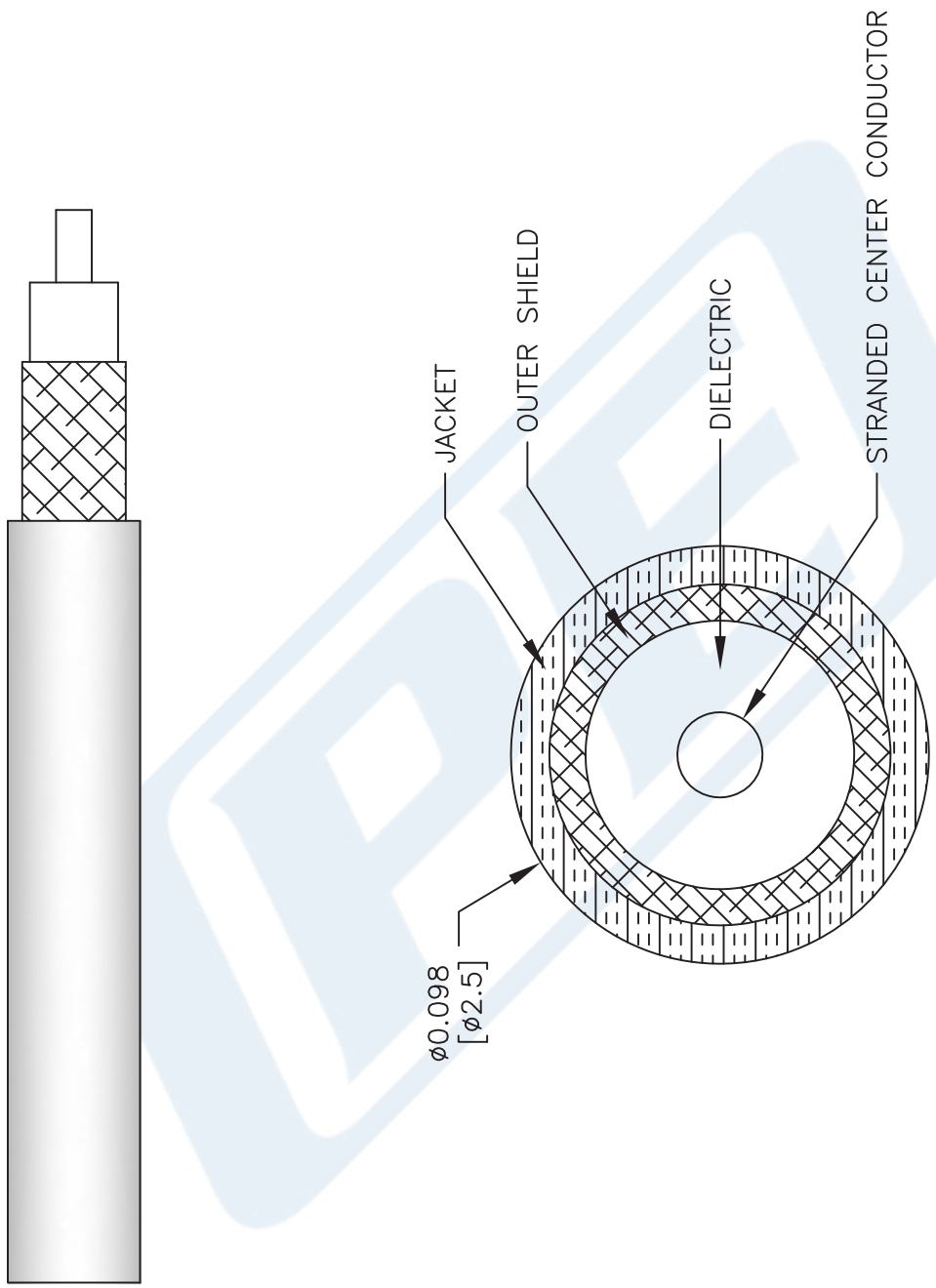

NOTES:
1. UNLESS OTHERWISE SPECIFIED ALL DIMENSIONS ARE NOMINAL.
2. ALL SPECIFICATIONS ARE SUBJECT TO CHANGE WITHOUT NOTICE AT ANY TIME.
3. DIMENSIONS ARE IN INCHES [mm].

DWG TITLE
RG316/U

FSCM NO. 53919

CAD FILE 111716 | SCALE N/A | SIZE A | 41742

PASTERNACK®
THE ENGINEER'S RF SOURCE
Pasternack Enterprises, Inc.
P.O. Box 16759 | Irvine | CA | 92623
Phone: (949) 261-1920 | **Fax:** (949) 261-7451
Website: www.pasternack.com | **E-Mail:** sales@pasternack.com

© 2019 Pasternack Enterprises All Rights Reserved