PASTERNACK
an INFINITE brand

2.92mm Male Precision Connector Clamp/Solder Attachment for PE-SR405AL, PE-SR405FL, PE-SR405FLJ, PE-SR405TN, RG405

RF Connectors
Technical Data Sheet

PE44796

Configuration

- 2.92mm Male Connector
- 50 Ohms
- Straight Body Geometry
- Connector Interface Types: PE-SR405AL, PE-SR-405FL, PE-SR405FLJ, PE-SR405TN, RG405
- 5/16 inch Hex
- Precision Design

Features

- Max. Operating Frequency 40 GHz
- Excellent VSWR of 1.18:1
- Gold over Nickel Plated Beryllium Copper Contact
- 50 µin minimum contact plating

Applications

- General Purpose Test
- Precision Test & Measurement
- Custom Cable Assemblies

Description

Pasternack's PE44796 2.92mm male connector with clamp/solder attachment for PE-SR405AL, PE-SR405FL, PE-SR405FLJ, PE-SR405TN and RG405 is part of our full line of RF components available for same-day shipping. Our 2.92mm male connector operates up to a maximum frequency of 40 GHz and offers excellent VSWR of 1.18:1.

Our 2.92mm male connector PE44796 datasheet specifications and drawing with dimensions are shown below in this PDF. Pasternack's broad catalog of RF, microwave and millimeter wave connectors allows designers to configure and customize their signal connections however they like. Whether the need is to provide an I/O for a board design, or simply create a custom cable assembly configuration, Pasternack has the right connector for the job. Pasternack can also expertly build your custom cable assemblies for you and ship same-day.

Electrical Specifications

Description	Minimum	Typical	Maximum	Units
Frequency Range	DC		40	GHz
VSWR			1.18:1	
Insertion Loss			0.26	dB
Operating Voltage (AC)			170	Vrms
Dielectric Withstanding Voltage (AC)			500	Vrms
High Potential Voltage 5 to 7.5 MHz			325	Vrms
Corona Discharge at 70,000 ft			125	Vrms
Insulation Resistance	5,000			MOhms

Click the following link (or enter part number in "SEARCH" on website) to obtain additional part information including price, inventory and certifications: 2.92mm Male Precision Connector Clamp/Solder Attachment for PE-SR405AL, PE-SR405FL, PE-SR405FLJ, PE-SR405TN, RG405 PE44796

Pasternack Enterprises, Inc. • P.O. Box 16759, Irvine, CA 92623
Phone: (866) 727-8376 or (949) 261-1920 • **Fax:** (949) 261-7451
Sales@Pasternack.com • Techsupport@Pasternack.com

© 2020 Pasternack Enterprises All Rights Reserved

2.92mm Male Precision Connector Clamp/Solder Attachment for PE-SR405AL, PE-SR405FL, PE-SR405FLJ, PE-SR405TN, RG405

Performance by Frequency

Description	F1	F2	F3	F4	F5	Units
Frequency Range	DC to 18	18 to 26.5	26.5 to 40			GHz
VSWR, Max	1.12:1	1.14:1	1.18:1			

Electrical Specification Notes:
Insertion loss: 0.04 x sqrt(fGHz) dB max.

Mechanical Specifications

Size

Length	0.813 in [20.65 mm]
Width/Dia.	0.315 in [8.00 mm]
Weight	0.013 lbs [5.9 g]
Mating Cycles	500 Cycles
Mating Torque	8 to 10 in-lbs [0.90 to 1.13 Nm]

Material Specifications

Description	Material	Plating
Contact	Beryllium Copper	Gold over Nickel 50 µin minimum
Insulation	PCTFE	
Body	Passivated Stainless Steel	SAE-AMS-2700
Coupling Nut	Passivated Stainless Steel	SAE-AMS-2700

Environmental Specifications

Temperature

Operating Range	-65 to +165 deg C
Humidity	MIL-STD-202, Method 106, No Vibration
Shock	MIL-STD-202, Method 213, Condition I
Vibration	MIL-STD-202, Method 204, Condition D
Thermal Shock	MIL-STD-202, Method 107, Condition B
Salt Spray	MIL-STD-202, Method 101, Condition B (5%)

Click the following link (or enter part number in “SEARCH” on website) to obtain additional part information including price, inventory and certifications: 2.92mm Male Precision Connector Clamp/Solder Attachment for PE-SR405AL, PE-SR405FL, PE-SR405FLJ, PE-SR405TN, RG405 PE44796

Pasternack Enterprises, Inc. • P.O. Box 16759, Irvine, CA 92623
Phone: (866) 727-8376 or (949) 261-1920 • **Fax:** (949) 261-7451
Sales@Pasternack.com • Techsupport@Pasternack.com

© 2020 Pasternack Enterprises All Rights Reserved

2.92mm Male Precision Connector Clamp/Solder Attachment for PE-SR405AL, PE-SR405FL, PE-SR405FLJ, PE-SR405TN, RG405

Compliance Certifications (see product page for current document)

Plotted and Other Data

Notes:

2.92mm Male Precision Connector Clamp/Solder Attachment for PE-SR405AL, PE-SR405FL, PE-SR405FLJ, PE-SR405TN, RG405 from Pasternack Enterprises has same day shipment for domestic and International orders. Our RF, microwave and millimeter wave products maintain a 99.4% availability and are part of the broadest selection in the industry.

Click the following link (or enter part number in “SEARCH” on website) to obtain additional part information including price, inventory and certifications: 2.92mm Male Precision Connector Clamp/Solder Attachment for PE-SR405AL, PE-SR405FL, PE-SR405FLJ, PE-SR405TN, RG405 PE44796

URL: https://www.pasternack.com/2.92mm-male-pe-sr405al-pe-sr405fl-pe-sr405tn-rg405-connector-pe44796-p.aspx

The information contained in this document is accurate to the best of our knowledge and representative of the part described herein. It may be necessary to make modifications to the part and/or the documentation of the part, in order to implement improvements. Pasternack reserves the right to make such changes as required. Unless otherwise stated, all specifications are nominal. Pasternack does not make any representation or warranty regarding the suitability of the part described herein for any particular purpose, and Pasternack does not assume any liability arising out of the use of any part or documentation.

Pasternack Enterprises, Inc. • P.O. Box 16759, Irvine, CA 92623
Phone: (866) 727-8376 or (949) 261-1920 • **Fax:** (949) 261-7451
Sales@Pasternack.com • Techsupport@Pasternack.com

© 2020 Pasternack Enterprises All Rights Reserved

PE44796 CAD Drawing

2.92mm Male Precision Connector Clamp/Solder Attachment for PE-SR405AL, PE-SR405FL, PE-SR405FLJ, PE-SR405TN, RG405

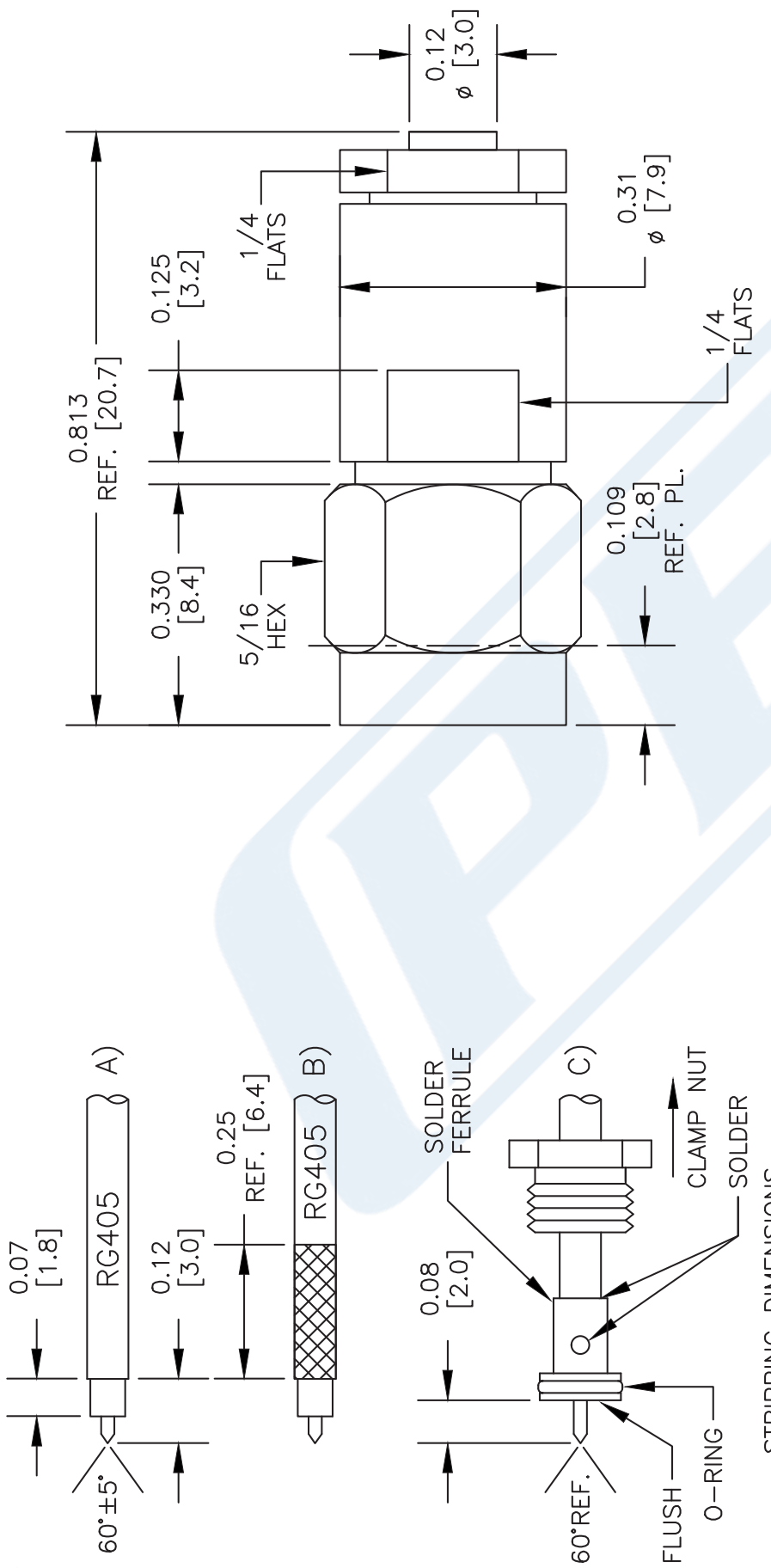

STRIPPING DIMENSIONS

ASSEMBLY PROCEDURES

1. STRIP CABLE AS SHOWN IN (A). DO NOT NICK DIELECTRIC.
2. PRE-TIN CABLE JACKET TO APPROXIMATE DIMENSION AS SHOWN IN (B).
3. INSERT CABLE THRU ADAPTER UNTIL IT BOTTOMS OUT. SOLDER OUTER CONDUCTOR TO ADAPTER & TRIM DIELECTRIC AS SHOWN IN (C).
4. SCREW ASSEMBLY INTO BODY & TIGHTEN NUT USING 30 IN-LBS OF TORQUE.

NOTES:
1. UNLESS OTHERWISE SPECIFIED ALL DIMENSIONS ARE NOMINAL.
2. ALL SPECIFICATIONS ARE SUBJECT TO CHANGE WITHOUT NOTICE AT ANY TIME.
3. DIMENSIONS ARE IN INCHES [mm].
4. FITS MIL-C-17 AND EQUIVALENT CABLES.

DWG TITLE
PE44796

FSCM NO. 53919

CAD FILE 042313 | SCALE N/A | SIZE A | 2233

PASTERNACK®
Pasternack Enterprises, Inc.
P.O. Box 16759 | Irvine | CA | 92623
Phone: (949) 261-1920 | Fax: (949) 261-7451
Website: www.pasternack.com | E-Mail: sales@pasternack.com

© 2020 Pasternack Enterprises All Rights Reserved

MATERIALS	
BODY	BRASS NICKEL PLATED
CONTACT	GOLD PLATED
INSULATOR	PTFE
SOLDER ADAPTER	BRASS GOLD PLATED

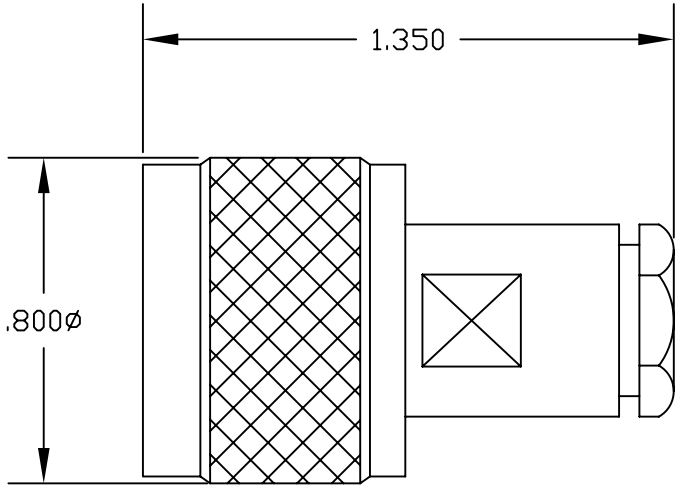

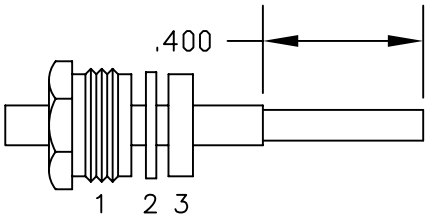

ASSEMBLY (A)

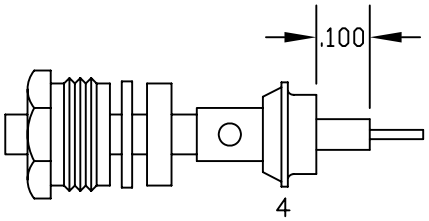

ASSEMBLY (B)

ASSEMBLY PROCEDURES

1. SLIDE CLAMP NUT (1), WASHER (2) & GASKET (3) OVER CABLE. STRIP CABLE AS SHOWN IN ASSEMBLY (A). DO NOT CUT DIELECTRIC.

2. SLIDE ADAPTER (4) OVER CABLE UNTIL ADAPTER (4) BOTTOMS ON OUTER CONDUCTOR. SOLDER ADAPTER (4) TO OUTER CONDUCTOR USING MINIMUM HEAT.

3. STRIP CABLE AS SHOWN IN ASSEMBLY (B). SOLDER CONTACT TO CENTER CONDUCTOR. SLIDE ASSEMBLY FORWARD & TIGHTEN TO BODY.

PASTERNACK ENTERPRISES®
ESTABLISHED 1972

PASTERNACK ENTERPRISES, INC.
P.O BOX 16759, IRVINE, CA 92623
PHONE (949) 261-1920 FAX (949) 261-7451

WEB ADDRESS: www.pasternack.com
E-MAIL ADDRESS: sales@pasternack.com

COAXIAL & FIBER OPTICS

DWG TITLE	DES.
PE4129	N MALE, SOLDER/CLAMP ATTACHMENT FOR RG405, PE-SR405AL & PE-SR405FL

REV. -	FSCM NO. 53919	CAD FILE 042309	SCALE N/A	SIZE A	147

NOTES:
1. UNLESS OTHERWISE SPECIFIED ALL DIMENSIONS ARE NOMINAL.
2. ALL SPECIFICATIONS ARE SUBJECT TO CHANGE WITHOUT NOTICE AT ANY TIME.
3. DIMENSIONS ARE IN INCHES.

PASTERNACK®
THE ENGINEER'S RF SOURCE

Flexible PE-P086HF Coax Cable Double Shielded with Blue FEP Jacket

RF Cables Technical Data Sheet PE-P086HF

Configuration

- Flexible Cable
- 2 Shield(s)

Description

Pasternack's PE-P086HF is a flexible, high frequency coaxial cable that provides similar loss characteristics to semi-rigid cable and low VSWR of 1.3:1 maximum up to 40 GHz. The low loss coax cable features silver-plated conductors and dual shields to maintain a shielding effectiveness of 110 dB. The size of the conductors for this low VSWR coax was specifically chosen to allow termination with standard connectors designed for M17/133-RG405 and other M17/133 cables. The outer shield is coated with a tough, chemical and heat resistant jacket. This PE-P086HF flexible low loss coaxial cable is a great choice for short length, high frequency system hook-up or jumper cable applications. The Pasternack coax cable can also be used as a replacement option for bent semi-rigid cable assemblies when length and routing are considered.

Electrical Specifications

Description	Minimum	Typical	Maximum	Units
Frequency Range	DC		40	GHz
Impedance		50 ±2		Ohms
Velocity of Propagation		70		%
Nominal Capacitance		29.4 [96.46]		pF/ft [pF/m]

Click the following link (or enter part number in "SEARCH" on website) to obtain additional part information including price, inventory and certifications: Flexible PE-P086HF Coax Cable Double Shielded with Blue FEP Jacket PE-P086HF

Pasternack Enterprises, Inc. • P.O. Box 16759, Irvine, CA 92623
Phone: (866) 727-8376 or (949) 261-1920 • **Fax:** (949) 261-7451
Sales@Pasternack.com • Techsupport@Pasternack.com

© 2017 Pasternack Enterprises All Rights Reserved

Flexible PE-P086HF Coax Cable Double Shielded with Blue FEP Jacket

RF Cables Technical Data Sheet PE-P086HF

Performance by Frequency Band

Description	F1	F2	F3	F4	F5	Units
Frequency	0.4	1	2	2.4	3	GHz
Attenuation, Max	13.1	21.1	30.5	33.7	38	dB/100ft
	42.98	69.23	100.07	110.56	124.67	dB/100m
Attenuation, Typ	11.9	19.2	27.7	30.6	34.5	dB/100ft
	39.04	62.99	90.88	100.39	113.19	dB/100m

Description	F6	F7	F8	F9	F10	Units
Frequency	5	10	18	40		GHz
Attenuation, Max	50.3	74.3	104.6	170.3		dB/100ft
	165.03	243.77	343.18	558.73		dB/100m
Attenuation, Typ	45.7	67.5	95.1	154.8		dB/100ft
	149.93	221.46	312.01	507.87		dB/100m

Mechanical Specifications

Diameter	0.104 in [2.64 mm]
Weight	0.013 lbs/ft [0.02 Kg/m]
Min. Bend Radius (Installation)	0.52 in [13.21 mm]

Construction Specifications

Description	Material and Plating	Diameter
Inner Conductor	Copper Clad Steel, Silver, 1 Strands	0.02 in [0.51 mm]
Conductor Type	Solid	
Dielectric	PTFE	0.064 in [1.63 mm]
First Shield	Silver Plated Copper Tape	
Second Shield	Silver Plated Copper Braid	

Click the following link (or enter part number in "SEARCH" on website) to obtain additional part information including price, inventory and certifications: Flexible PE-P086HF Coax Cable Double Shielded with Blue FEP Jacket PE-P086HF

Pasternack Enterprises, Inc. • P.O. Box 16759, Irvine, CA 92623
Phone: (866) 727-8376 or (949) 261-1920 • **Fax:** (949) 261-7451
Sales@Pasternack.com • Techsupport@Pasternack.com

© 2017 Pasternack Enterprises All Rights Reserved

Flexible PE-P086HF Coax Cable Double Shielded with Blue FEP Jacket

Jacket	FEP, Blue	0.104 in [2.64 mm]

Environmental Specifications

Temperature

Operating Range	-55 to +200 deg C

Compliance Certifications (see product page for current document)

Plotted and Other Data

Notes:

Flexible PE-P086HF Coax Cable Double Shielded with Blue FEP Jacket from Pasternack Enterprises has same day shipment for domestic and International orders. Our RF, microwave and millimeter wave products maintain a 99.4% availability and are part of the broadest selection in the industry.

Click the following link (or enter part number in "SEARCH" on website) to obtain additional part information including price, inventory and certifications: Flexible PE-P086HF Coax Cable Double Shielded with Blue FEP Jacket PE-P086HF

URL: https://www.pasternack.com/50-ohm-flexible-invalid-alias-fep-jacket-silver-plated-copper-tape-over-silver-plated-copper-braid-outer-conductor-double-shielded-blue-pe-p086hf-p.aspx

The information contained in this document is accurate to the best of our knowledge and representative of the part described herein. It may be necessary to make modifications to the part and/or the documentation of the part, in order to implement improvements. Pasternack reserves the right to make such changes as required. Unless otherwise stated, all specifications are nominal. Pasternack does not make any representation or warranty regarding the suitability of the part described herein for any particular purpose, and Pasternack does not assume any liability arising out of the use of any part or documentation.

Pasternack Enterprises, Inc. • P.O. Box 16759, Irvine, CA 92623
Phone: (866) 727-8376 or (949) 261-1920 • **Fax:** (949) 261-7451
Sales@Pasternack.com • Techsupport@Pasternack.com

© 2017 Pasternack Enterprises All Rights Reserved

PE-P086HF CAD Drawing

Flexible PE-P086HF Coax Cable Double Shielded with Blue FEP Jacket

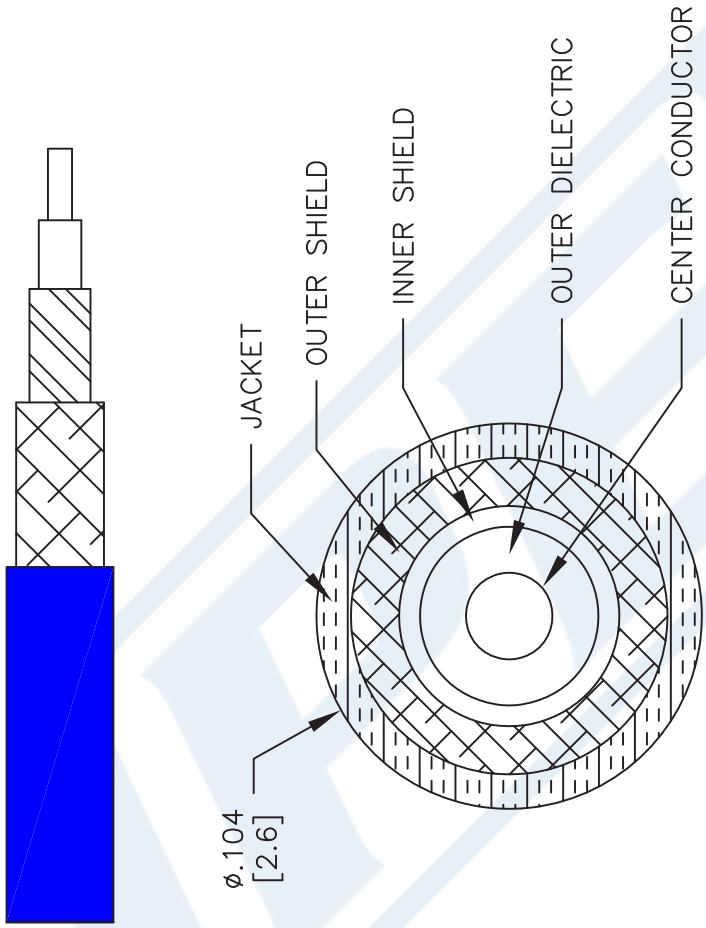

NOTES:
1. UNLESS OTHERWISE SPECIFIED ALL DIMENSIONS ARE NOMINAL.
2. ALL SPECIFICATIONS ARE SUBJECT TO CHANGE WITHOUT NOTICE AT ANY TIME.
3. DIMENSIONS ARE IN INCHES [mm].

DWG TITLE
PE-P086HF

CAD FILE 041317 | SCALE N/A | SIZE A | 2233

CAGE CODE 53919

PASTERNACK®
THE ENGINEER'S RF SOURCE
Pasternack Enterprises, Inc.
P.O. Box 16759 | Irvine | CA | 92623
Phone: (949) 261-1920 | **Fax:** (949) 261-7451
Website: www.pasternack.com | **E-Mail:** sales@pasternack.com

© 2017 Pasternack Enterprises All Rights Reserved