PASTERNACK®
THE ENGINEER'S RF SOURCE

# SMA Male Connector Solder Attachment for PE-SR405AL, PE-SR405FL, RG405

## RF Connectors Technical Data Sheet PE4005

## Configuration

- SMA Male Connector
- MIL-STD-348A
- 50 Ohms
- Straight Body Geometry
- PE-SR405AL, PE-SR405FL, RG405 Interface Type
- Solder/Solder Attachment
- 5/16 inch Hex

## Features

- Max. Operating Frequency 18 GHz
- Good VSWR of 1.5:1
- Gold Plated Brass Contact
- 50 µin minimum contact plating

## Applications

- General Purpose Test
- Custom Cable Assemblies

### Description

Pasternack's PE4005 SMA male connector with solder/solder attachment for PE-SR405AL, PE-SR405FL and RG405 is part of our full line of RF components available for same-day shipping. Our SMA male connector operates up to a maximum frequency of 18 GHz and offers good VSWR of 1.5:1.

Our SMA male connector PE4005 datasheet specifications and drawing with dimensions are shown below in this PDF. Pasternack's broad catalog of RF, microwave and millimeter wave connectors allows designers to configure and customize their signal connections however they like. Whether the need is to provide an I/O for a board design, or simply create a custom cable assembly configuration, Pasternack has the right connector for the job. Pasternack can also expertly build your custom cable assemblies for you and ship same-day.

### Electrical Specifications

| Description | Minimum | Typical | Maximum | Units |
|---|---|---|---|---|
| Frequency Range | DC | | 18 | GHz |
| VSWR | | | 1.5:1 | |
| Operating Voltage (AC) | | | 335 | Vrms |

### Mechanical Specifications

| | |
|---|---|
| **Size** | |
| Length | 0.406 in [10.31 mm] |
| Width/Dia. | 0.315 in [8.00 mm] |
| Weight | 0.011 lbs [4.99 g] |
| Mating Cycles | 500 Cycles |
| Mating Torque | 3 to 5 in-lbs [0.34 to 0.57 Nm] |

Click the following link (or enter part number in "SEARCH" on website) to obtain additional part information including price, inventory and certifications: SMA Male Connector Solder Attachment for PE-SR405AL, PE-SR405FL, RG405 PE4005

Pasternack Enterprises, Inc. • P.O. Box 16759, Irvine, CA 92623
**Phone:** (866) 727-8376 or (949) 261-1920 • **Fax:** (949) 261-7451
Sales@Pasternack.com • Techsupport@Pasternack.com

© 2016 Pasternack Enterprises All Rights Reserved

# SMA Male Connector Solder Attachment for PE-SR405AL, PE-SR405FL, RG405



**Material Specifications**

| Description | Material | Plating |
|---|---|---|
| Contact | Brass | Gold<br>50 µin minimum |
| Insulation | PTFE | |
| Body | Stainless Steel | Gold<br>10 µin minimum |
| Coupling Nut | Brass | Nickel<br>100 µin minimum |

## Environmental Specifications

**Temperature**

Operating Range -65 to +165 deg C

## Compliance Certifications (see product page for current document)

## Plotted and Other Data

Notes:

SMA Male Connector Solder Attachment for PE-SR405AL, PE-SR405FL, RG405 from Pasternack Enterprises has same day shipment for domestic and International orders. Our RF, microwave and millimeter wave products maintain a 99% availability and are part of the broadest selection in the industry.

Click the following link (or enter part number in "SEARCH" on website) to obtain additional part information including price, inventory and certifications: SMA Male Connector Solder Attachment for PE-SR405AL, PE-SR405FL, RG405 PE4005

URL: https://www.pasternack.com/sma-male-pe-sr405al-pe-sr405fl-pe-sr405flj-pe-sr405tn-rg405-connector-pe4005-p.aspx

The information contained in this document is accurate to the best of our knowledge and representative of the part described herein. It may be necessary to make modifications to the part and/or the documentation of the part, in order to implement improvements. Pasternack reserves the right to make such changes as required. Unless otherwise stated, all specifications are nominal. Pasternack does not make any representation or warranty regarding the suitability of the part described herein for any particular purpose, and Pasternack does not assume any liability arising out of the use of any part or documentation.

Pasternack Enterprises, Inc. • P.O. Box 16759, Irvine, CA 92623
**Phone:** (866) 727-8376 or (949) 261-1920 • **Fax:** (949) 261-7451
Sales@Pasternack.com • Techsupport@Pasternack.com

© 2016 Pasternack Enterprises All Rights Reserved

# PE4005 CAD Drawing

SMA Male Connector Solder Attachment for PE-SR405AL, PE-SR405FL, RG405

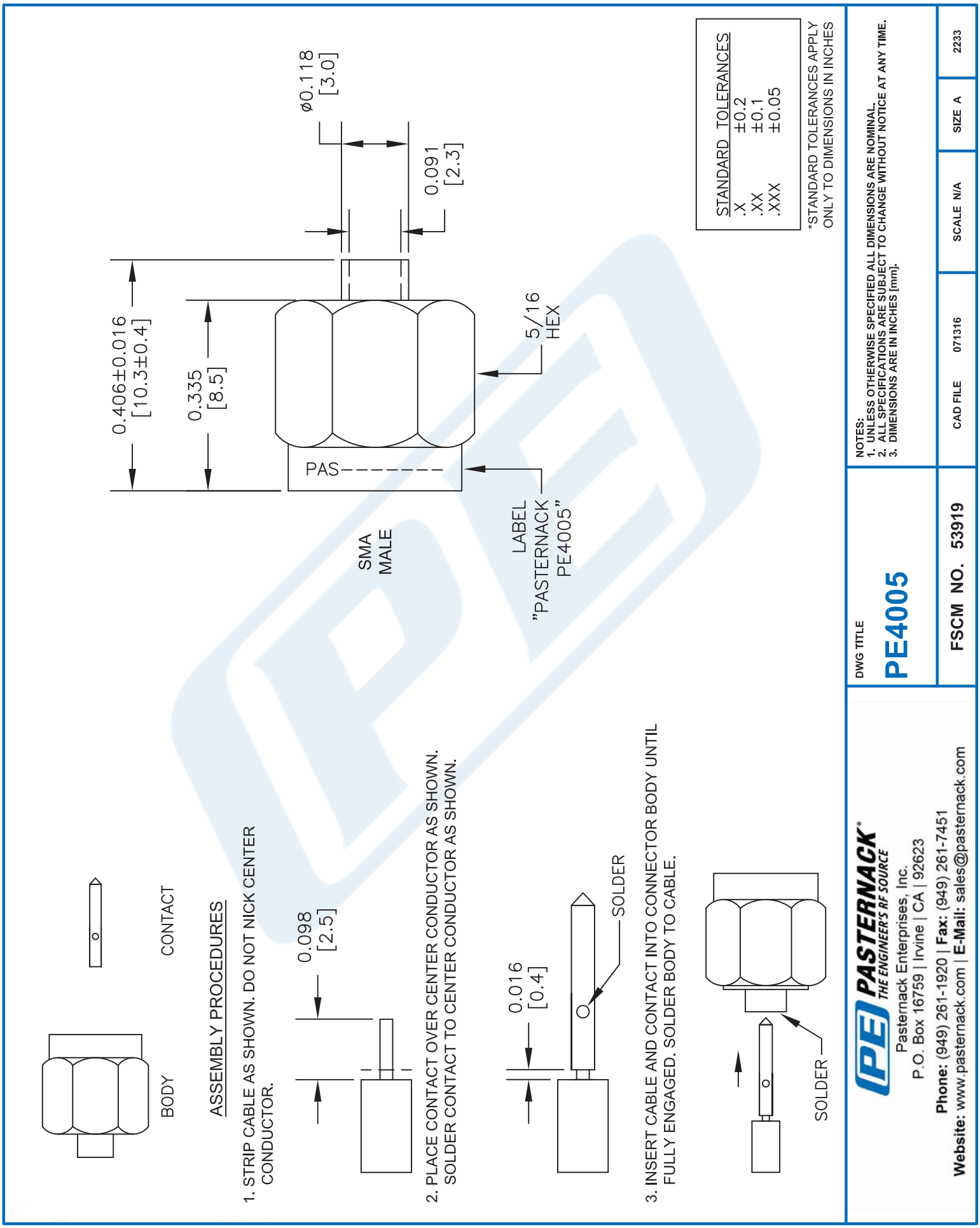


© 2016 Pasternack Enterprises All Rights Reserved

PASTERNACK
an INFINITE brand

# SMP Female Right Angle Connector Solder Attachment for PE-SR405AL, PE-SR405FL, PE-SR405FLJ, PE-SR405TN, RG405

## RF Connectors
## Technical Data Sheet

**PE44275**

## Configuration

- SMP Female Connector
- MIL-STD-348A
- 50 Ohms
- Right Angle Body Geometry
- Connector Interface Types: PE-SR405AL, PE-SR405FL, PE-SR405FLJ, PE-SR405TN, RG405

## Features

- Max. Operating Frequency 12.4 GHz
- Good VSWR of 1.38:1
- Gold Plated Beryllium Copper Contact
- Blind Mate Connector

## Applications

- General Purpose Test
- Custom Cable Assemblies

### Description

Pasternack's PE44275 Right Angle, SMP, Standard, Connector is part of our full line of RF components available for same-day shipping. Our SMP female connector operates up to a maximum frequency of 12.4 GHz and offers good VSWR of 1.38:1. The Pasternack blind mate connector is ideal for applications where direct visual or tactile access to the connection point is not possible, for example, when two circuit boards need to be mated. Its right angle body geometry allows for easier connections in tight spaces.

Our SMP female right angle connector PE44275 datasheet specifications and drawing with dimensions are shown below in this PDF. Pasternack's broad catalog of RF, microwave and millimeter wave connectors allows designers to configure and customize their signal connections however they like. Whether the need is to provide an I/O for a board design, or simply create a custom cable assembly configuration, Pasternack has the right connector for the job. Pasternack can also expertly build your custom cable assemblies for you and ship same-day.

### Electrical Specifications

| Description | Minimum | Typical | Maximum | Units |
|---|---|---|---|---|
| Frequency Range | DC | | 12.4 | GHz |
| VSWR | | | 1.38:1 | |
| Operating Voltage (AC) | | | 335 | Vrms |
| Impedance | | 50 | | Ohms |
| Test Voltage (AC) | | | 500 | Vrms |
| Inner Conductor DC Resistance | | | 6 | mOhms |
| Outer Conductor DC Resistance | | | 2 | mOhms |
| Insulation Resistance | 5,000 | | | MOhms |

Click the following link (or enter part number in "SEARCH" on website) to obtain additional part information including price, inventory and certifications: SMP Female Right Angle Connector Solder Attachment for PE-SR405AL, PE-SR405FL, PE-SR405FLJ, PE-SR405TN, RG405 PE44275

Pasternack Enterprises, Inc. • P.O. Box 16759, Irvine, CA 92623
**Phone:** (866) 727-8376 or (949) 261-1920 • **Fax:** (949) 261-7451
Sales@Pasternack.com • Techsupport@Pasternack.com

© 2020 Pasternack Enterprises All Rights Reserved

# SMP Female Right Angle Connector Solder Attachment for PE-SR405AL, PE-SR405FL, PE-SR405FLJ, PE-SR405TN, RG405

## RF Connectors
## Technical Data Sheet

**PE44275**

### Performance by Frequency

| Description | F1 | F2 | F3 | F4 | F5 | Units |
|---|---|---|---|---|---|---|
| Frequency Range | DC to 6 | 6 to 12 | 12 to 26.5 | | | GHz |
| VSWR, Max | 1.11:1 | 1.23:1 | 1.38:1 | | | |

Electrical Specification Notes:
Insertion loss = 0.1 x sqrt(fGHz) dB max.

## Mechanical Specifications

### Size

| | |
|---|---|
| Length | 0.26 in [6.60 mm] |
| Width | 0.19 in [4.83 mm] |
| Height | 0.00 in [0.00 mm] |
| Weight | 0.00 lbs [0.91 g] |

### Material Specifications

| Description | Material | Plating |
|---|---|---|
| Contact | Beryllium Copper | Gold |
| Insulation | PTFE | |
| Body | Beryllium Copper | Gold |

Mechanical Specification Notes:
Mating cycles: 1,000 (smooth bore), 500 (limited detent), 100 (full detent) minimum.

## Environmental Specifications

### Temperature

| | |
|---|---|
| Operating Range | -65 to +155 deg C |
| Humidity | MIL-STD-202, Method 106 |
| Shock | MIL-STD-202, Method 213, Condition A |
| Vibration | MIL-STD-202, Method 204, Condition B |
| Thermal Shock | MIL-STD-202, Method 107, Condition B |

## Compliance Certifications (see product page for current document)

## Plotted and Other Data

Notes:

Click the following link (or enter part number in “SEARCH” on website) to obtain additional part information including price, inventory and certifications: SMP Female Right Angle Connector Solder Attachment for PE-SR405AL, PE-SR405FL, PE-SR405FLJ, PE-SR405TN, RG405 PE44275

Pasternack Enterprises, Inc. • P.O. Box 16759, Irvine, CA 92623
**Phone:** (866) 727-8376 or (949) 261-1920 • **Fax:** (949) 261-7451
Sales@Pasternack.com • Techsupport@Pasternack.com

© 2020 Pasternack Enterprises All Rights Reserved

# SMP Female Right Angle Connector Solder Attachment for PE-SR405AL, PE-SR405FL, PE-SR405FLJ, PE-SR405TN, RG405

## RF Connectors
## Technical Data Sheet

**PE44275**

SMP Female Right Angle Connector Solder Attachment for PE-SR405AL, PE-SR405FL, PE-SR405FLJ, PE-SR405TN, RG405 from Pasternack Enterprises has same day shipment for domestic and International orders. Our RF, microwave and millimeter wave products maintain a 99.4% availability and are part of the broadest selection in the industry.

Click the following link (or enter part number in “SEARCH” on website) to obtain additional part information including price, inventory and certifications: SMP Female Right Angle Connector Solder Attachment for PE-SR405AL, PE-SR405FL, PE-SR405FLJ, PE-SR405TN, RG405 PE44275

URL: https://www.pasternack.com/smp-female-standard-pe-sr405al-pe-sr405fl-rg405-connector-pe44275-p.aspx

The information contained in this document is accurate to the best of our knowledge and representative of the part described herein. It may be necessary to make modifications to the part and/or the documentation of the part, in order to implement improvements. Pasternack reserves the right to make such changes as required. Unless otherwise stated, all specifications are nominal. Pasternack does not make any representation or warranty regarding the suitability of the part described herein for any particular purpose, and Pasternack does not assume any liability arising out of the use of any part or documentation.

Pasternack Enterprises, Inc. • P.O. Box 16759, Irvine, CA 92623
**Phone:** (866) 727-8376 or (949) 261-1920 • **Fax:** (949) 261-7451
Sales@Pasternack.com • Techsupport@Pasternack.com

© 2020 Pasternack Enterprises All Rights Reserved

# PE44275 CAD Drawing

SMP Female Right Angle Connector Solder Attachment for PE-SR405AL, PE-SR405FL, PE-SR405FLJ, PE-SR405TN, RG405

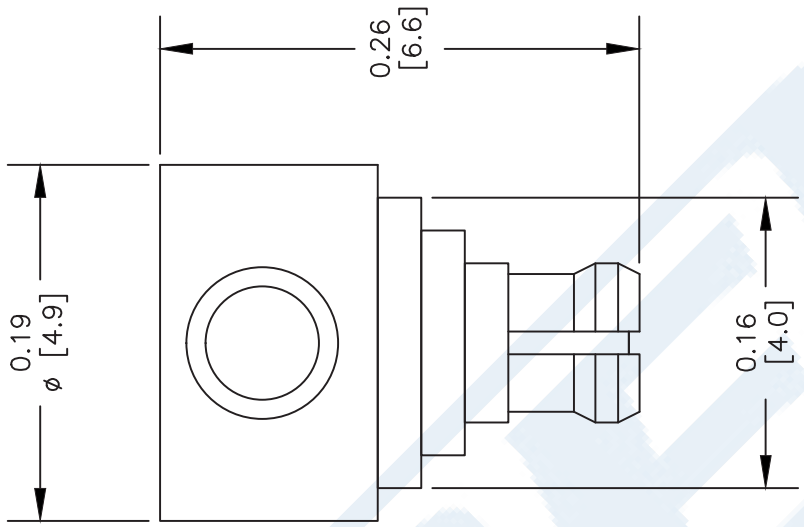


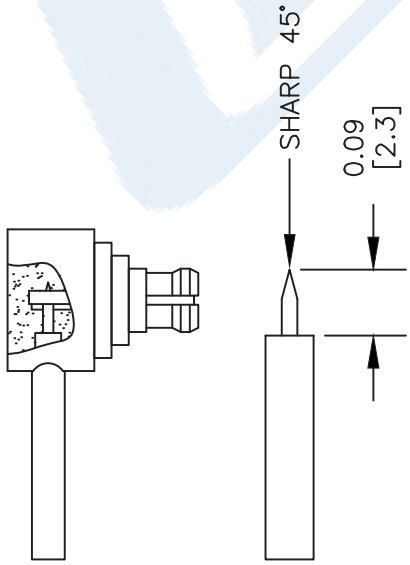


STRIPPING DIMENSIONS

ASSEMBLY PROCEDURES

1. STRIP CABLE AS SHOWN & SHARP CENTER CONDUCTOR.
2. INSERT CABLE INTO BODY UNTIL IT SITS IN PLACE. SOLDER CENTER CONDUCTOR IN PLACE.
3. SOLDER OUTER CONDUCTOR TO BODY. PRESS DOWN CAP.

NOTES:
1. UNLESS OTHERWISE SPECIFIED ALL DIMENSIONS ARE NOMINAL.
2. ALL SPECIFICATIONS ARE SUBJECT TO CHANGE WITHOUT NOTICE AT ANY TIME.
3. DIMENSIONS ARE IN INCHES [mm].
4. FITS MIL-C-17 AND EQUIVALENT CABLES.

DWG TITLE **PE44275**

| REV. A | FSCM NO. 53919 | CAD FILE 022912 | SCALE N/A | SIZE A | 2233 |
|---|---|---|---|---|---|

PASTERNACK®
Pasternack Enterprises, Inc.
P.O. Box 16759 | Irvine | CA | 92623
**Phone:** (949) 261-1920 | **Fax:** (949) 261-7451
**Website:** www.pasternack.com | **E-Mail:** sales@pasternack.com

© 2020 Pasternack Enterprises All Rights Reserved

PASTERNACK®
THE ENGINEER'S RF SOURCE

# Flexible PE-P086HF Coax Cable Double Shielded with Blue FEP Jacket

## RF Cables Technical Data Sheet PE-P086HF

### Configuration

- Flexible Cable
- 2 Shield(s)

### Description

Pasternack's PE-P086HF is a flexible, high frequency coaxial cable that provides similar loss characteristics to semi-rigid cable and low VSWR of 1.3:1 maximum up to 40 GHz. The low loss coax cable features silver-plated conductors and dual shields to maintain a shielding effectiveness of 110 dB. The size of the conductors for this low VSWR coax was specifically chosen to allow termination with standard connectors designed for M17/133-RG405 and other M17/133 cables. The outer shield is coated with a tough, chemical and heat resistant jacket. This PE-P086HF flexible low loss coaxial cable is a great choice for short length, high frequency system hook-up or jumper cable applications. The Pasternack coax cable can also be used as a replacement option for bent semi-rigid cable assemblies when length and routing are considered.

### Electrical Specifications

| Description | Minimum | Typical | Maximum | Units |
|---|---|---|---|---|
| Frequency Range | DC | | 40 | GHz |
| Impedance | | 50 ±2 | | Ohms |
| Velocity of Propagation | | 70 | | % |
| Nominal Capacitance | | 29.4 [96.46] | | pF/ft [pF/m] |

Click the following link (or enter part number in "SEARCH" on website) to obtain additional part information including price, inventory and certifications: Flexible PE-P086HF Coax Cable Double Shielded with Blue FEP Jacket PE-P086HF

Pasternack Enterprises, Inc. • P.O. Box 16759, Irvine, CA 92623
**Phone:** (866) 727-8376 or (949) 261-1920 • **Fax:** (949) 261-7451
Sales@Pasternack.com • Techsupport@Pasternack.com

© 2017 Pasternack Enterprises All Rights Reserved

# Flexible PE-P086HF Coax Cable Double Shielded with Blue FEP Jacket

## RF Cables Technical Data Sheet PE-P086HF

### Performance by Frequency Band

| Description | F1 | F2 | F3 | F4 | F5 | Units |
|---|---|---|---|---|---|---|
| Frequency | 0.4 | 1 | 2 | 2.4 | 3 | GHz |
| Attenuation, Max | 13.1 | 21.1 | 30.5 | 33.7 | 38 | dB/100ft |
| | 42.98 | 69.23 | 100.07 | 110.56 | 124.67 | dB/100m |
| Attenuation, Typ | 11.9 | 19.2 | 27.7 | 30.6 | 34.5 | dB/100ft |
| | 39.04 | 62.99 | 90.88 | 100.39 | 113.19 | dB/100m |

| Description | F6 | F7 | F8 | F9 | F10 | Units |
|---|---|---|---|---|---|---|
| Frequency | 5 | 10 | 18 | 40 | | GHz |
| Attenuation, Max | 50.3 | 74.3 | 104.6 | 170.3 | | dB/100ft |
| | 165.03 | 243.77 | 343.18 | 558.73 | | dB/100m |
| Attenuation, Typ | 45.7 | 67.5 | 95.1 | 154.8 | | dB/100ft |
| | 149.93 | 221.46 | 312.01 | 507.87 | | dB/100m |

### Mechanical Specifications

| | |
|---|---|
| Diameter | 0.104 in [2.64 mm] |
| Weight | 0.013 lbs/ft [0.02 Kg/m] |
| Min. Bend Radius (Installation) | 0.52 in [13.21 mm] |

### Construction Specifications

| Description | Material and Plating | Diameter |
|---|---|---|
| Inner Conductor | Copper Clad Steel, Silver, 1 Strands | 0.02 in [0.51 mm] |
| Conductor Type | Solid | |
| Dielectric | PTFE | 0.064 in [1.63 mm] |
| First Shield | Silver Plated Copper Tape | |
| Second Shield | Silver Plated Copper Braid | |

Click the following link (or enter part number in "SEARCH" on website) to obtain additional part information including price, inventory and certifications: Flexible PE-P086HF Coax Cable Double Shielded with Blue FEP Jacket PE-P086HF

Pasternack Enterprises, Inc. • P.O. Box 16759, Irvine, CA 92623
**Phone:** (866) 727-8376 or (949) 261-1920 • **Fax:** (949) 261-7451
Sales@Pasternack.com • Techsupport@Pasternack.com

© 2017 Pasternack Enterprises All Rights Reserved

Flexible PE-P086HF Coax Cable Double Shielded with Blue FEP Jacket



| | | |
|---|---|---|
| Jacket | FEP, Blue | 0.104 in [2.64 mm] |

## Environmental Specifications

**Temperature**

| | |
|---|---|
| Operating Range | -55 to +200 deg C |

**Compliance Certifications** (see product page for current document)

## Plotted and Other Data

Notes:

Flexible PE-P086HF Coax Cable Double Shielded with Blue FEP Jacket from Pasternack Enterprises has same day shipment for domestic and International orders. Our RF, microwave and millimeter wave products maintain a 99.4% availability and are part of the broadest selection in the industry.

Click the following link (or enter part number in "SEARCH" on website) to obtain additional part information including price, inventory and certifications: Flexible PE-P086HF Coax Cable Double Shielded with Blue FEP Jacket PE-P086HF

URL: https://www.pasternack.com/50-ohm-flexible-invalid-alias-fep-jacket-silver-plated-copper-tape-over-silver-plated-copper-braid-outer-conductor-double-shielded-blue-pe-p086hf-p.aspx

The information contained in this document is accurate to the best of our knowledge and representative of the part described herein. It may be necessary to make modifications to the part and/or the documentation of the part, in order to implement improvements. Pasternack reserves the right to make such changes as required. Unless otherwise stated, all specifications are nominal. Pasternack does not make any representation or warranty regarding the suitability of the part described herein for any particular purpose, and Pasternack does not assume any liability arising out of the use of any part or documentation.

Pasternack Enterprises, Inc. • P.O. Box 16759, Irvine, CA 92623
**Phone:** (866) 727-8376 or (949) 261-1920 • **Fax:** (949) 261-7451
Sales@Pasternack.com • Techsupport@Pasternack.com

© 2017 Pasternack Enterprises All Rights Reserved

# PE-P086HF CAD Drawing

Flexible PE-P086HF Coax Cable Double Shielded with Blue FEP Jacket

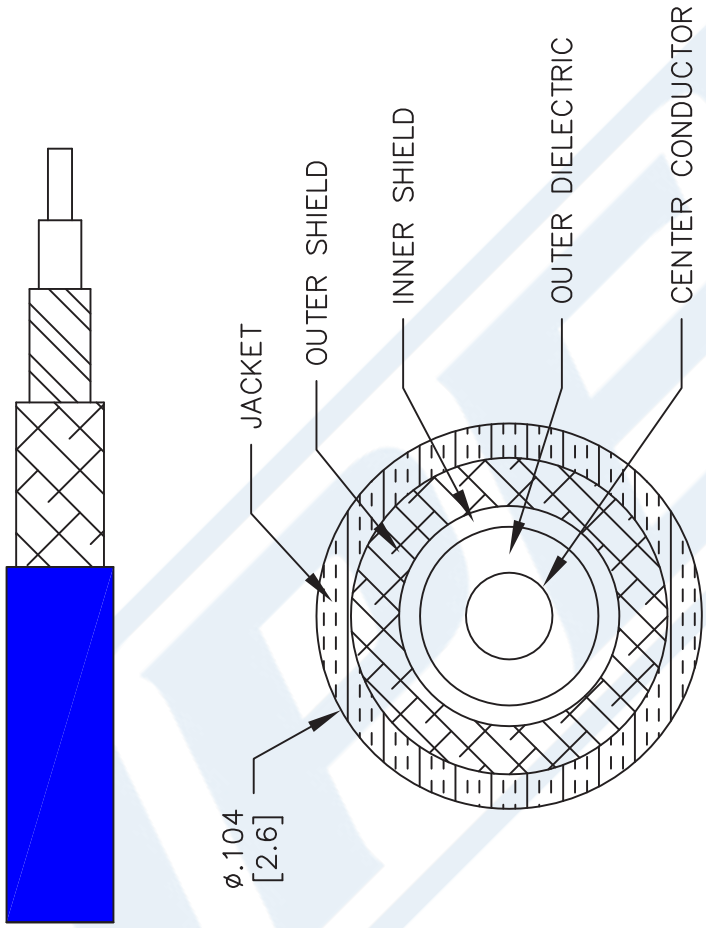


NOTES:
1. UNLESS OTHERWISE SPECIFIED ALL DIMENSIONS ARE NOMINAL.
2. ALL SPECIFICATIONS ARE SUBJECT TO CHANGE WITHOUT NOTICE AT ANY TIME.
3. DIMENSIONS ARE IN INCHES [mm].

DWG TITLE
**PE-P086HF**

CAD FILE 041317 | SCALE N/A | SIZE A | 2233

**CAGE CODE 53919**

PASTERNACK®
THE ENGINEER'S RF SOURCE
Pasternack Enterprises, Inc.
P.O. Box 16759 | Irvine | CA | 92623
**Phone:** (949) 261-1920 | **Fax:** (949) 261-7451
**Website:** www.pasternack.com | **E-Mail:** sales@pasternack.com

© 2017 Pasternack Enterprises All Rights Reserved