1.0/2.3 Male Right Angle Connector Crimp Attachment for LMR-195-FR, RG303, RG58, RG141, PE-C195, PE-P195, LMR-195, RG142, RG55, RG223



PE51767

Configuration

- 1.0/2.3 Male Connector
- 50 Ohms
- Right Angle Body Geometry
- Connector Interface Types: LMR-195-FR, RG303, RG58, RG141, PE-C195, PE-P195, LMR-195, RG142, RG55, RG223

Features

- Max. Operating Frequency 2 GHz
- Excellent VSWR of 1.2:1
- Gold over Nickel over Copper Plated Brass Contact

Applications

- General Purpose Test
- Custom Cable Assemblies

Description

Pasternack's PE51767 Right Angle 1.0/2.3 Male Connector Crimp Attachment for LMR-195-FR, RG303, RG58, RG141, PE-C195, PE-P195, LMR-195, RG142, RG55 and RG223 Cable is part of our full line of RF components available for same-day shipping. Our 1.0/2.3 male connector operates up to a maximum frequency of 2 GHz and offers excellent VSWR of 1.2:1. Its right angle body geometry allows for easier connections in tight spaces.

Our 1.0/2.3 male right angle connector PE51767 datasheet specifications and drawing with dimensions are shown below in this PDF. Pasternack's broad catalog of RF, microwave and millimeter wave connectors allows designers to configure and customize their signal connections however they like. Whether the need is to provide an I/O for a board design, or simply create a custom cable assembly configuration, Pasternack has the right connector for the job. Pasternack can also expertly build your custom cable assemblies for you and ship same-day.

Electrical Specifications

Description	Minimum	Typical	Maximum	Units
Frequency Range	DC		2	GHz
VSWR			1.2:1	
Insertion Loss			0.141	dB
Inner Conductor DC Resistance			10	mOhms
Outer Conductor DC Resistance			3	mOhms
Insulation Resistance	200			MOhms
Impedance		50		Ohms

Mechanical Specifications

Size

Length	0.85 in [21.59 mm]
Width	0.3 in [7.62 mm]
Height	0.815 in [20.7 mm]
Weight	0.01 lbs [4.54 g]
Mating Cycles	500 Cycles
Engagement Force	2.25lbs [1.02kg]
Disengagement Force	2.25lbs [1.02kg]

© 2025 Infinite Electronics, Inc. Pasternack is a registered trademark of Infinite Electronics, Inc.
+1 (866) 558-2786 | sales@pasternack.com | pasternack.com

1.0/2.3 Male Right Angle Connector Crimp Attachment for LMR-195-FR, RG303, RG58, RG141, PE-C195, PE-P195, LMR-195, RG142, RG55, RG223



PE51767

Material Specifications

Description	Material	Plating
Contact	Brass	Gold over Nickel over Copper
Insulation	Teflon	
Outer Conductor	Brass	Copper-Tin-Zinc Alloy
Body	Brass	Copper-Tin-Zinc Alloy

Environmental Specifications

Temperature

Operating Range	-55 to +125 deg C
Humidity	MIL-STD-202, Method 106
Thermal Shock	MIL-STD-202, Method 107, Condition B
Salt Spray	MIL-STD-202, Method 101, Condition B

Compliance Certifications (see product page for current document)

Plotted and Other Data

Notes:

1.0/2.3 Male Right Angle Connector Crimp Attachment for LMR-195-FR, RG303, RG58, RG141, PE-C195, PE-P195, LMR-195, RG142, RG55, RG223 from Pasternack Enterprises has same day shipment for domestic and International orders. Our RF, microwave and millimeter wave products maintain a 99.4% availability and are part of the broadest selection in the industry.

Click the following link (or enter part number in "SEARCH" on website) to obtain additional part information including price, inventory and certifications: 1.0/2.3 Male Right Angle Connector Crimp Attachment for LMR-195-FR, RG303, RG58, RG141, PE-C195, PE-P195, LMR-195, RG142, RG55, RG223 PE51767

URL: https://www.pasternack.com/1.0-2.3-male-fr-rg303-rg141-pe-c195-pe-p195-connector-pe51767.html

The information contained within this document is accurate to the best of our knowledge and representative of the part described herein. It may be necessary to make modifications to the part and/or the documentation of the part in order to impliment improvements. Pasternack Enterprises reserves the right to make such changes as required. Unless otherwise stated, all specifications are nominal. Pasternack Enterprises does not make any representation or warranty regarding the suitability of the part described herein for any particular purpose, and Pasternack Enterprises does not assume liability arising out of the use of any part or document.

© 2025 Infinite Electronics, Inc. Pasternack is a registered trademark of Infinite Electronics, Inc.

PE51767 CAD Drawing

1.0/2.3 Male Right Angle Connector Crimp Attachment for LMR-195-FR, RG303, RG58, RG141, PE-C195, PE-P195, LMR-195, RG142, RG55, RG223

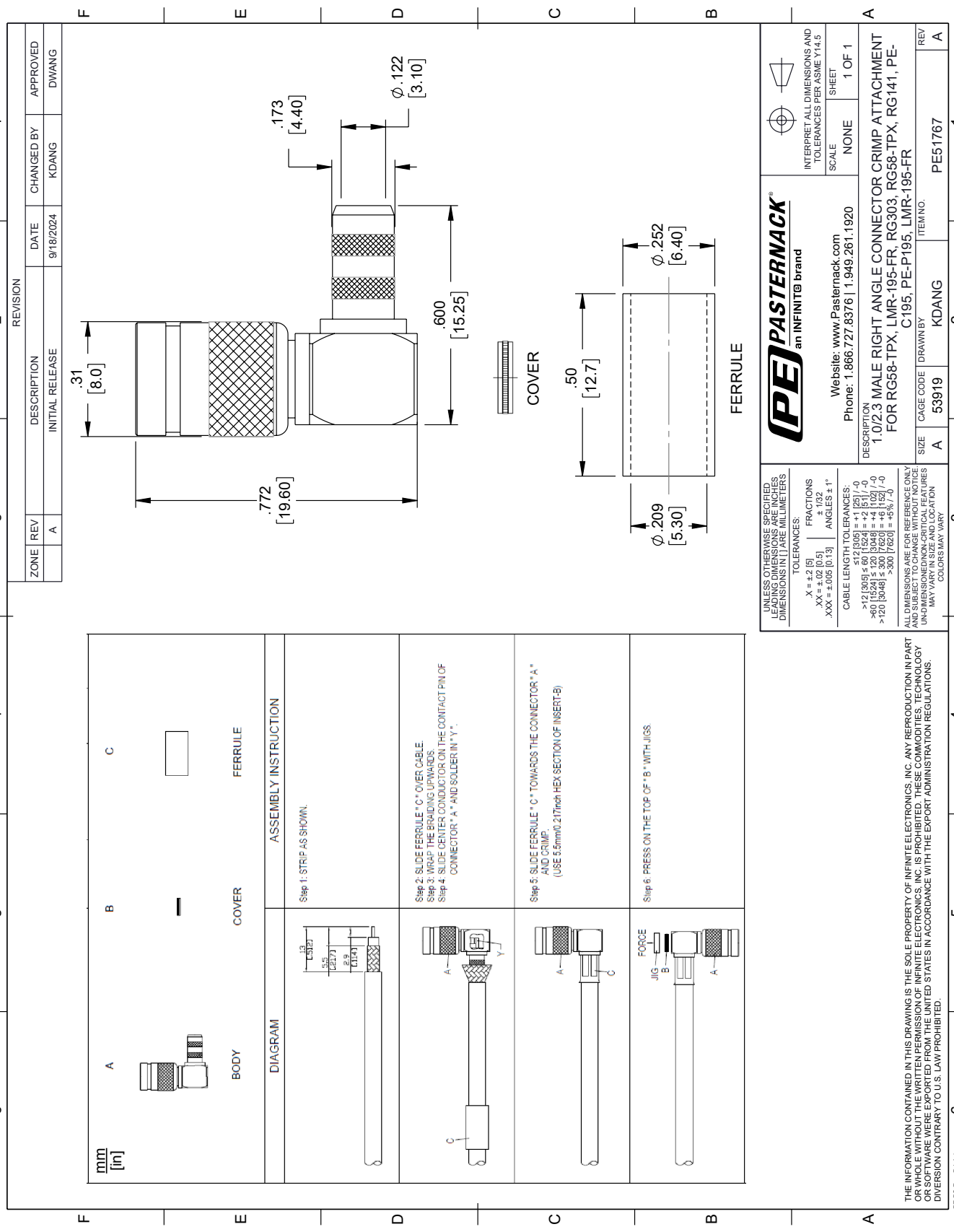

© 2025 Infinite Electronics, Inc. Pasternack is a registered trademark of Infinite Electronics, Inc.

PASTERNACK®
www.pasternack.com



1.0/2.3 Jack Right Angle Bulkhead Connector Crimp/ Solder Attachment For RG58, .236 inch DD Hole

TECHNICAL DATA SHEET PE44260

1.0/2.3 Jack Right Angle Bulkhead Connector Crimp/Solder Attachment For RG58, .236 inch DD Hole

Configuration

Connector	1.0/2.3 Jack
Connector Interface Type	RG58
Cable Attachment Method (Shield/Contact)	Crimp/Solder
Body Style	Right Angle
Mount Method	Bulkhead

Electrical Specifications

Impedance, Ohms	50

Mechanical Specifications

Size

Length, in [mm]	1.003 [25.48]
Width/Dia., in [mm]	0.315 [8.00]
Height, in [mm]	0.591 [15.01]
Weight, lbs [g]	0.013 [5.9]

Connector

Type	1.0/2.3 Jack
Contact Material and Plating	Beryllium Copper, Gold
Contact Plating Specification	30µ in. minimum
Body Material and Plating	Brass, Gold
Dielectric Type	Teflon

Compliance Certifications (visit www.Pasternack.com for current document)

RoHS Compliant	Yes

Plotted and Other Data

Notes:	Values at 25 °C, sea level

1.0/2.3 Jack Right Angle Bulkhead Connector Crimp/Solder Attachment For RG58, .236 inch DD Hole from Pasternack Enterprises has same day shipment for domestic and International orders. Our RF, microwave and fiber optic products maintain a 99% availability and are part of the broadest selection in the industry.

Click the following link (or enter part number in “SEARCH” on website) to obtain additional part information including price, inventory and certifications: 1.0/2.3 Jack Right Angle Bulkhead Connector Crimp/Solder Attachment For RG58, .236 inch DD Hole PE44260

URL: http://www.pasternack.com/1.0-2.3-jack-standard-rg58-connector-pe44260-p.aspx

The information contained in this document is accurate to the best of our knowledge and representative of the part described herein. It may be necessary to make modifications to the part and/or the documentation of the part, in order to implement improvements. Pasternack reserves the right to make such changes as required. Unless otherwise stated, all specifications are nominal.

Pasternack Enterprises, Inc. • P.O. Box 16759, Irvine, CA 92623
Phone: (866) 727-8376 or (949) 261-1920 • **Fax:** (949) 261-7451
Sales@Pasternack.com • Techsupport@Pasternack.com

© 2013 Pasternack Enterprises All Rights Reserved

PE44260 CAD Drawing

1.0/2.3 Jack Right Angle Bulkhead Connector Crimp/
Solder Attachment For RG58, .236 inch DD Hole

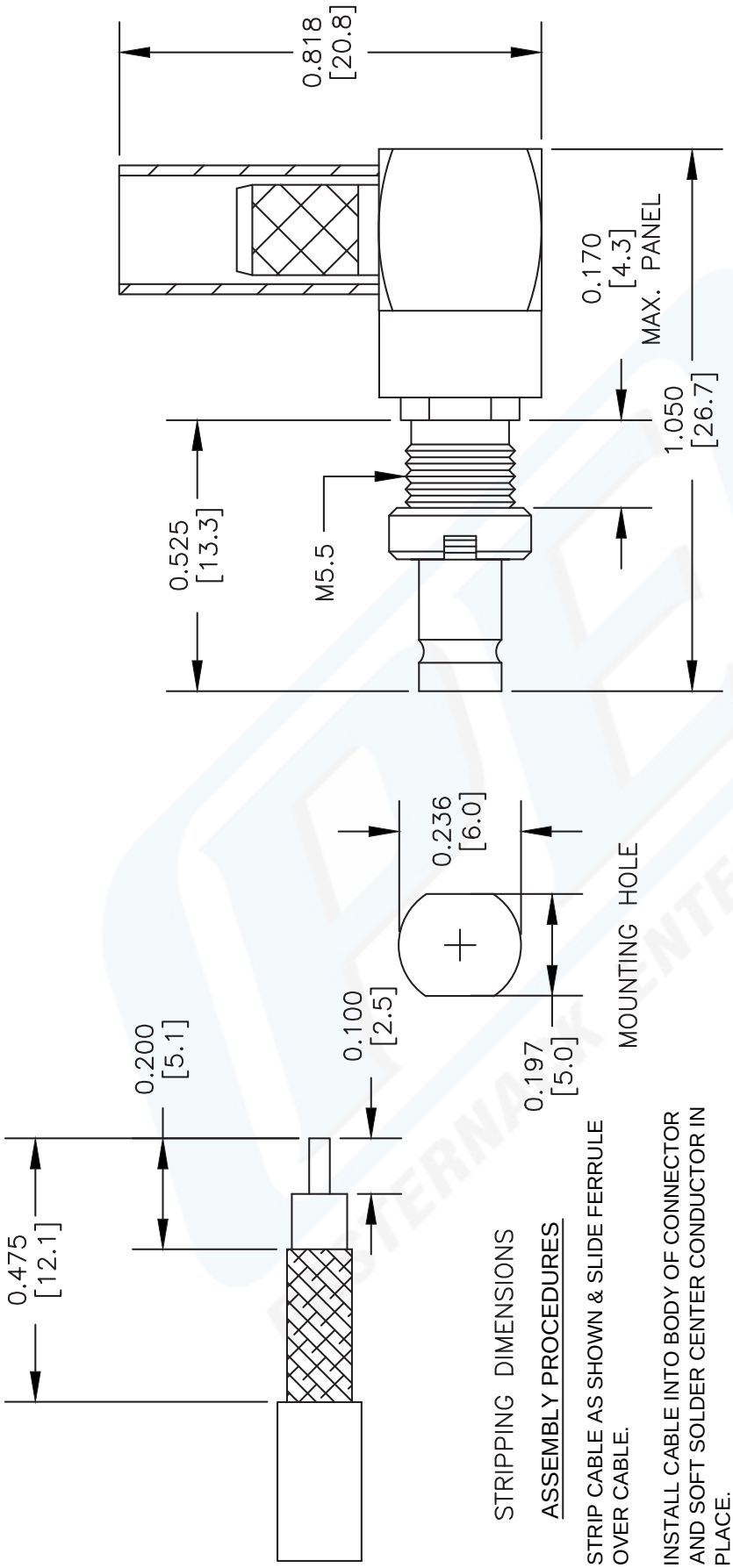

STRIPPING DIMENSIONS

ASSEMBLY PROCEDURES

1. STRIP CABLE AS SHOWN & SLIDE FERRULE OVER CABLE.
2. INSTALL CABLE INTO BODY OF CONNECTOR AND SOFT SOLDER CENTER CONDUCTOR IN PLACE.
3. CRIMP FERRULE & SCREW CAP DOWN.

CRIMP SIZE REQUIRED

FERRULE: .213" HEX CRIMP TOOL

NOTES:
1. UNLESS OTHERWISE SPECIFIED ALL DIMENSIONS ARE NOMINAL.
2. ALL SPECIFICATIONS ARE SUBJECT TO CHANGE WITHOUT NOTICE AT ANY TIME.
3. DIMENSIONS ARE IN INCHES [mm].
4. FITS MIL-C-17 AND EQUIVALENT CABLES.

DWG TITLE	CAD FILE	SCALE	SIZE	
PE44260	100103	N/A	A	127
FSCM NO. 53919				

PASTERNACK®
Pasternack Enterprises, Inc.
P.O. Box 16759 | Irvine | CA | 92623
Phone: (949) 261-1920 | **Fax:** (949) 261-7451
Website: www.pasternack.com | **E-Mail:** sales@pasternack.com

© 2013 Pasternack Enterprises All Rights Reserved

Low Loss Flexible LMR-195 Outdoor Rated Coax Cable Double Shielded with Black PE Jacket

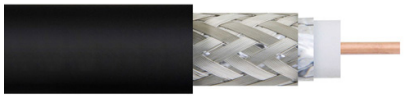

LMR-195

TIMES MICROWAVE SYSTEMS An Amphenol Company

Times Microwave Systems Connector Specification

Configuration

- Low Loss, Outdoor Flexible Cable
- 2 Shield(s)

Features

- Max Operating Frequency of 8 GHz
- Low Loss Cable
- Phase Velocity 80% VoP

Applications

- Laboratory Applications
- General Purpose RF Interconnect

Description

LMR-195 part number from Pasternack is a LMR-195 coax cable that is flexible. Pasternack LMR-195 flexible coax cable is 50 Ohm and has a PE (F) dielectric. Our LMR-195 coax is constructed with a 0.195 jacket made of PE. LMR-195 coax has a shield count of 2, a RF shielding of 90 dB and the maximum frequency for this Pasternack cable is 8 GHz. LMR-195 coax cable has an attenuation at 1 GHz of 11.8 dB.

Pasternack LMR-195 coax cables are part of over 40,000 RF, microwave and millimeter wave components. LMR-195 cables and our other RF parts are available for same day shipping worldwide. Custom RF cable assemblies using LMR-195 or other coax can be built and shipped same day as well.

Electrical Specifications

Description	Minimum	Typical	Maximum	Units
Frequency Range	DC		8	GHz
Cutoff Frequency		41		GHz
Impedance		50		Ohms
Velocity of Propagation		80		%
Time Delay		1.27 [4.17]		ns/ft [ns/m]
Shielding Effectiveness	90			dB
Dielectric Withstanding Voltage (DC)			1,000	Vdc
Jacket Spark			3,000	Vrms
Inner Conductor DC Resistance			7.6	Ohms/1000ft
Outer Conductor DC Resistance			4.9	Ohms/1000ft
Nominal Capacitance		25.4 [83.33]		pF/ft [pF/m]
Nominal Inductance		0.064 [0.21]		uH/ft [uH/m]
Input Power (Peak)			2.5	kWatts

© 2023 Infinite Electronics, Inc. Pasternack is a registered trademark of Infinite Electronics, Inc.
+1 (866) 558-2786 | sales@pasternack.com | pasternack.com

Low Loss Flexible LMR-195 Outdoor Rated Coax Cable Double Shielded with Black PE Jacket

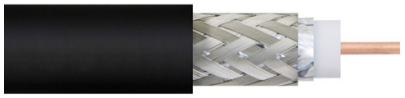

LMR-195

Performance by Frequency Band

Description	F1	F2	F3	F4	F5	Units
Frequency	50	150	220	450	900	MHz
Attenuation, Typ	2.5	4.4	5.4	7.8	11.1	dB/100ft
	8.2	14.44	17.72	25.59	36.42	dB/100m
Input Power (CW), Max	680	390	320	220	160	Watts

Description	F6	F7	F8	F9	F10	Units
Frequency	1.5	1.8	2	2.5	8	GHz
Attenuation, Typ	14.5	16	16.9	19	29.9	dB/100ft
	47.57	52.49	55.45	62.34	98.1	dB/100m
Input Power (CW), Max	120	110	100	90	60	Watts

Mechanical Specifications

Diameter	0.195 in [4.95 mm}
Weight	0.022 lbs/ft [0.03 kg/m]
Min. Bend Radius (Installation)	0.5 in [12.7 mm]
Min. Bend Radius (Repeated)	2 in [50.8 mm]
Bending Moment	0.2 lbs-ft [0.27 N-m]
Tensile Strength	40 lbs [18.14 kg]
Flat Plate Crush	15 lbs/in [0.27 kg/mm]

Construction Specifications

Description	Material and Plating	Diameter
Inner Conductor	Copper, 1 Strand	0.037 in [0.94 mm]
Conductor Type	Solid	
Dielectric	PE (F)	0.11 in [2.79 mm]
First Shield	Aluminum Tape	
Second Shield	Tinned Copper Braid	
Jacket	PE, Black	0.195 in [4.95 mm]

Environmental Specifications

Temperature

Operating Range	-40 to +85 deg C
Storage Range	-70 to +85 deg C

Compliance Certifications (see product page for current document)

Plotted and Other Data

Notes:

© 2023 Infinite Electronics, Inc. Pasternack is a registered trademark of Infinite Electronics, Inc.

Low Loss Flexible LMR-195 Outdoor Rated Coax Cable Double Shielded with Black PE Jacket

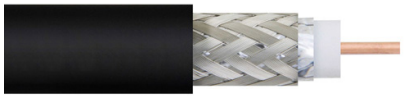

LMR-195

Low Loss Flexible LMR-195 Outdoor Rated Coax Cable Double Shielded with Black PE Jacket from Pasternack Enterprises has same day shipment for domestic and International orders. Our RF, microwave and millimeter wave products maintain a 99.4% availability and are part of the broadest selection in the industry.

Click the following link (or enter part number in "SEARCH" on website) to obtain additional part information including price, inventory and certifications: Low Loss Flexible LMR-195 Outdoor Rated Coax Cable Double Shielded with Black PE Jacket LMR-195

URL: https://www.pasternack.com/50-ohm-low-loss-flexible-lmr195-pe-jacket-double-shielded-black-lmr-195-p.aspx

The information contained within this document is accurate to the best of our knowledge and representative of the part described herein. It may be necessary to make modifications to the part and/or the documentation of the part in order to impliment improvements. Pasternack Enterprises reserves the right to make such changes as required. Unless otherwise stated, all specifications are nominal. Pasternack Enterprises does not make any representation or warranty regarding the suitability of the part described herein for any particular purpose, and Pasternack Enterprises does not assume liability arising out of the use of any part or document.

© 2023 Infinite Electronics, Inc. Pasternack is a registered trademark of Infinite Electronics, Inc.

LMR-195 CAD Drawing

Low Loss Flexible LMR-195 Outdoor Rated Coax Cable Double Shielded with Black PE Jacket

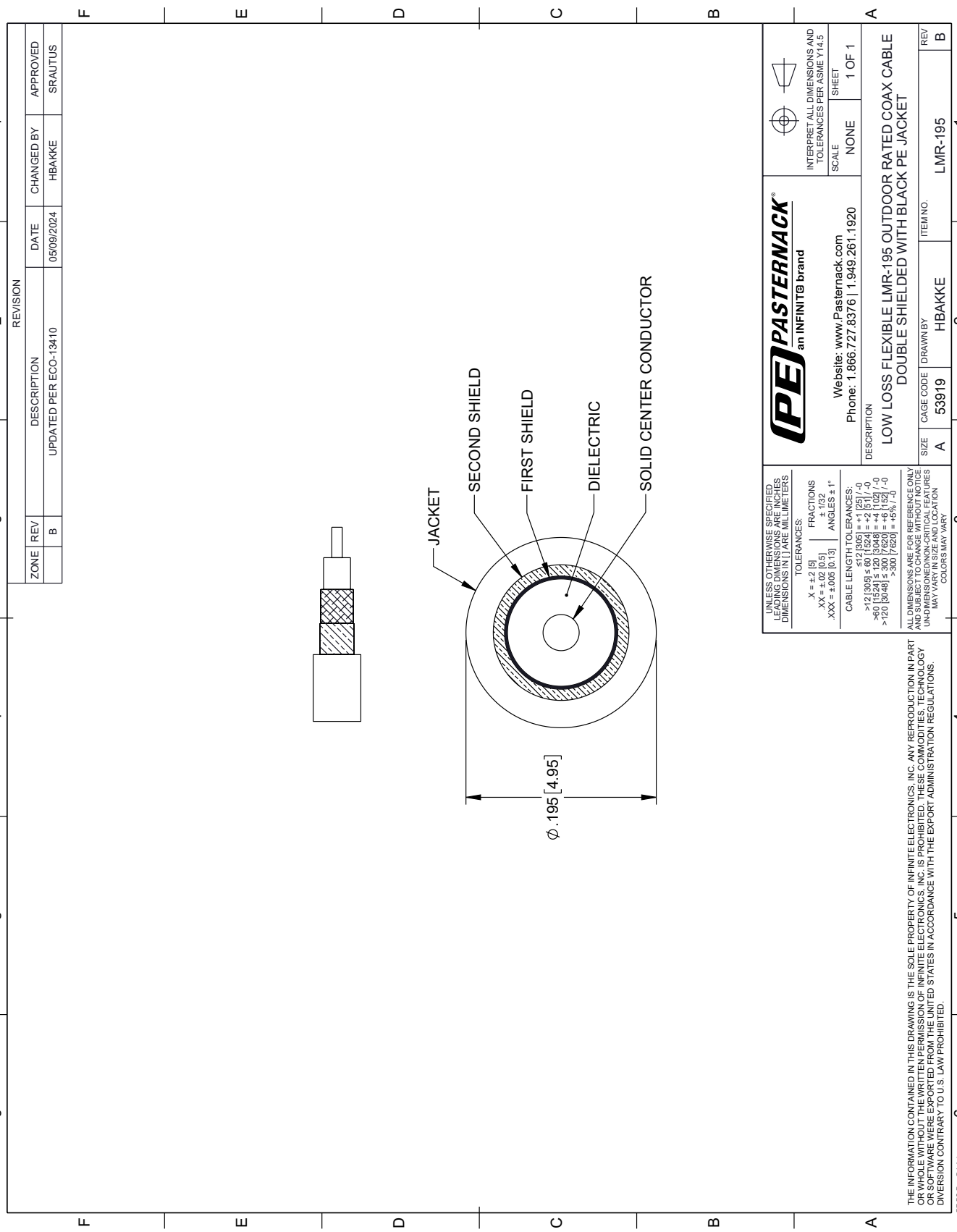

© 2023 Infinite Electronics, Inc. Pasternack is a registered trademark of Infinite Electronics, Inc.