PASTERNACK
an INFINITE brand

3.5mm Female Connector Clamp/Solder Attachment for PE-SR402AL, PE-SR402FL, PE-SR402FLJ, PE-SR402TN, RG402

RF Connectors
Technical Data Sheet

PE45011

Configuration

- 3.5mm Female Connector
- 50 Ohms
- Straight Body Geometry
- Connector Interface Types: PE-SR402AL, PE-SR-402FL, PE-SR402FLJ, PE-SR402TN, RG402

Features

- Max. Operating Frequency 34 GHz
- Excellent VSWR of 1.2:1
- Gold over Nickel Plated Beryllium Copper Contact
- 50 µin minimum contact plating

Applications

- General Purpose Test
- Custom Cable Assemblies

Description

Pasternack's PE45011 3.5mm female connector with clamp/solder attachment for PE-SR402AL, PE-SR402FL, PE-SR402FLJ, PE-SR402TN and RG402 is part of our full line of RF components available for same-day shipping. Our 3.5mm female connector operates up to a maximum frequency of 34 GHz and offers excellent VSWR of 1.2:1.

Our 3.5mm female connector PE45011 datasheet specifications and drawing with dimensions are shown below in this PDF. Pasternack's broad catalog of RF, microwave and millimeter wave connectors allows designers to configure and customize their signal connections however they like. Whether the need is to provide an I/O for a board design, or simply create a custom cable assembly configuration, Pasternack has the right connector for the job. Pasternack can also expertly build your custom cable assemblies for you and ship same-day.

Electrical Specifications

Description	Minimum	Typical	Maximum	Units
Frequency Range	DC		34	GHz
VSWR			1.2:1	

Mechanical Specifications

Size

Length	0.862 in [21.89 mm]
Width/Dia.	0.351 in [8.92 mm]
Weight	0.012 lbs [5.44 g]

Click the following link (or enter part number in "SEARCH" on website) to obtain additional part information including price, inventory and certifications: 3.5mm Female Connector Clamp/Solder Attachment for PE-SR402AL, PE-SR402FL, PE-SR402FLJ, PE-SR402TN, RG402 PE45011

Pasternack Enterprises, Inc. • P.O. Box 16759, Irvine, CA 92623
Phone: (866) 727-8376 or (949) 261-1920 • **Fax:** (949) 261-7451
Sales@Pasternack.com • Techsupport@Pasternack.com

© 2020 Pasternack Enterprises All Rights Reserved

3.5mm Female Connector Clamp/Solder Attachment for PE-SR402AL, PE-SR402FL, PE-SR402FLJ, PE-SR402TN, RG402

Material Specifications

Description	Material	Plating
Contact	Beryllium Copper	Gold over Nickel 50 µin minimum
Insulation	PCTFE	
Body	Passivated Stainless Steel	SAE-AMS-2700

Environmental Specifications

Compliance Certifications (see product page for current document)

Plotted and Other Data

Notes:

3.5mm Female Connector Clamp/Solder Attachment for PE-SR402AL, PE-SR402FL, PE-SR402FLJ, PE-SR402TN, RG402 from Pasternack Enterprises has same day shipment for domestic and International orders. Our RF, microwave and millimeter wave products maintain a 99.4% availability and are part of the broadest selection in the industry.

Click the following link (or enter part number in “SEARCH” on website) to obtain additional part information including price, inventory and certifications: 3.5mm Female Connector Clamp/Solder Attachment for PE-SR402AL, PE-SR402FL, PE-SR402FLJ, PE-SR402TN, RG402 PE45011

URL: https://www.pasternack.com/3.5mm-female-pe-sr402al-pe-sr402fl-pe-sr402tn-rg402-connector-pe45011-p.aspx

The information contained in this document is accurate to the best of our knowledge and representative of the part described herein. It may be necessary to make modifications to the part and/or the documentation of the part, in order to implement improvements. Pasternack reserves the right to make such changes as required. Unless otherwise stated, all specifications are nominal. Pasternack does not make any representation or warranty regarding the suitability of the part described herein for any particular purpose, and Pasternack does not assume any liability arising out of the use of any part or documentation.

Pasternack Enterprises, Inc. • P.O. Box 16759, Irvine, CA 92623
Phone: (866) 727-8376 or (949) 261-1920 • **Fax:** (949) 261-7451
Sales@Pasternack.com • Techsupport@Pasternack.com

© 2020 Pasternack Enterprises All Rights Reserved

PE45011 CAD Drawing

3.5mm Female Connector Clamp/Solder Attachment for PE-SR402AL, PE-SR402FL, PE-SR402FLJ, PE-SR402TN, RG402

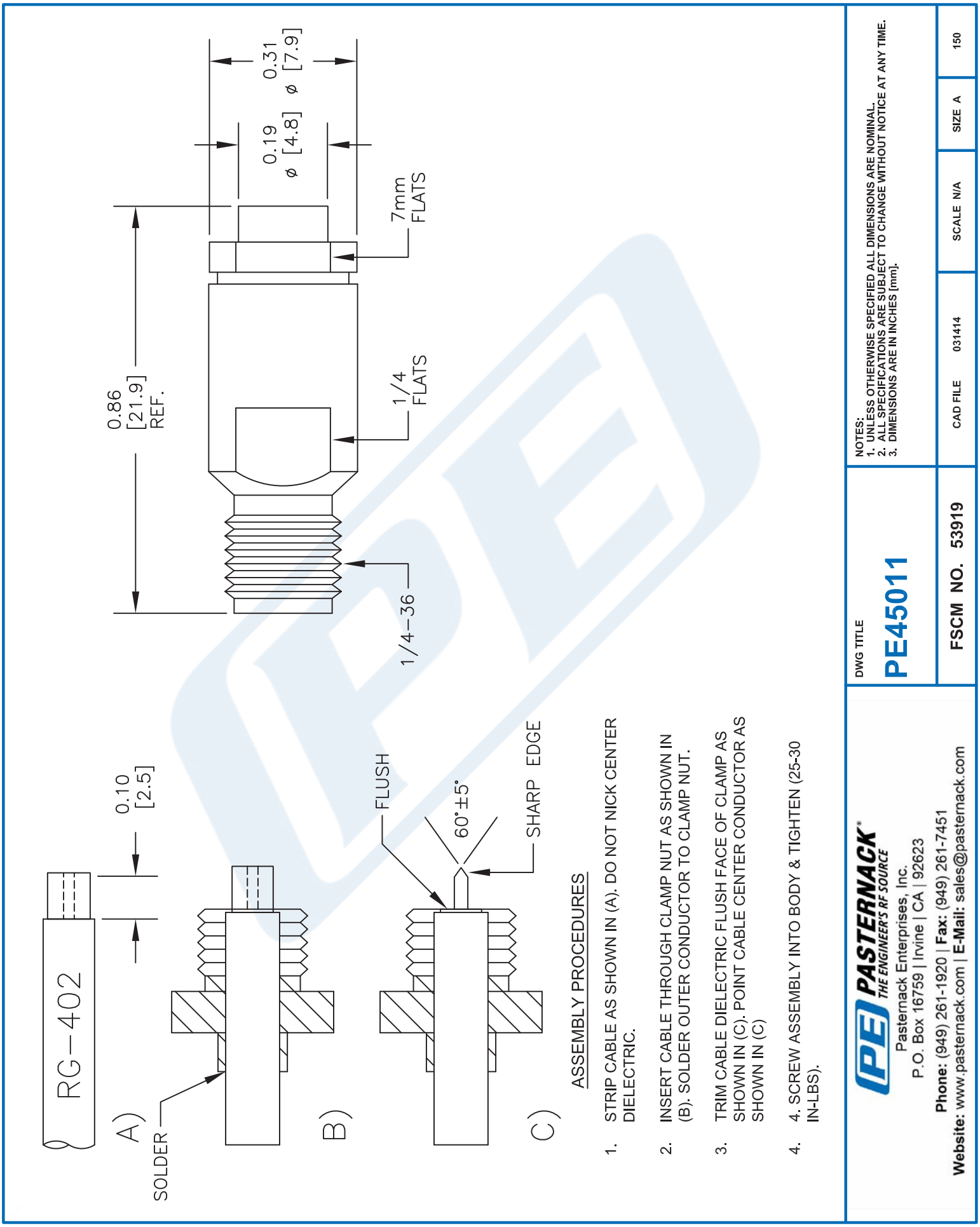

© 2020 Pasternack Enterprises All Rights Reserved

MATERIALS	
BODY	BRASS NICKEL PLATED
CONTACT	GOLD PLATED
INSULATOR	PTFE
SOLDER ADAPTER	BRASS GOLD PLATED

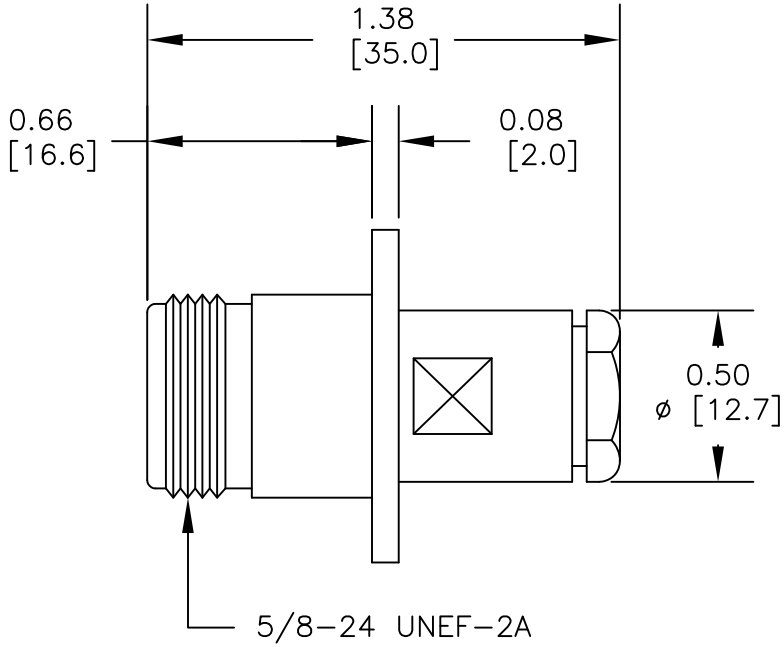

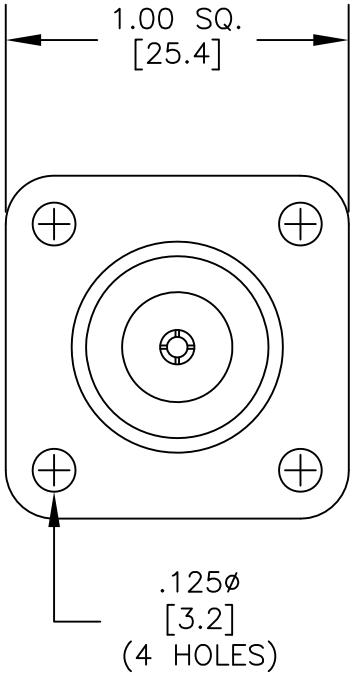

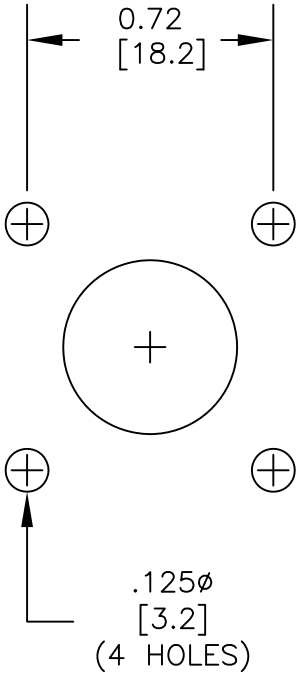

MOUNTING HOLE

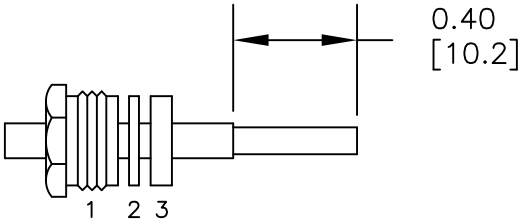

ASSEMBLY (A)

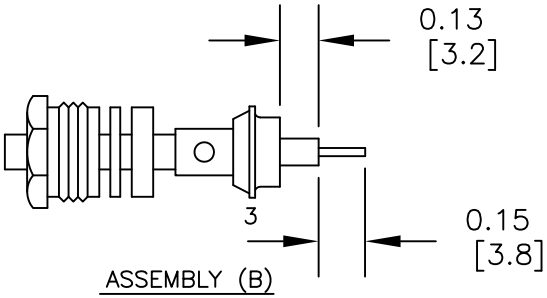

ASSEMBLY (B)

ASSEMBLY PROCEDURES

1. SLIDE CLAMP NUT (1) WASHER (2) & GASKET (3) OVER CABLE. STRIP CABLE AS SHOWN IN ASSEMBLY (A). DO NOT CUT DIELECTRIC.
2. SLIDE ADAPTER (4) OVER CABLE UNTIL ADAPTER (4) BOTTOMS ON OUTER CONDUCTOR. SOLDER ADAPTER (4) TO OUTER CONDUCTOR USING MINIMUM HEAT.
3. STRIP CABLE AS SHOWN IN ASSEMBLY (B). SOLDER CONTACT TO CENTER CONDUCTOR. SLIDE ASSEMBLY FORWARD & TIGHTEN TO BODY.

PASTERNACK ENTERPRISES®
ESTABLISHED 1972

PASTERNACK ENTERPRISES, INC.
P.O BOX 16759, IRVINE, CA 92623
PHONE (949) 261-1920 FAX (949) 261-7451
WEB ADDRESS: www.pasternack.com
E-MAIL ADDRESS: sales@pasternack.com
COAXIAL & FIBER OPTICS

DWG TITLE **PE44072**

DES. N FEMALE, PANEL MOUNT, SOLDER/CLAMP ATTACHMENT FOR RG402, PE-SR402AL & PE-SR402FL

REV. A	FSCM NO. 53919	CAD FILE 121411	SCALE N/A	SIZE A	2233

NOTES:
1. UNLESS OTHERWISE SPECIFIED ALL DIMENSIONS ARE NOMINAL.
2. ALL SPECIFICATIONS ARE SUBJECT TO CHANGE WITHOUT NOTICE AT ANY TIME.
3. DIMENSIONS ARE IN INCHES [mm].

PASTERNACK
an INFINITE brand

Low Loss .141 Semi-Rigid Coax Cable, Copper Outer Conductor, Microporous PTFE 76.5 pct VoP Dielectric, Straight Sections

RF Cables
Technical Data Sheet

PECX007

Configuration

- Low Loss Semi-Rigid Cable
- 1 Shield(s)

Features

- Continuous Copper Outer Conductor
- Low Density Microporous Dielectric
- Phase Stability vs. Temperature
- Mechanical Stability vs. Temperature
- High Isolation
- Supplied in 5 foot maximum straight lengths

Applications

- Low Loss Cabling
- Phase Matched Microporous Cables
- High Isolation Interconnects
- Surface Mount Cabling
- Semi-Rigid Cable Assemblies

Description

Pasternack's PECX007 low loss semi-rigid coax with copper outer conductor and microporous dielectric is part of our full line of RF components available for same-day shipping. This low loss semi-rigid coaxial cable operates to a maximum frequency range of 34 GHz. The outer conductor is served by a continuous copper tube which provides extremely high levels of RF shielding and low attenuation. The low density microporous dielectric of this semi rigid coax reduces the dielectric losses and also provides more phase stability over temperature when compared to solid PTFE dielectric. An additional benefit of the microporous dielectric is its mechanical stability over temperature. Unlike solid PTFE, this low density PTFE material can handle soldering heat with minimal or no measurable extrusion on the ends of the cable. This minimizes stress on connectors and allows for more predictable termination on PCB, surface mount applications.

Our microporous dielectric low loss semi-rigid coax cable, PECX007 datasheet specifications and drawing with dimensions are shown below in this PDF. Pasternack's broad catalog of RF, microwave and millimeter wave interconnects allows designers to configure and customize their signal connections however they like. Whether the need is to provide a high isolation, phase stable signal path or simply create a custom cable assembly configuration, Pasternack has the right cable for the job. Pasternack can also expertly build your custom cable assemblies for you and ship same-day.

Electrical Specifications

Description	Minimum	Typical	Maximum	Units
Frequency Range	DC		34	GHz
Impedance		50		Ohms
Velocity of Propagation		76.5		%

Click the following link (or enter part number in "SEARCH" on website) to obtain additional part information including price, inventory and certifications: Low Loss .141 Semi-Rigid Coax Cable, Copper Outer Conductor, Microporous PTFE 76.5 pct VoP Dielectric, Straight Sections PECX007

Pasternack Enterprises, Inc. • P.O. Box 16759, Irvine, CA 92623
Phone: (866) 727-8376 or (949) 261-1920 • **Fax:** (949) 261-7451
Sales@Pasternack.com • Techsupport@Pasternack.com

© 2020 Pasternack Enterprises All Rights Reserved

Low Loss .141 Semi-Rigid Coax Cable, Copper Outer Conductor, Microporous PTFE 76.5 pct VoP Dielectric, Straight Sections

Performance by Frequency Band

Description	F1	F2	F3	F4	F5	Units
Frequency	0.5	1	5	10	18	GHz
Attenuation, Typ	7.5	10.5	24	34	46	dB/100ft
	24.61	34.45	78.74	111.55	150.92	dB/100m
Input Power (CW), Max	820	580	240	170	130	Watts

Description	F6	F7	F8	F9	F10	Units
Frequency	20					GHz
Attenuation, Typ	52					dB/100ft
	170.6					dB/100m
Input Power (CW), Max	115					Watts

Mechanical Specifications

Min. Bend Radius (Installation) 0.5 in [12.7 mm]

Construction Specifications

Description	Material and Plating	Diameter
Inner Conductor	Copper, Silver, 1 Strand ASTM B-298	0.04 in 1.02 mm
Conductor Type	Solid	
Dielectric	Microporous PTFE	0.118 in [3 mm]
Outer Conductor	Copper	0.141 in 3.58 mm

Environmental Specifications

Temperature

Operating Range -65 to +200 deg C

Click the following link (or enter part number in “SEARCH” on website) to obtain additional part information including price, inventory and certifications: Low Loss .141 Semi-Rigid Coax Cable, Copper Outer Conductor, Microporous PTFE 76.5 pct VoP Dielectric, Straight Sections PECX007

Pasternack Enterprises, Inc. • P.O. Box 16759, Irvine, CA 92623
Phone: (866) 727-8376 or (949) 261-1920 • **Fax:** (949) 261-7451
Sales@Pasternack.com • Techsupport@Pasternack.com

© 2020 Pasternack Enterprises All Rights Reserved

Low Loss .141 Semi-Rigid Coax Cable, Copper Outer Conductor, Microporous PTFE 76.5 pct VoP Dielectric, Straight Sections

Compliance Certifications (see product page for current document)

Plotted and Other Data

Notes:

Low Loss .141 Semi-Rigid Coax Cable, Copper Outer Conductor, Microporous PTFE 76.5 pct VoP Dielectric, Straight Sections from Pasternack Enterprises has same day shipment for domestic and International orders. Our RF, microwave and millimeter wave products maintain a 99.4% availability and are part of the broadest selection in the industry.

Click the following link (or enter part number in “SEARCH” on website) to obtain additional part information including price, inventory and certifications: Low Loss .141 Semi-Rigid Coax Cable, Copper Outer Conductor, Microporous PTFE 76.5 pct VoP Dielectric, Straight Sections PECX007

URL: https://www.pasternack.com/low-loss-semirigid-141-coax-cable-copper-straight-pecx007-p.aspx

The information contained in this document is accurate to the best of our knowledge and representative of the part described herein. It may be necessary to make modifications to the part and/or the documentation of the part, in order to implement improvements. Pasternack reserves the right to make such changes as required. Unless otherwise stated, all specifications are nominal. Pasternack does not make any representation or warranty regarding the suitability of the part described herein for any particular purpose, and Pasternack does not assume any liability arising out of the use of any part or documentation.

Pasternack Enterprises, Inc. • P.O. Box 16759, Irvine, CA 92623
Phone: (866) 727-8376 or (949) 261-1920 • **Fax:** (949) 261-7451
Sales@Pasternack.com • Techsupport@Pasternack.com

© 2020 Pasternack Enterprises All Rights Reserved

PECX007 CAD Drawing

Low Loss .141 Semi-Rigid Coax Cable, Copper Outer Conductor,
Microporous PTFE 76.5 pct VoP Dielectric, Straight Sections

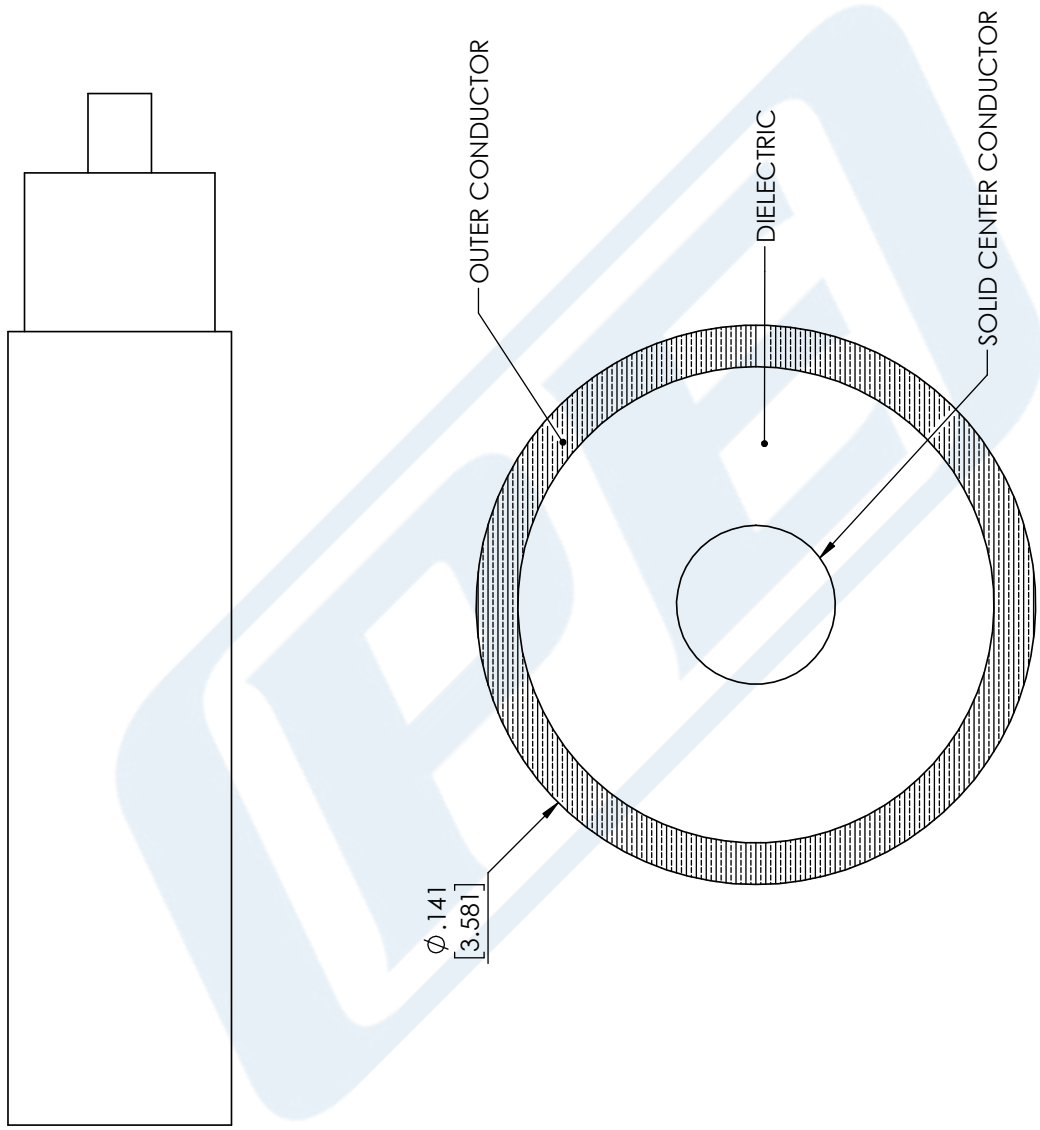

STANDARD TOLERANCES	
.X	±0.2
.XX	±0.01
.XXX	±0.005

*STANDARD TOLERANCES APPLY ONLY TO DIMENSIONS IN INCHES

NOTES:
1. UNLESS OTHERWISE SPECIFIED ALL DIMENSIONS ARE NOMINAL.
2. ALL SPECIFICATIONS ARE SUBJECT TO CHANGE WITHOUT NOTICE AT ANY TIME.
3. DIMENSIONS ARE IN INCHES [mm].

DWG TITLE PECX007

CAD FILE 06/14/18 | SCALE N/A | SIZE A | CN2245

CAGE CODE 53919

PASTERNACK® THE ENGINEER'S RF SOURCE
Pasternack Enterprises, Inc.
P.O. Box 16759 | Irvine | CA | 92623
Phone: (949) 261-1920 | **Fax:** (949) 261-7451
Website: www.pasternack.com | **E-Mail:** sales@pasternack.com

© 2020 Pasternack Enterprises All Rights Reserved