PASTERNACK
an INFINITE brand

SMP Female Right Angle Connector Solder Attachment for PE-SR405AL, PE-SR405FL, PE-SR405FLJ, PE-SR405TN, RG405

RF Connectors
Technical Data Sheet

PE44275

Configuration

- SMP Female Connector
- MIL-STD-348A
- 50 Ohms
- Right Angle Body Geometry
- Connector Interface Types: PE-SR405AL, PE-SR405FL, PE-SR405FLJ, PE-SR405TN, RG405

Features

- Max. Operating Frequency 12.4 GHz
- Good VSWR of 1.38:1
- Gold Plated Beryllium Copper Contact
- Blind Mate Connector

Applications

- General Purpose Test
- Custom Cable Assemblies

Description

Pasternack's PE44275 Right Angle, SMP, Standard, Connector is part of our full line of RF components available for same-day shipping. Our SMP female connector operates up to a maximum frequency of 12.4 GHz and offers good VSWR of 1.38:1. The Pasternack blind mate connector is ideal for applications where direct visual or tactile access to the connection point is not possible, for example, when two circuit boards need to be mated. Its right angle body geometry allows for easier connections in tight spaces.

Our SMP female right angle connector PE44275 datasheet specifications and drawing with dimensions are shown below in this PDF. Pasternack's broad catalog of RF, microwave and millimeter wave connectors allows designers to configure and customize their signal connections however they like. Whether the need is to provide an I/O for a board design, or simply create a custom cable assembly configuration, Pasternack has the right connector for the job. Pasternack can also expertly build your custom cable assemblies for you and ship same-day.

Electrical Specifications

Description	Minimum	Typical	Maximum	Units
Frequency Range	DC		12.4	GHz
VSWR			1.38:1	
Operating Voltage (AC)			335	Vrms
Impedance		50		Ohms
Test Voltage (AC)			500	Vrms
Inner Conductor DC Resistance			6	mOhms
Outer Conductor DC Resistance			2	mOhms
Insulation Resistance	5,000			MOhms

Click the following link (or enter part number in "SEARCH" on website) to obtain additional part information including price, inventory and certifications: SMP Female Right Angle Connector Solder Attachment for PE-SR405AL, PE-SR405FL, PE-SR405FLJ, PE-SR405TN, RG405 PE44275

Pasternack Enterprises, Inc. • P.O. Box 16759, Irvine, CA 92623
Phone: (866) 727-8376 or (949) 261-1920 • **Fax:** (949) 261-7451
Sales@Pasternack.com • Techsupport@Pasternack.com

© 2020 Pasternack Enterprises All Rights Reserved

SMP Female Right Angle Connector Solder Attachment for PE-SR405AL, PE-SR405FL, PE-SR405FLJ, PE-SR405TN, RG405

RF Connectors
Technical Data Sheet

PE44275

Performance by Frequency

Description	F1	F2	F3	F4	F5	Units
Frequency Range	DC to 6	6 to 12	12 to 26.5			GHz
VSWR, Max	1.11:1	1.23:1	1.38:1			

Electrical Specification Notes:
Insertion loss = 0.1 x sqrt(fGHz) dB max.

Mechanical Specifications

Size

Length	0.26 in [6.60 mm]
Width	0.19 in [4.83 mm]
Height	0.00 in [0.00 mm]
Weight	0.00 lbs [0.91 g]

Material Specifications

Description	Material	Plating
Contact	Beryllium Copper	Gold
Insulation	PTFE	
Body	Beryllium Copper	Gold

Mechanical Specification Notes:
Mating cycles: 1,000 (smooth bore), 500 (limited detent), 100 (full detent) minimum.

Environmental Specifications

Temperature

Operating Range	-65 to +155 deg C
Humidity	MIL-STD-202, Method 106
Shock	MIL-STD-202, Method 213, Condition A
Vibration	MIL-STD-202, Method 204, Condition B
Thermal Shock	MIL-STD-202, Method 107, Condition B

Compliance Certifications (see product page for current document)

Plotted and Other Data

Notes:

Click the following link (or enter part number in “SEARCH” on website) to obtain additional part information including price, inventory and certifications: SMP Female Right Angle Connector Solder Attachment for PE-SR405AL, PE-SR405FL, PE-SR405FLJ, PE-SR405TN, RG405 PE44275

Pasternack Enterprises, Inc. • P.O. Box 16759, Irvine, CA 92623
Phone: (866) 727-8376 or (949) 261-1920 • **Fax:** (949) 261-7451
Sales@Pasternack.com • Techsupport@Pasternack.com

© 2020 Pasternack Enterprises All Rights Reserved

SMP Female Right Angle Connector Solder Attachment for PE-SR405AL, PE-SR405FL, PE-SR405FLJ, PE-SR405TN, RG405

RF Connectors
Technical Data Sheet

PE44275

SMP Female Right Angle Connector Solder Attachment for PE-SR405AL, PE-SR405FL, PE-SR405FLJ, PE-SR405TN, RG405 from Pasternack Enterprises has same day shipment for domestic and International orders. Our RF, microwave and millimeter wave products maintain a 99.4% availability and are part of the broadest selection in the industry.

Click the following link (or enter part number in “SEARCH” on website) to obtain additional part information including price, inventory and certifications: SMP Female Right Angle Connector Solder Attachment for PE-SR405AL, PE-SR405FL, PE-SR405FLJ, PE-SR405TN, RG405 PE44275

URL: https://www.pasternack.com/smp-female-standard-pe-sr405al-pe-sr405fl-rg405-connector-pe44275-p.aspx

The information contained in this document is accurate to the best of our knowledge and representative of the part described herein. It may be necessary to make modifications to the part and/or the documentation of the part, in order to implement improvements. Pasternack reserves the right to make such changes as required. Unless otherwise stated, all specifications are nominal. Pasternack does not make any representation or warranty regarding the suitability of the part described herein for any particular purpose, and Pasternack does not assume any liability arising out of the use of any part or documentation.

Pasternack Enterprises, Inc. • P.O. Box 16759, Irvine, CA 92623
Phone: (866) 727-8376 or (949) 261-1920 • **Fax:** (949) 261-7451
Sales@Pasternack.com • Techsupport@Pasternack.com

© 2020 Pasternack Enterprises All Rights Reserved

PE44275 CAD Drawing

SMP Female Right Angle Connector Solder Attachment for PE-SR405AL, PE-SR405FL, PE-SR405FLJ, PE-SR405TN, RG405

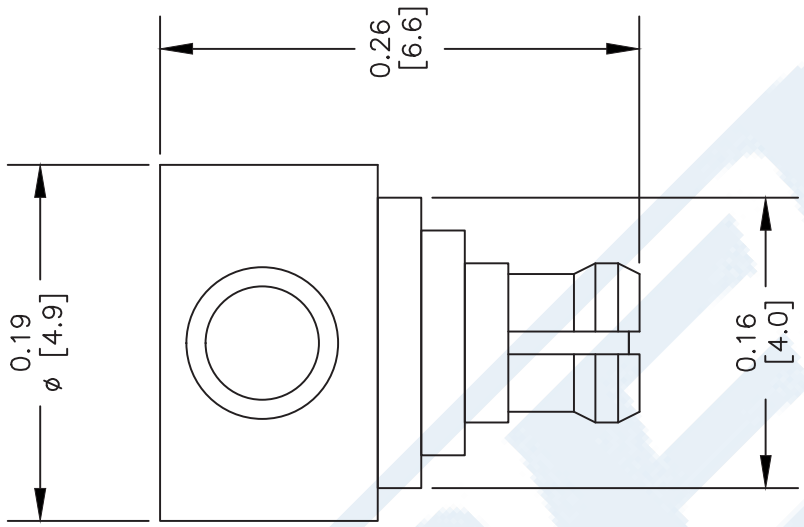

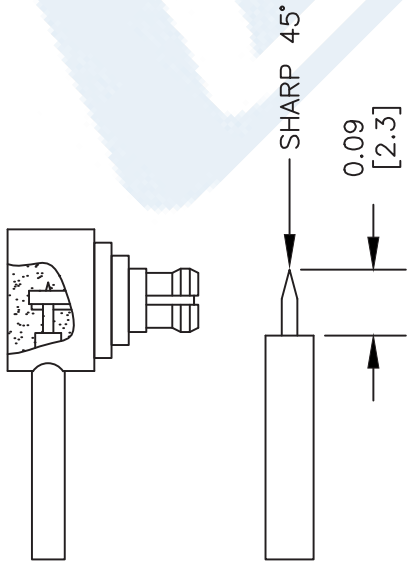

STRIPPING DIMENSIONS

ASSEMBLY PROCEDURES

1. STRIP CABLE AS SHOWN & SHARP CENTER CONDUCTOR.
2. INSERT CABLE INTO BODY UNTIL IT SITS IN PLACE. SOLDER CENTER CONDUCTOR IN PLACE.
3. SOLDER OUTER CONDUCTOR TO BODY. PRESS DOWN CAP.

NOTES:
1. UNLESS OTHERWISE SPECIFIED ALL DIMENSIONS ARE NOMINAL.
2. ALL SPECIFICATIONS ARE SUBJECT TO CHANGE WITHOUT NOTICE AT ANY TIME.
3. DIMENSIONS ARE IN INCHES [mm].
4. FITS MIL-C-17 AND EQUIVALENT CABLES.

DWG TITLE **PE44275**

REV. A	FSCM NO. 53919	CAD FILE 022912	SCALE N/A	SIZE A	2233

PASTERNACK®
Pasternack Enterprises, Inc.
P.O. Box 16759 | Irvine | CA | 92623
Phone: (949) 261-1920 | **Fax:** (949) 261-7451
Website: www.pasternack.com | **E-Mail:** sales@pasternack.com

© 2020 Pasternack Enterprises All Rights Reserved

PASTERNACK
an INFINITE brand

MMCX Plug Right Angle Connector Solder Attachment for PE-SR405AL, PE-SR405FL, PE-SR405FLJ, PE-SR405TN, RG405

RF Connectors
Technical Data Sheet

PE44699

Configuration

- MMCX Plug Connector
- 50 Ohms
- Right Angle Body Geometry
- Connector Interface Types: PE-SR405AL, PE-SR-405FL, PE-SR405FLJ, PE-SR405TN, RG405

Features

- Max. Operating Frequency 6 GHz
- Gold over Nickel Plated Phosphor Bronze Contact

Applications

- General Purpose Test
- Custom Cable Assemblies

Description

Pasternack's PE44699 MMCX plug right angle connector with solder/solder attachment for PE-SR405AL, PE-SR405FL, PE-SR405FLJ, PE-SR405TN and RG405 is part of our full line of RF components available for same-day shipping. Our MMCX plug connector operates up to a maximum frequency of 6 GHz. Its right angle body geometry allows for easier connections in tight spaces.

Our MMCX plug right angle connector PE44699 datasheet specifications and drawing with dimensions are shown below in this PDF. Pasternack's broad catalog of RF, microwave and millimeter wave connectors allows designers to configure and customize their signal connections however they like. Whether the need is to provide an I/O for a board design, or simply create a custom cable assembly configuration, Pasternack has the right connector for the job. Pasternack can also expertly build your custom cable assemblies for you and ship same-day.

Electrical Specifications

Description	Minimum	Typical	Maximum	Units
Frequency Range	DC		6	GHz
VSWR		1.2:1		

Mechanical Specifications

Size	
Length	0.315 in [8 mm]
Width/Dia.	0.157 in [3.99 mm]
Height	0.315 in [8 mm]
Weight	0.004 lbs [1.81 g]

Click the following link (or enter part number in "SEARCH" on website) to obtain additional part information including price, inventory and certifications: MMCX Plug Right Angle Connector Solder Attachment for PE-SR405AL, PE-SR405FL, PE-SR405FLJ, PE-SR405TN, RG405 PE44699

Pasternack Enterprises, Inc. • P.O. Box 16759, Irvine, CA 92623
Phone: (866) 727-8376 or (949) 261-1920 • **Fax:** (949) 261-7451
Sales@Pasternack.com • Techsupport@Pasternack.com

© 2020 Pasternack Enterprises All Rights Reserved

MMCX Plug Right Angle Connector Solder Attachment for PE-SR405AL, PE-SR405FL, PE-SR405FLJ, PE-SR405TN, RG405

Material Specifications

Description	Material	Plating
Contact	Phosphor Bronze	Gold over Nickel
Insulation	PTFE	
Body	Brass	Gold over Nickel

Environmental Specifications

Compliance Certifications (see product page for current document)

Plotted and Other Data

Notes:

MMCX Plug Right Angle Connector Solder Attachment for PE-SR405AL, PE-SR405FL, PE-SR405FLJ, PE-SR405TN, RG405 from Pasternack Enterprises has same day shipment for domestic and International orders. Our RF, microwave and millimeter wave products maintain a 99.4% availability and are part of the broadest selection in the industry.

Click the following link (or enter part number in “SEARCH” on website) to obtain additional part information including price, inventory and certifications: MMCX Plug Right Angle Connector Solder Attachment for PE-SR405AL, PE-SR405FL, PE-SR405FLJ, PE-SR405TN, RG405 PE44699

URL: https://www.pasternack.com/mmcx-plug-standard-pe-sr405al-pe-sr405fl-pe-sr405flj-rg405-connector-pe44699-p.aspx

The information contained in this document is accurate to the best of our knowledge and representative of the part described herein. It may be necessary to make modifications to the part and/or the documentation of the part, in order to implement improvements. Pasternack reserves the right to make such changes as required. Unless otherwise stated, all specifications are nominal. Pasternack does not make any representation or warranty regarding the suitability of the part described herein for any particular purpose, and Pasternack does not assume any liability arising out of the use of any part or documentation.

Pasternack Enterprises, Inc. • P.O. Box 16759, Irvine, CA 92623
Phone: (866) 727-8376 or (949) 261-1920 • **Fax:** (949) 261-7451
Sales@Pasternack.com • Techsupport@Pasternack.com

© 2020 Pasternack Enterprises All Rights Reserved

PE44699 CAD Drawing

MMCX Plug Right Angle Connector Solder Attachment for PE-SR405AL, PE-SR405FL, PE-SR405FLJ, PE-SR405TN, RG405

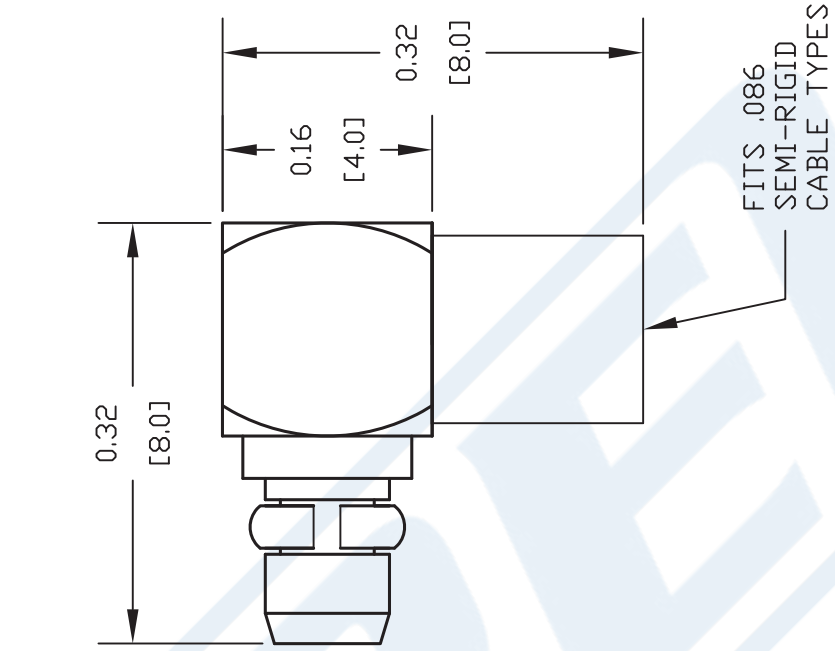

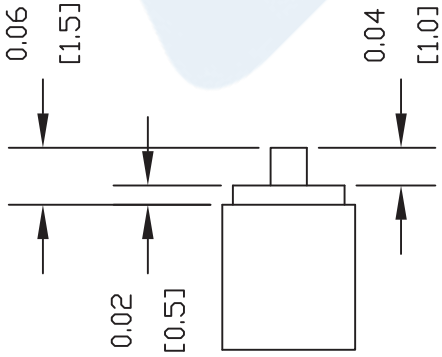

STRIPPING DIMENSIONS

ASSEMBLY PROCEDURES

1. STRIP CABLE AS SHOWN & TIN CENTER CONDUCTOR.
2. INSERT CABLE INTO BODY UNTIL OUTER CONDUCTOR BOTTOMS OUT. THE CENTER CONDUCTOR WILL PROTRUDE INTO CONTACT SLOT.
3. SOLDER CENTER CONDUCTOR INTO SLOT AND OUTER CONDUCTOR TO BODY. INSERT INSULATOR AND PRESS CAP INTO CONNECTOR BODY.

NOTES:
1. UNLESS OTHERWISE SPECIFIED ALL DIMENSIONS ARE NOMINAL.
2. ALL SPECIFICATIONS ARE SUBJECT TO CHANGE WITHOUT NOTICE AT ANY TIME.
3. DIMENSIONS ARE IN INCHES [mm].
4. FITS MIL-C-17 AND EQUIVALENT CABLES.

DWG TITLE PE44699

REV. - | FSCM NO. 53919 | CAD FILE 062611 | SCALE N/A | SIZE A | 2231

PASTERNACK ENTERPRISES, INC.
P.O BOX 16759, IRVINE, CA 92623
PHONE (949) 261-1920 FAX (949) 261-7451
WEB ADDRESS: www.pasternack.com
E-MAIL ADDRESS: sales@pasternack.com
COAXIAL & FIBER OPTICS
PASTERNACK ENTERPRISES®
ESTABLISHED 1972

© 2020 Pasternack Enterprises All Rights Reserved

PASTERNACK®
THE ENGINEER'S RF SOURCE

Flexible PE-P086HF Coax Cable Double Shielded with Blue FEP Jacket

RF Cables Technical Data Sheet PE-P086HF

Configuration

- Flexible Cable
- 2 Shield(s)

Description

Pasternack's PE-P086HF is a flexible, high frequency coaxial cable that provides similar loss characteristics to semi-rigid cable and low VSWR of 1.3:1 maximum up to 40 GHz. The low loss coax cable features silver-plated conductors and dual shields to maintain a shielding effectiveness of 110 dB. The size of the conductors for this low VSWR coax was specifically chosen to allow termination with standard connectors designed for M17/133-RG405 and other M17/133 cables. The outer shield is coated with a tough, chemical and heat resistant jacket. This PE-P086HF flexible low loss coaxial cable is a great choice for short length, high frequency system hook-up or jumper cable applications. The Pasternack coax cable can also be used as a replacement option for bent semi-rigid cable assemblies when length and routing are considered.

Electrical Specifications

Description	Minimum	Typical	Maximum	Units
Frequency Range	DC		40	GHz
Impedance		50 ±2		Ohms
Velocity of Propagation		70		%
Nominal Capacitance		29.4 [96.46]		pF/ft [pF/m]

Click the following link (or enter part number in "SEARCH" on website) to obtain additional part information including price, inventory and certifications: Flexible PE-P086HF Coax Cable Double Shielded with Blue FEP Jacket PE-P086HF

Pasternack Enterprises, Inc. • P.O. Box 16759, Irvine, CA 92623
Phone: (866) 727-8376 or (949) 261-1920 • **Fax:** (949) 261-7451
Sales@Pasternack.com • Techsupport@Pasternack.com

© 2017 Pasternack Enterprises All Rights Reserved

Flexible PE-P086HF Coax Cable Double Shielded with Blue FEP Jacket

RF Cables Technical Data Sheet PE-P086HF

Performance by Frequency Band

Description	F1	F2	F3	F4	F5	Units
Frequency	0.4	1	2	2.4	3	GHz
Attenuation, Max	13.1	21.1	30.5	33.7	38	dB/100ft
	42.98	69.23	100.07	110.56	124.67	dB/100m
Attenuation, Typ	11.9	19.2	27.7	30.6	34.5	dB/100ft
	39.04	62.99	90.88	100.39	113.19	dB/100m

Description	F6	F7	F8	F9	F10	Units
Frequency	5	10	18	40		GHz
Attenuation, Max	50.3	74.3	104.6	170.3		dB/100ft
	165.03	243.77	343.18	558.73		dB/100m
Attenuation, Typ	45.7	67.5	95.1	154.8		dB/100ft
	149.93	221.46	312.01	507.87		dB/100m

Mechanical Specifications

Diameter	0.104 in [2.64 mm]
Weight	0.013 lbs/ft [0.02 Kg/m]
Min. Bend Radius (Installation)	0.52 in [13.21 mm]

Construction Specifications

Description	Material and Plating	Diameter
Inner Conductor	Copper Clad Steel, Silver, 1 Strands	0.02 in [0.51 mm]
Conductor Type	Solid	
Dielectric	PTFE	0.064 in [1.63 mm]
First Shield	Silver Plated Copper Tape	
Second Shield	Silver Plated Copper Braid	

Click the following link (or enter part number in "SEARCH" on website) to obtain additional part information including price, inventory and certifications: Flexible PE-P086HF Coax Cable Double Shielded with Blue FEP Jacket PE-P086HF

Pasternack Enterprises, Inc. • P.O. Box 16759, Irvine, CA 92623
Phone: (866) 727-8376 or (949) 261-1920 • **Fax:** (949) 261-7451
Sales@Pasternack.com • Techsupport@Pasternack.com

© 2017 Pasternack Enterprises All Rights Reserved

Flexible PE-P086HF Coax Cable Double Shielded with Blue FEP Jacket

Jacket	FEP, Blue	0.104 in [2.64 mm]

Environmental Specifications

Temperature

Operating Range	-55 to +200 deg C

Compliance Certifications (see product page for current document)

Plotted and Other Data

Notes:

Flexible PE-P086HF Coax Cable Double Shielded with Blue FEP Jacket from Pasternack Enterprises has same day shipment for domestic and International orders. Our RF, microwave and millimeter wave products maintain a 99.4% availability and are part of the broadest selection in the industry.

Click the following link (or enter part number in "SEARCH" on website) to obtain additional part information including price, inventory and certifications: Flexible PE-P086HF Coax Cable Double Shielded with Blue FEP Jacket PE-P086HF

URL: https://www.pasternack.com/50-ohm-flexible-invalid-alias-fep-jacket-silver-plated-copper-tape-over-silver-plated-copper-braid-outer-conductor-double-shielded-blue-pe-p086hf-p.aspx

The information contained in this document is accurate to the best of our knowledge and representative of the part described herein. It may be necessary to make modifications to the part and/or the documentation of the part, in order to implement improvements. Pasternack reserves the right to make such changes as required. Unless otherwise stated, all specifications are nominal. Pasternack does not make any representation or warranty regarding the suitability of the part described herein for any particular purpose, and Pasternack does not assume any liability arising out of the use of any part or documentation.

Pasternack Enterprises, Inc. • P.O. Box 16759, Irvine, CA 92623
Phone: (866) 727-8376 or (949) 261-1920 • **Fax:** (949) 261-7451
Sales@Pasternack.com • Techsupport@Pasternack.com

© 2017 Pasternack Enterprises All Rights Reserved

PE-P086HF CAD Drawing

Flexible PE-P086HF Coax Cable Double Shielded with Blue FEP Jacket

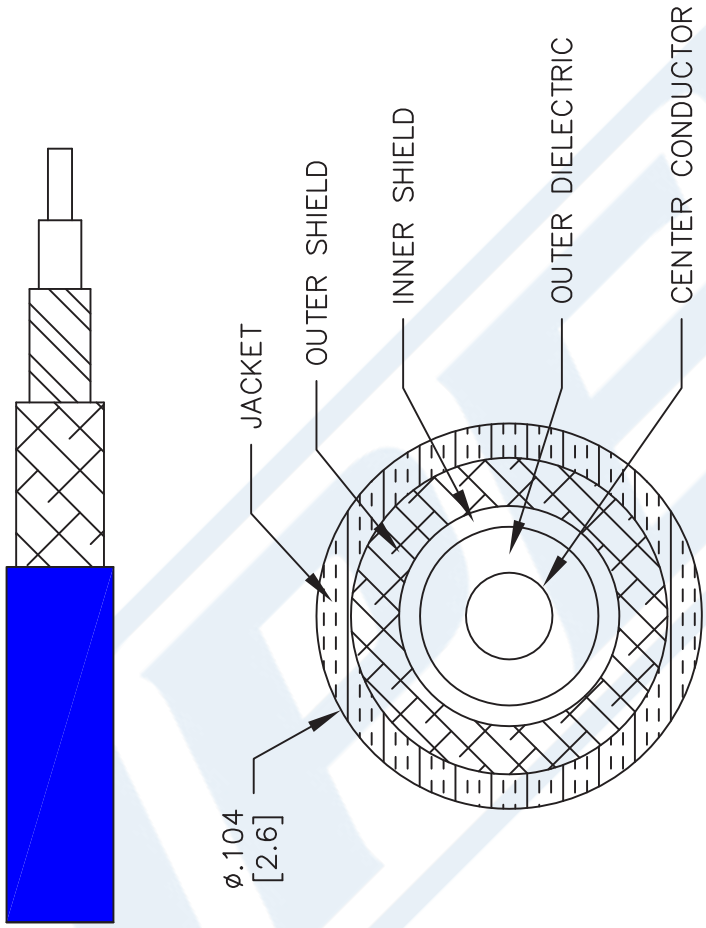

NOTES:
1. UNLESS OTHERWISE SPECIFIED ALL DIMENSIONS ARE NOMINAL.
2. ALL SPECIFICATIONS ARE SUBJECT TO CHANGE WITHOUT NOTICE AT ANY TIME.
3. DIMENSIONS ARE IN INCHES [mm].

DWG TITLE
PE-P086HF

CAD FILE 041317 | SCALE N/A | SIZE A | 2233

CAGE CODE 53919

PASTERNACK®
THE ENGINEER'S RF SOURCE
Pasternack Enterprises, Inc.
P.O. Box 16759 | Irvine | CA | 92623
Phone: (949) 261-1920 | **Fax:** (949) 261-7451
Website: www.pasternack.com | **E-Mail:** sales@pasternack.com

© 2017 Pasternack Enterprises All Rights Reserved