PASTERNACK®
THE ENGINEER'S RF SOURCE

QMA Female Bulkhead Mount Connector Crimp/Solder Attachment for RG316-DS, RG188-DS, .268 inch D Hole

Configuration

- QMA Female Connector
- 50 Ohms
- Straight Body Geometry
- RG316-DS, RG188-DS Interface Type
- Crimp/Solder Attachment
- Bulkhead

Features

- Max. Operating Frequency 18 GHz
- Gold Plated Beryllium Copper Contact

Applications

- General Purpose Test
- Rack and Panel Mount Applications
- Custom Cable Assemblies

Description

Pasternack's PE44508 QMA female bulkhead connector with crimp/solder attachment for RG316-DS and RG188-DS (.268 inch D hole) is part of our full line of RF components available for same-day shipping. Our QMA female connector operates up to a maximum frequency of 18 GHz. This QMA bulkhead connector allows designers to create external connections on their product enclosures, and can be used in a variety of other rack mount and panel mount applications.

Our QMA female bulkhead connector PE44508 datasheet specifications and drawing with dimensions are shown below in this PDF. Pasternack's broad catalog of RF, microwave and millimeter wave connectors allows designers to configure and customize their signal connections however they like. Whether the need is to provide an I/O for a board design, or simply create a custom cable assembly configuration, Pasternack has the right connector for the job. Pasternack can also expertly build your custom cable assemblies for you and ship same-day.

Electrical Specifications

Description	Minimum	Typical	Maximum	Units
Frequency Range	DC		18	GHz
Operating Voltage (AC)			350	Vrms
Test Voltage (AC)			750	Vrms
Inner Conductor DC Resistance			3	mOhms
Outer Conductor DC Resistance			2.5	mOhms
Insulation Resistance	5,000			MOhms

Performance by Frequency

Description	F1	F2	F3	F4	F5	Units
Frequency Range	DC to 3	3 to 6				GHz
VSWR, Max	1.07:1	1.11:1				

Click the following link (or enter part number in "SEARCH" on website) to obtain additional part information including price, inventory and certifications: QMA Female Bulkhead Mount Connector Crimp/Solder Attachment for RG316-DS, RG188-DS, .268 inch D Hole PE44508

Pasternack Enterprises, Inc. • P.O. Box 16759, Irvine, CA 92623
Phone: (866) 727-8376 or (949) 261-1920 • **Fax:** (949) 261-7451
Sales@Pasternack.com • Techsupport@Pasternack.com

© 2016 Pasternack Enterprises All Rights Reserved

QMA Female Bulkhead Mount Connector Crimp/Solder Attachment for RG316-DS, RG188-DS, .268 inch D Hole

Electrical Specification Notes:
RF leakage: 95 dB (up to 2 GHz), 80 dB (up to 4 GHz), 70 dB (up to 6 GHz) min.
Insertion loss = 0.05 x sqrt(fGHz) dB max up to 6 GHz.

Mechanical Specifications

Size

Length	0.95 in [24.13 mm]
Width/Dia.	0.43 in [10.92 mm]
Weight	0.006 lbs [2.72 g]
Mating Cycles	100 Cycles

Material Specifications

Description	Material	Plating
Contact	Beryllium Copper	Gold
Insulation	PTFE	
Body	Brass	Tri-Metal

Environmental Specifications

Temperature

Operating Range	-40 to +85 deg C
Storage Range	-40 to +85 deg C
Humidity	IEC 60169-1 16.3 (96 hours)
Vibration	IEC 60068-2-64 random
Thermal Shock	IEC 60169-1 16.4 (-40/+85°C)
Salt Spray	IEC 60109-1 16.7 (48 hrs)

Click the following link (or enter part number in "SEARCH" on website) to obtain additional part information including price, inventory and certifications: QMA Female Bulkhead Mount Connector Crimp/Solder Attachment for RG316-DS, RG188-DS, .268 inch D Hole PE44508

Pasternack Enterprises, Inc. • P.O. Box 16759, Irvine, CA 92623
Phone: (866) 727-8376 or (949) 261-1920 • **Fax:** (949) 261-7451
Sales@Pasternack.com • Techsupport@Pasternack.com

© 2016 Pasternack Enterprises All Rights Reserved

QMA Female Bulkhead Mount Connector Crimp/Solder Attachment for RG316-DS, RG188-DS, .268 inch D Hole

Compliance Certifications (see product page for current document)

Plotted and Other Data

Notes:

QMA Female Bulkhead Mount Connector Crimp/Solder Attachment for RG316-DS, RG188-DS, .268 inch D Hole from Pasternack Enterprises has same day shipment for domestic and International orders. Our RF, microwave and millimeter wave products maintain a 99% availability and are part of the broadest selection in the industry.

Click the following link (or enter part number in "SEARCH" on website) to obtain additional part information including price, inventory and certifications: QMA Female Bulkhead Mount Connector Crimp/Solder Attachment for RG316-DS, RG188-DS, .268 inch D Hole PE44508

URL: https://www.pasternack.com/qma-female-standard-rg316-ds-connector-pe44508-p.aspx

The information contained in this document is accurate to the best of our knowledge and representative of the part described herein. It may be necessary to make modifications to the part and/or the documentation of the part, in order to implement improvements. Pasternack reserves the right to make such changes as required. Unless otherwise stated, all specifications are nominal. Pasternack does not make any representation or warranty regarding the suitability of the part described herein for any particular purpose, and Pasternack does not assume any liability arising out of the use of any part or documentation.

Pasternack Enterprises, Inc. • P.O. Box 16759, Irvine, CA 92623
Phone: (866) 727-8376 or (949) 261-1920 • **Fax:** (949) 261-7451
Sales@Pasternack.com • Techsupport@Pasternack.com

© 2016 Pasternack Enterprises All Rights Reserved

PE44508 CAD Drawing

QMA Female Bulkhead Mount Connector Crimp/Solder Attachment
for RG316-DS, RG188-DS, .268 inch D Hole

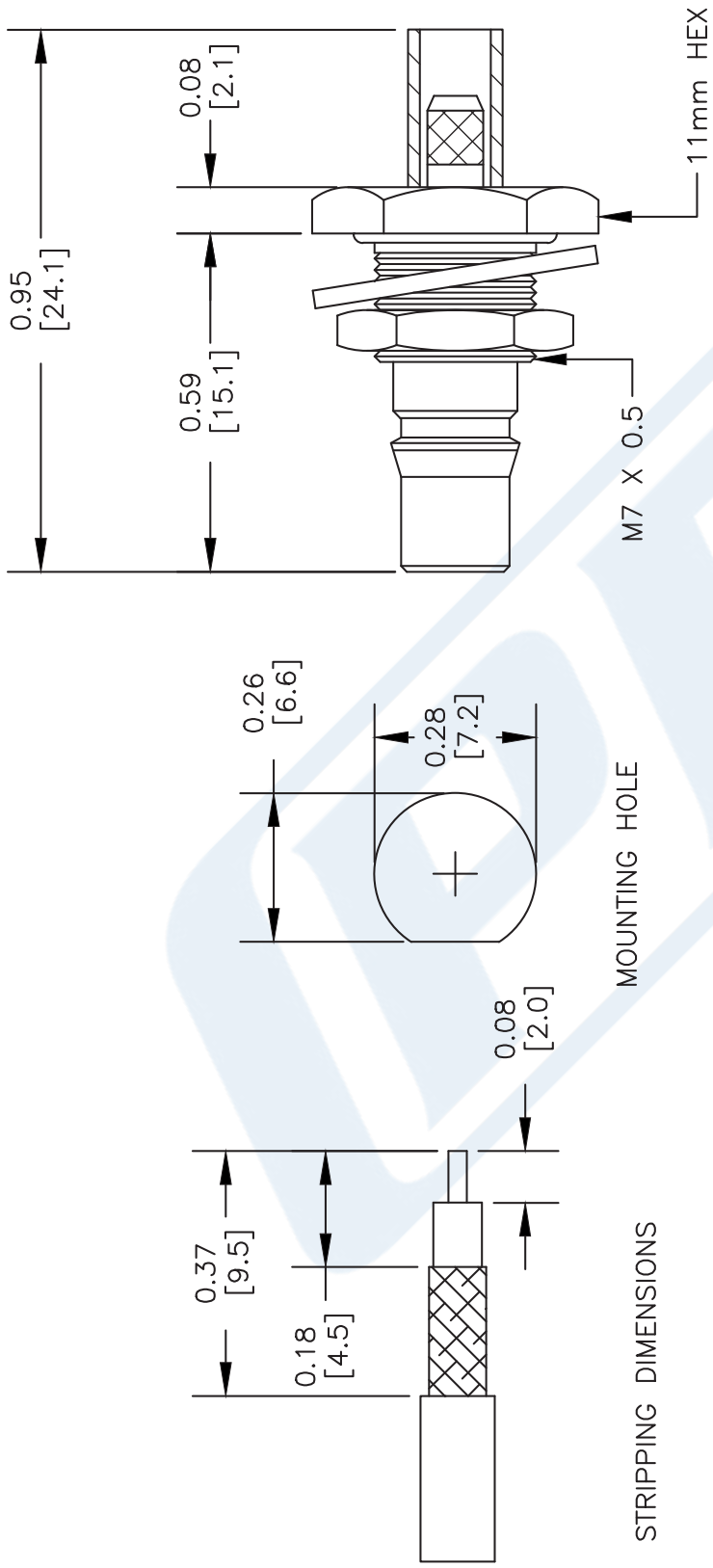

CRIMP SIZE REQUIRED

CONTACT: SOLDERED
FERRULE: .128" HEX CRIMP TOOL

NOTES:
1. UNLESS OTHERWISE SPECIFIED ALL DIMENSIONS ARE NOMINAL.
2. ALL SPECIFICATIONS ARE SUBJECT TO CHANGE WITHOUT NOTICE AT ANY TIME.
3. DIMENSIONS ARE IN INCHES [mm].
4. FITS MIL-C-17 AND EQUIVALENT CABLES.

DWG TITLE
PE44508

FSCM NO. 53919

CAD FILE 010411 | SCALE N/A | SIZE A | 127

PASTERNACK®
Pasternack Enterprises, Inc.
P.O. Box 16759 | Irvine | CA | 92623
Phone: (949) 261-1920 | **Fax:** (949) 261-7451
Website: www.pasternack.com | **E-Mail:** sales@pasternack.com

© 2016 Pasternack Enterprises All Rights Reserved

PASTERNACK®
THE ENGINEER'S RF SOURCE

MMCX Jack Connector Crimp/Solder Attachment For RG316-DS, RG188-DS

RF Connectors Technical Data Sheet PE44852

Configuration

- MMCX Jack Connector
- 50 Ohms
- Straight Body Geometry
- RG316-DS, RG188-DS Interface Type
- Crimp/Solder Attachment

Features

- Gold Plated Beryllium Copper Contact

Applications

- General Purpose Test
- Custom Cable Assemblies

Description

Pasternack's PE44852 MMCX jack connector with crimp/solder attachment for RG316-DS and RG188-DS is part of our full line of RF components available for same-day shipping.

Our MMCX jack connector PE44852 datasheet specifications and drawing with dimensions are shown below in this PDF. Pasternack's broad catalog of RF, microwave and millimeter wave connectors allows designers to configure and customize their signal connections however they like. Whether the need is to provide an I/O for a board design, or simply create a custom cable assembly configuration, Pasternack has the right connector for the job. Pasternack can also expertly build your custom cable assemblies for you and ship same-day.

Mechanical Specifications

Size

Length	1 in [25.4 mm]
Width/Dia.	0.157 in [3.99 mm]
Weight	0.006 lbs [2.72 g]

Material Specifications

Description	Material	Plating
Contact	Beryllium Copper	Gold
Insulation	PTFE	
Body	Brass	Gold

Click the following link (or enter part number in "SEARCH" on website) to obtain additional part information including price, inventory and certifications: MMCX Jack Connector Crimp/Solder Attachment For RG316-DS, RG188-DS PE44852

Pasternack Enterprises, Inc. • P.O. Box 16759, Irvine, CA 92623
Phone: (866) 727-8376 or (949) 261-1920 • **Fax:** (949) 261-7451
Sales@Pasternack.com • Techsupport@Pasternack.com

© 2017 Pasternack Enterprises All Rights Reserved

MMCX Jack Connector Crimp/Solder Attachment For RG316-DS, RG188-DS

Compliance Certifications (see product page for current document)

Plotted and Other Data

Notes:

MMCX Jack Connector Crimp/Solder Attachment For RG316-DS, RG188-DS from Pasternack Enterprises has same day shipment for domestic and International orders. Our RF, microwave and millimeter wave products maintain a 99% availability and are part of the broadest selection in the industry.

Click the following link (or enter part number in "SEARCH" on website) to obtain additional part information including price, inventory and certifications: MMCX Jack Connector Crimp/Solder Attachment For RG316-DS, RG188-DS PE44852

URL: https://www.pasternack.com/mmcx-jack-standard-rg316-ds-rg188-ds-connector-pe44852-p.aspx

The information contained in this document is accurate to the best of our knowledge and representative of the part described herein. It may be necessary to make modifications to the part and/or the documentation of the part, in order to implement improvements. Pasternack reserves the right to make such changes as required. Unless otherwise stated, all specifications are nominal. Pasternack does not make any representation or warranty regarding the suitability of the part described herein for any particular purpose, and Pasternack does not assume any liability arising out of the use of any part or documentation.

Pasternack Enterprises, Inc. • P.O. Box 16759, Irvine, CA 92623
Phone: (866) 727-8376 or (949) 261-1920 • **Fax:** (949) 261-7451
Sales@Pasternack.com • Techsupport@Pasternack.com

© 2017 Pasternack Enterprises All Rights Reserved

PE44852 CAD Drawing

MMCX Jack Connector Crimp/Solder Attachment For RG316-DS, RG188-DS

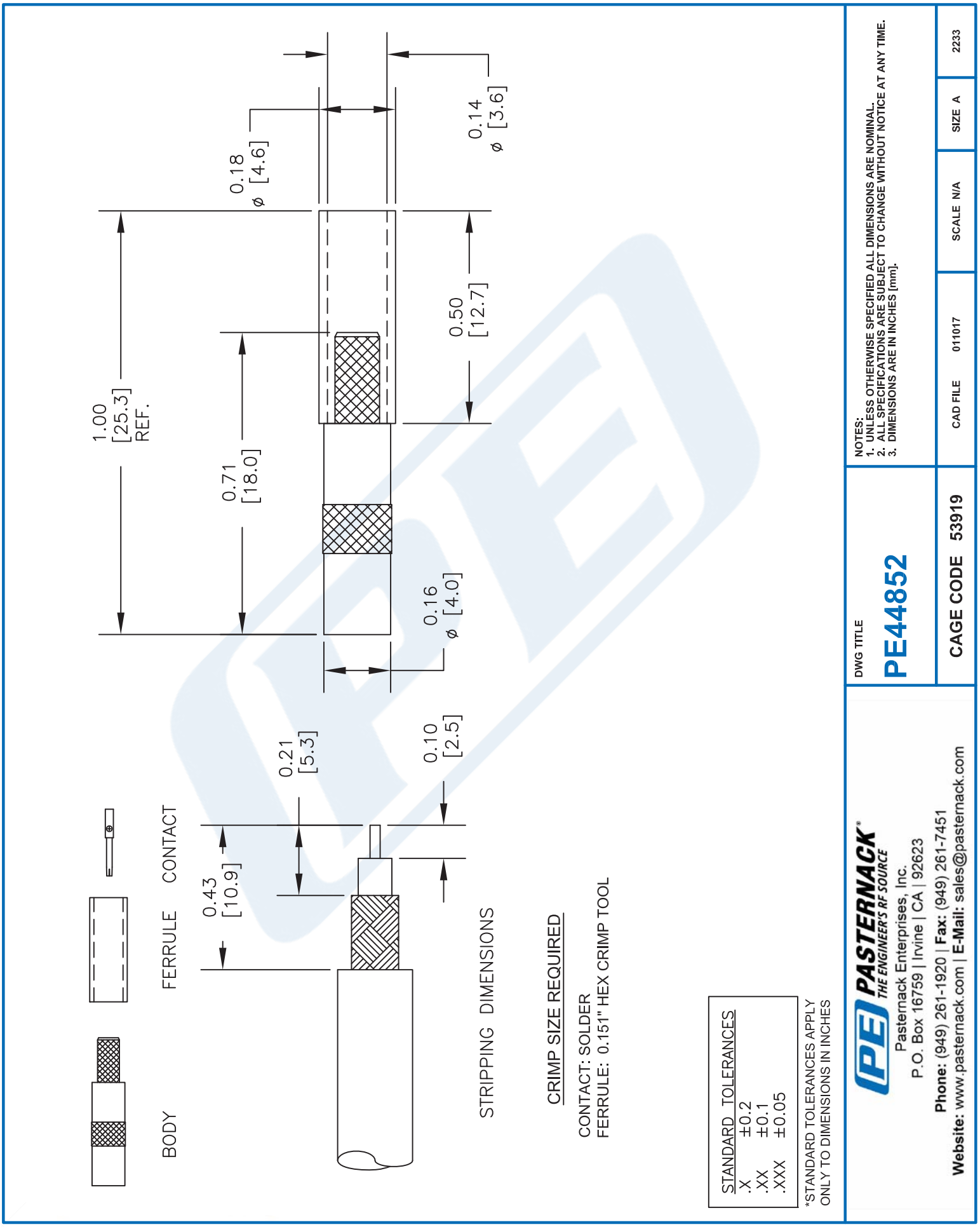

© 2017 Pasternack Enterprises All Rights Reserved

PASTERNACK®
THE ENGINEER'S RF SOURCE

Flexible RG188 Coax Cable Double Shielded with White PTFE Jacket

Configuration

- Flexible Cable
- 2 Shield(s)

Electrical Specifications

Description	Minimum	Typical	Maximum	Units
Frequency Range	DC		10	GHz
Impedance		50		Ohms
Dielectric Withstanding Voltage (AC)			2,000	Vrms
Nominal Capacitance		32 [104.99]		pF/ft [pF/m]

Performance by Frequency Band

Description	F1	F2	F3	F4	F5	Units
Frequency	0.01	0.1	1	5	10	GHz
Attenuation, Typ	3.8	11.5	30	79	133	dB/100ft
	12.47	37.73	98.43	259.19	436.35	dB/100m
Input Power (CW), Max	1,250	450	160	57		Watts

Mechanical Specifications

Diameter	0.118 in [3 mm]
Weight	0.016 lbs/ft [0.02 Kg/m]

Construction Specifications

Description	Material and Plating	Diameter
Inner Conductor	Copper Clad Steel, Silver, 7 Strands	0.02 in [0.51 mm]
Conductor Type	Stranded	
Dielectric	PTFE	0.06 in [1.52 mm]
First Shield	Silver Plated Copper Braid 90% coverage	0.078 in [1.98 mm]

Click the following link (or enter part number in "SEARCH" on website) to obtain additional part information including price, inventory and certifications: Flexible RG188 Coax Cable Double Shielded with White PTFE Jacket RG188-DS

Pasternack Enterprises, Inc. • P.O. Box 16759, Irvine, CA 92623
Phone: (866) 727-8376 or (949) 261-1920 • **Fax:** (949) 261-7451
Sales@Pasternack.com • Techsupport@Pasternack.com

© 2017 Pasternack Enterprises All Rights Reserved

Second Shield	Silver Plated Copper Braid 90% coverage	0.096 in [2.44 mm]
Jacket	PTFE, White	0.118 in [3 mm]

Environmental Specifications

Temperature

Operating Range -55 to +200 deg C

Compliance Certifications (see product page for current document)

Plotted and Other Data

Notes:

Flexible RG188 Coax Cable Double Shielded with White PTFE Jacket from Pasternack Enterprises has same day shipment for domestic and International orders. Our RF, microwave and millimeter wave products maintain a 99.4% availability and are part of the broadest selection in the industry.

Click the following link (or enter part number in "SEARCH" on website) to obtain additional part information including price, inventory and certifications: Flexible RG188 Coax Cable Double Shielded with White PTFE Jacket RG188-DS

URL: https://www.pasternack.com/flexible-0.122-rg188-ds-50-ohm-coax-cable-ptfe-jacket-rg188-ds-p.aspx

The information contained in this document is accurate to the best of our knowledge and representative of the part described herein. It may be necessary to make modifications to the part and/or the documentation of the part, in order to implement improvements. Pasternack reserves the right to make such changes as required. Unless otherwise stated, all specifications are nominal. Pasternack does not make any representation or warranty regarding the suitability of the part described herein for any particular purpose, and Pasternack does not assume any liability arising out of the use of any part or documentation.

Pasternack Enterprises, Inc. • P.O. Box 16759, Irvine, CA 92623
Phone: (866) 727-8376 or (949) 261-1920 • **Fax:** (949) 261-7451
Sales@Pasternack.com • Techsupport@Pasternack.com

© 2017 Pasternack Enterprises All Rights Reserved

RG188-DS CAD Drawing

Flexible RG188 Coax Cable Double Shielded with White PTFE Jacket

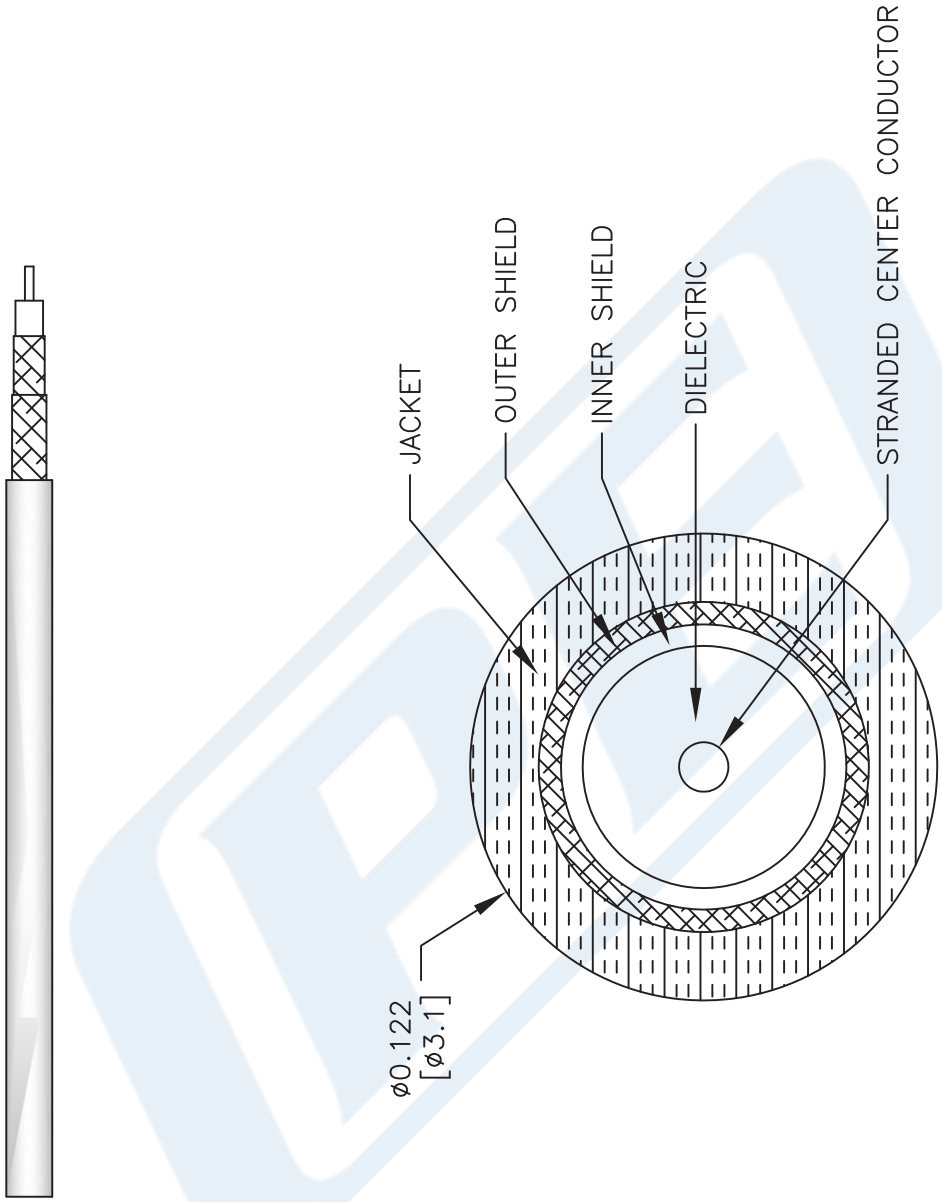

NOTES:
1. UNLESS OTHERWISE SPECIFIED ALL DIMENSIONS ARE NOMINAL.
2. ALL SPECIFICATIONS ARE SUBJECT TO CHANGE WITHOUT NOTICE AT ANY TIME.
3. DIMENSIONS ARE IN INCHES [mm].

DWG TITLE
RG188-DS

CAGE CODE 53919

CAD FILE 062817 | SCALE N/A | SIZE A | 2233

PASTERNACK®
THE ENGINEER'S RF SOURCE
Pasternack Enterprises, Inc.
P.O. Box 16759 | Irvine | CA | 92623
Phone: (949) 261-1920 | **Fax:** (949) 261-7451
Website: www.pasternack.com | **E-Mail:** sales@pasternack.com

© 2017 Pasternack Enterprises All Rights Reserved