PASTERNACK
an INFINITE brand

BNC Male Right Angle Connector Crimp/Non-Solder Contact Attachment for LMR-240, LMR-240-DB, LMR-240-UF, LMR-240-FR, RG8X, PE-C240

RF Connectors
Technical Data Sheet

TIMES MICROWAVE SYSTEMS An Amphenol Company

EZ-240-BM-RA-X

Times Microwave Systems Connector Specification

Configuration

- BNC Male Connector
- 50 Ohms
- Right Angle Body Geometry
- Connector Interface Types: LMR-240, LMR-240-DB, LMR-240-UF, LMR-240-FR, RG8X, PE-C240

Features

- Max. Operating Frequency 6 GHz
- Good VSWR of 1.35:1
- Gold over nickel Plated Brass Contact
- 50 µin minimum contact plating

Applications

- General Purpose Test
- Custom Cable Assemblies

Description

EZ-240-BM-RA-X BNC male right angle coaxial connector has an interface type of BNC male LMR-240, LMR-240-DB, LMR-240-UF, LMR-240-FR, RG8X, and PE-C240 and a 50 Ohms impedance. Pasternack's BNC male connector uses crimp/non-solder contact as an attachment method. Our male BNC right angle coaxial connector provides a maximum frequency of 6 GHz.

The Pasternack right angle BNC male coaxial connector has a teflon dielectric type and a VSWR of 1.35:1. Pasternack's BNC coaxial connector has a brass body with tri-metal plating. Our EZ-240-BM-RA-X BNC right angle connector uses a gold over nickel-plated brass contact. Additional RF connector specs and dimensions for this component can be found on its PDF specification datasheet and CAD drawings above.

The radio frequency connector is made from brass material and has a contact life of 500 cycles or more. Our high-quality EZ-240-BM-RA-X features an 80 µin minimum body plating specification. The Pasternack EZ-240-BM-RA-X BNC connector operates at a temperature range of -55 to 155 deg C. The Pasternack BNC male connector has a maximum operating voltage of 500 Vrms.

This Pasternack right angle male BNC connector will ship the same business day as purchased. Our BNC right angle male connector is part of over 40,000 RF, microwave, and millimeter wave components in stock for local, domestic, and international shipment. For further information on similar products, our expert technical support and trained sales team can get you the ideal RF connector as per your requirements.

Electrical Specifications

Description	Minimum	Typical	Maximum	Units
Frequency Range	DC		6	GHz
VSWR			1.35:1	
Operating Voltage (AC)			500	Vrms
Impedance		50		Ohms
Dielectric Withstanding Voltage (DC)			750	Vdc
Insulation Resistance	5,000			MOhms

Click the following link (or enter part number in "SEARCH" on website) to obtain additional part information including price, inventory and certifications: BNC Male Right Angle Connector Crimp/Non-Solder Contact Attachment for LMR-240, LMR-240-DB, LMR-240-UF, LMR-240-FR, RG8X, PE-C240 EZ-240-BM-RA-X

Pasternack Enterprises, Inc. • P.O. Box 16759, Irvine, CA 92623
Phone: (866) 727-8376 or (949) 261-1920 • **Fax:** (949) 261-7451
Sales@Pasternack.com • Techsupport@Pasternack.com

© 2020 Pasternack Enterprises All Rights Reserved

BNC Male Right Angle Connector Crimp/Non-Solder Contact Attachment for LMR-240, LMR-240-DB, LMR-240-UF, LMR-240-FR, RG8X, PE-C240

Mechanical Specifications

Size

Length	1.32 in [33.53 mm]
Width	0.57 in [14.50 mm]
Height	1.19 in [30.10 mm]
Weight	0.10 lbs [45.36 g]
Mating Cycles	500 Cycles
Cable Retention Force	60 lbs 27.22 kg

Material Specifications

Description	Material	Plating
Contact	Brass	Gold over nickel 50 µin minimum
Insulation	Teflon	
Body	Brass	Tri-Metal 80 µin minimum
Crimp Sleeve	Brass	Tri-Metal 80 µin minimum

Environmental Specifications

Temperature

Operating Range	-55 to 155 deg C
Shock	US MIL-STD 202, Meth.213, Cond.I
Vibration	US MIL-STD 202, Meth.204, Cond.B
Thermal Shock	US MIL-STD 202, Meth.107, Cond.B

Compliance Certifications (see product page for current document)

Plotted and Other Data

Notes:

Click the following link (or enter part number in “SEARCH” on website) to obtain additional part information including price, inventory and certifications: BNC Male Right Angle Connector Crimp/Non-Solder Contact Attachment for LMR-240, LMR-240-DB, LMR-240-UF, LMR-240-FR, RG8X, PE-C240 EZ-240-BM-RA-X

Pasternack Enterprises, Inc. • P.O. Box 16759, Irvine, CA 92623
Phone: (866) 727-8376 or (949) 261-1920 • **Fax:** (949) 261-7451
Sales@Pasternack.com • Techsupport@Pasternack.com

© 2020 Pasternack Enterprises All Rights Reserved

BNC Male Right Angle Connector Crimp/Non-Solder Contact Attachment for LMR-240, LMR-240-DB, LMR-240-UF, LMR-240-FR, RG8X, PE-C240

RF Connectors
Technical Data Sheet

TIMES MICROWAVE SYSTEMS

EZ-240-BM-RA-X

BNC Male Right Angle Connector Crimp/Non-Solder Contact Attachment for LMR-240, LMR-240-DB, LMR-240-UF, LMR-240-FR, RG8X, PE-C240 from Pasternack Enterprises has same day shipment for domestic and International orders. Our RF, microwave and millimeter wave products maintain a 99.4% availability and are part of the broadest selection in the industry.

Click the following link (or enter part number in “SEARCH” on website) to obtain additional part information including price, inventory and certifications: BNC Male Right Angle Connector Crimp/Non-Solder Contact Attachment for LMR-240, LMR-240-DB, LMR-240-UF, LMR-240-FR, RG8X, PE-C240 EZ-240-BM-RA-X

URL: https://www.pasternack.com/bnc-male-lmr-240-lmr-240-db-connector-ez-240-bm-ra-x-p.aspx

The information contained in this document is accurate to the best of our knowledge and representative of the part described herein. It may be necessary to make modifications to the part and/or the documentation of the part, in order to implement improvements. Pasternack reserves the right to make such changes as required. Unless otherwise stated, all specifications are nominal. Pasternack does not make any representation or warranty regarding the suitability of the part described herein for any particular purpose, and Pasternack does not assume any liability arising out of the use of any part or documentation.

Pasternack Enterprises, Inc. • P.O. Box 16759, Irvine, CA 92623
Phone: (866) 727-8376 or (949) 261-1920 • **Fax:** (949) 261-7451
Sales@Pasternack.com • Techsupport@Pasternack.com

© 2020 Pasternack Enterprises All Rights Reserved

EZ-240-BM-RA-X CAD Drawing

BNC Male Right Angle Connector Crimp/Non-Solder Contact Attachment for
LMR-240, LMR-240-DB, LMR-240-UF, LMR-240-FR, RG8X, PE-C240

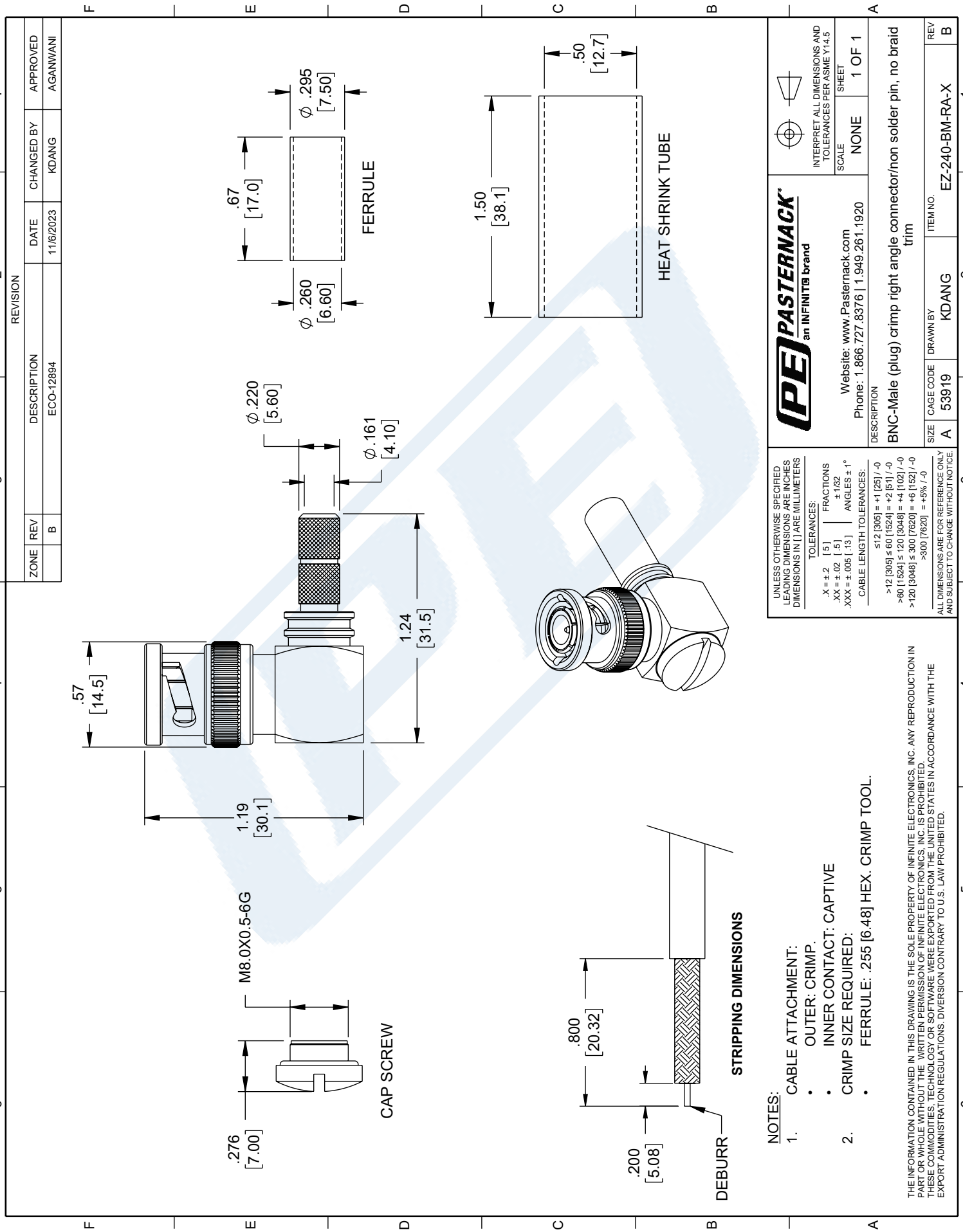

© 2020 Pasternack Enterprises All Rights Reserved

Mini UHF Male Connector Crimp/Solder Attachment for LMR-240, LMR-240-UF, LMR-240-DB, LMR-240-FR

TC-240-MUHF

Configuration
- Mini UHF Male Connector
- 50 Ohms
- Straight Body Geometry
- Connector Interface Types: LMR-240, LMR-240-UF, LMR-240-DB, LMR-240-FR

Features
- Max. Operating Frequency 1 GHz
- Good VSWR of 1.35:1
- Gold Plated Brass Contact

Applications
- General Purpose Test
- Custom Cable Assemblies

Description

Times Microwave's TC-240-MUHF Mini UHF Male Connector Crimp/Solder Attachment for LMR-240, LMR-240-UF, LMR-240-DB and LMR-240-FR Cable is part of our full line of RF components available for same-day shipping. Times Microwave's Mini UHF male connector operates up to a maximum frequency of 1 GHz and offers good VSWR of 1.35:1.

Times Microwave's Mini UHF male connector TC-240-MUHF datasheet specifications and drawing with dimensions are shown below in this PDF. Pasternack's broad catalog of RF, microwave and millimeter wave connectors allows designers to configure and customize their signal connections however they like. Whether the need is to provide an I/O for a board design, or simply create a custom cable assembly configuration, Pasternack has the right connector for the job. Pasternack can also expertly build your custom cable assemblies for you and ship same-day.

Electrical Specifications

Description	Minimum	Typical	Maximum	Units
Frequency Range	DC		1,000	MHz
VSWR			1.35:1	
Insertion Loss			0.15	dB
Operating Voltage (AC)			300	Vrms
Impedance		50		Ohms

Electrical Specification Notes:
Insertion loss is =0.15*SQRT(FGHz)

Mechanical Specifications

Size

Length	0.45 in [11.43 mm]
Width	0.45 in [11.43 mm]
Height	1.1 in [27.94 mm]
Weight	0.01 lbs [4.54 g]

© 2025 Infinite Electronics, Inc. Pasternack is a registered trademark of Infinite Electronics, Inc.
+1 (866) 558-2786 | sales@pasternack.com | pasternack.com

Mini UHF Male Connector Crimp/Solder Attachment for LMR-240, LMR-240-UF, LMR-240-DB, LMR-240-FR

TC-240-MUHF

Material Specifications

Description	Material	Plating
Contact	Brass	Gold
Insulation	Delrin	
Body	Brass	Nickel

Environmental Specifications

Temperature

Compliance Certifications (see product page for current document)

Plotted and Other Data

Notes:

Mini UHF Male Connector Crimp/Solder Attachment for LMR-240, LMR-240-UF, LMR-240-DB, LMR-240-FR from Pasternack Enterprises has same day shipment for domestic and International orders. Our RF, microwave and millimeter wave products maintain a 99.4% availability and are part of the broadest selection in the industry.

Click the following link (or enter part number in "SEARCH" on website) to obtain additional part information including price, inventory and certifications: Mini UHF Male Connector Crimp/Solder Attachment for LMR-240, LMR-240-UF, LMR-240-DB, LMR-240-FR TC-240-MUHF

URL: https://www.pasternack.com/mini-uhf-male-lmr-240-lmr-240-uf-connector-tc-240-muhf.html

The information contained within this document is accurate to the best of our knowledge and representative of the part described herein. It may be necessary to make modifications to the part and/or the documentation of the part in order to impliment improvements. Pasternack Enterprises reserves the right to make such changes as required. Unless otherwise stated, all specifications are nominal. Pasternack Enterprises does not make any representation or warranty regarding the suitability of the part described herein for any particular purpose, and Pasternack Enterprises does not assume liability arising out of the use of any part or document.

© 2025 Infinite Electronics, Inc. Pasternack is a registered trademark of Infinite Electronics, Inc.

TC-240-MUHF CAD Drawing

Mini UHF Male Connector Crimp/Solder Attachment for LMR-240, LMR-240-UF, LMR-240-DB, LMR-240-FR

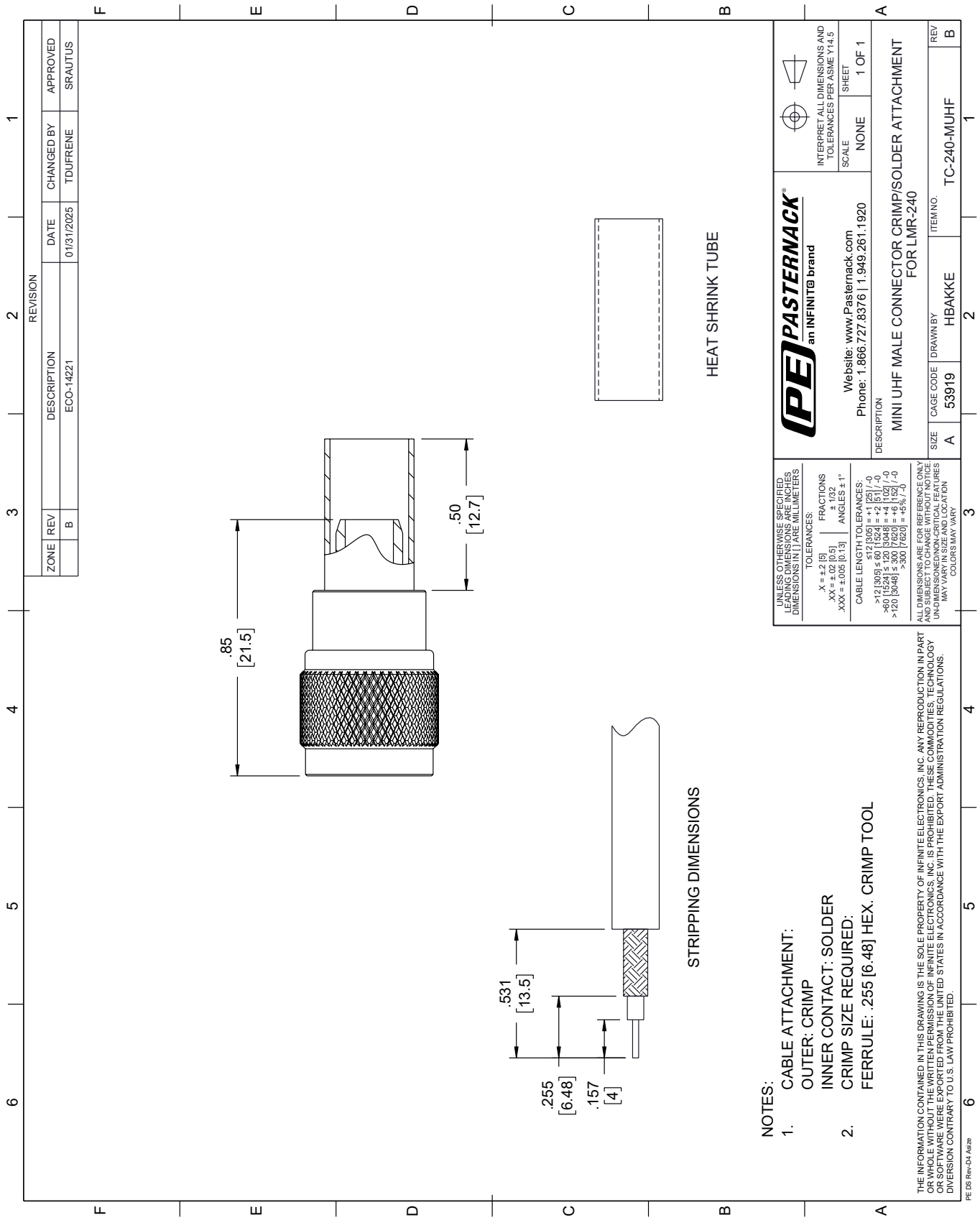

© 2025 Infinite Electronics, Inc. Pasternack is a registered trademark of Infinite Electronics, Inc.

Low Loss Flexible LMR-240 Outdoor Rated Coax Cable Double Shielded with Black PE Jacket

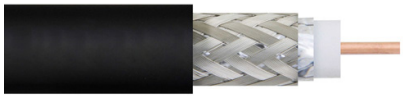

LMR-240

TIMES MICROWAVE SYSTEMS

Times Microwave Systems Connector Specification

Configuration

- Low Loss, Outdoor Flexible Cable
- 2 Shield(s)

Features

- Max Operating Frequency of 8 GHz
- Low Loss Cable
- Phase Velocity 84% VoP

Applications

- General Purpose RF Interconnect
- Laboratory Applications

Description

LMR-240 part number from Pasternack is a LMR-240 coax cable that is flexible. Pasternack LMR-240 flexible coax cable is 50 Ohm and has a PE (F) dielectric. Our LMR-240 coax is constructed with a 0.24 jacket made of PE. LMR-240 coax has a shield count of 2, a RF shielding of 90 dB and the maximum frequency for this Pasternack cable is 8 GHz. LMR-240 coax cable has an attenuation at 1 GHz of 8 dB.

Pasternack LMR-240 coax cables are part of over 40,000 RF, microwave and millimeter wave components. LMR-240 cables and our other RF parts are available for same day shipping worldwide. Custom RF cable assemblies using LMR-240 or other coax can be built and shipped same day as well.

Electrical Specifications

Description	Minimum	Typical	Maximum	Units
Frequency Range	DC		8	GHz
Cutoff Frequency		31		GHz
Impedance		50		Ohms
Velocity of Propagation		84		%
Time Delay		1.21 [3.97]		ns/ft [ns/m]
Shielding Effectiveness	90			dB
Dielectric Withstanding Voltage (DC)			1,500	Vdc
Jacket Spark			5,000	Vrms
Inner Conductor DC Resistance			3.2	Ohms/1000ft
Outer Conductor DC Resistance			3.89	Ohms/1000ft
Nominal Capacitance		24.2 [79.4]		pF/ft [pF/m]
Nominal Inductance		0.06 [0.2]		uH/ft [uH/m]
Input Power (Peak)			5.6	kWatts

© 2023 Infinite Electronics, Inc. Pasternack is a registered trademark of Infinite Electronics, Inc.
+1 (866) 558-2786 | sales@pasternack.com | pasternack.com

Low Loss Flexible LMR-240 Outdoor Rated Coax Cable Double Shielded with Black PE Jacket

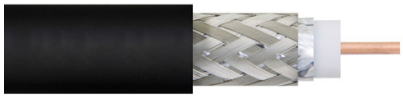

LMR-240

Performance by Frequency Band

Description	F1	F2	F3	F4	F5	Units
Frequency	50	150	220	450	900	MHz
Attenuation, Typ	1.7	3	3.7	5.3	7.6	dB/100ft
	5.58	9.84	12.14	17.39	24.93	dB/100m
Input Power (CW), Max	1,150	660	540	380	260	Watts

Description	F6	F7	F8	F9	F10	Units
Frequency	1.5	1.8	2	2.5	5.8	GHz
Attenuation, Typ	9.9	10.9	11.5	12.9	20.4	dB/100ft
	32.48	35.76	37.73	42.32	66.93	dB/100m
Input Power (CW), Max	200	180	170	150	100	Watts

Mechanical Specifications

Diameter	0.24 in [6.1 mm}
Weight	0.033 lbs/ft [0.05 kg/m]
Min. Bend Radius (Installation)	0.75 in [19.05 mm]
Min. Bend Radius (Repeated)	2.5 in [63.5 mm]
Bending Moment	0.25 lbs-ft [0.34 N-m]
Tensile Strength	80 lbs [36.29 kg]
Flat Plate Crush	20 lbs/in [0.36 kg/mm]

Construction Specifications

Description	Material and Plating	Diameter
Inner Conductor	Copper, 1 Strand	0.056 in [1.42 mm]
Conductor Type	Solid	
Dielectric	PE (F)	0.15 in [3.81 mm]
First Shield	Aluminum Tape	
Second Shield	Tinned Copper Braid	
Jacket	PE, Black	0.24 in [6.1 mm]

Environmental Specifications

Temperature

Operating Range	-40 to 85 deg C
Storage Range	-70 to 85 deg C

Compliance Certifications (see product page for current document)

Plotted and Other Data

Notes:

© 2023 Infinite Electronics, Inc. Pasternack is a registered trademark of Infinite Electronics, Inc.
+1 (866) 558-2786 | sales@pasternack.com | pasternack.com

Low Loss Flexible LMR-240 Outdoor Rated Coax Cable Double Shielded with Black PE Jacket

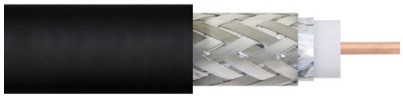

LMR-240

Low Loss Flexible LMR-240 Outdoor Rated Coax Cable Double Shielded with Black PE Jacket from Pasternack Enterprises has same day shipment for domestic and International orders. Our RF, microwave and millimeter wave products maintain a 99.4% availability and are part of the broadest selection in the industry.

Click the following link (or enter part number in "SEARCH" on website) to obtain additional part information including price, inventory and certifications: Low Loss Flexible LMR-240 Outdoor Rated Coax Cable Double Shielded with Black PE Jacket LMR-240

URL: https://www.pasternack.com/50-ohm-low-loss-flexible-lmr240-pe-jacket-double-shielded-black-lmr-240-p.aspx

The information contained within this document is accurate to the best of our knowledge and representative of the part described herein. It may be necessary to make modifications to the part and/or the documentation of the part in order to impliment improvements. Pasternack Enterprises reserves the right to make such changes as required. Unless otherwise stated, all specifications are nominal. Pasternack Enterprises does not make any representation or warranty regarding the suitability of the part described herein for any particular purpose, and Pasternack Enterprises does not assume liability arising out of the use of any part or document.

© 2023 Infinite Electronics, Inc. Pasternack is a registered trademark of Infinite Electronics, Inc.

LMR-240 CAD Drawing

Low Loss Flexible LMR-240 Outdoor Rated Coax Cable Double Shielded with Black PE Jacket

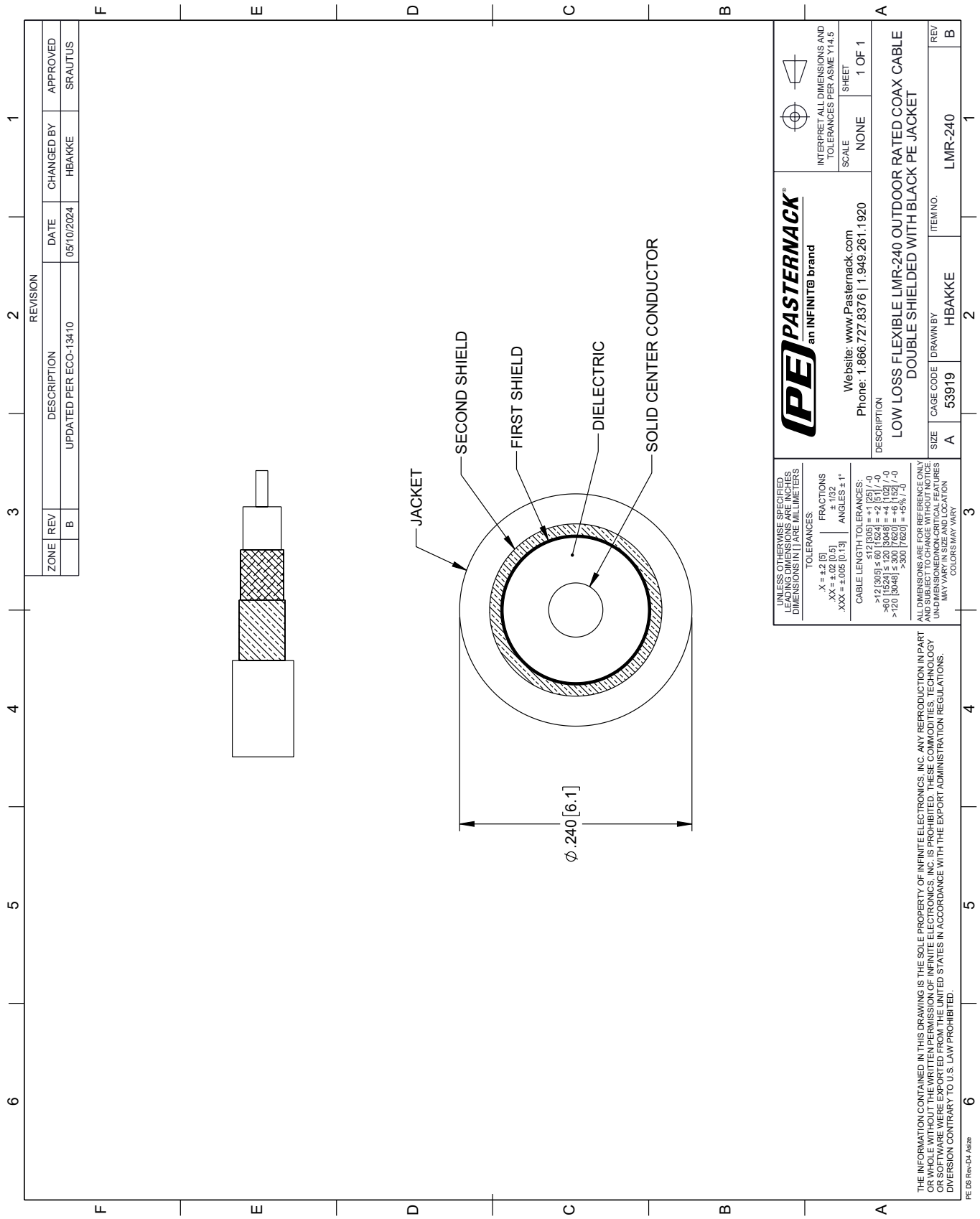

© 2023 Infinite Electronics, Inc. Pasternack is a registered trademark of Infinite Electronics, Inc.