PASTERNACK
an INFINITE brand

SMA Female Connector Solder Attachment 4 Hole Flange Mount for RG405, RG405 Tinned, PE-SR405FL, PE-SR405AL, .340 inch Hole Spacing

RF Connectors
Technical Data Sheet

PE44998

Configuration

- SMA Female Connector
- 50 Ohms
- Straight Body Geometry
- Connector Interface Types: RG405, RG405 Tinned, PE-SR405FL, PE-SR405AL, PE-SR405FLJ, PE-SR405TN
- 4 Hole Flange

Features

- Max. Operating Frequency 18 GHz
- Good VSWR of 1.45:1
- Gold Plated Beryllium Copper Contact

Applications

- General Purpose Test
- Rack and Panel Mount Applications
- Custom Cable Assemblies

Description

Pasternack's PE44998 SMA female 4 hole flange mount connector with solder/solder attachment for RG405, RG405 Tinned, PE-SR405FL, PE-SR405AL, PE-SR405FLJ and PE-SR405TN is part of our full line of RF components available for same-day shipping. Our SMA female connector operates up to a maximum frequency of 18 GHz and offers good VSWR of 1.45:1. This SMA 4 hole flange connector allows designers to create external connections on their product enclosures, and can be used in a variety of other rack mount and panel mount applications.

Our SMA female 4 hole flange connector PE44998 datasheet specifications and drawing with dimensions are shown below in this PDF. Pasternack's broad catalog of RF, microwave and millimeter wave connectors allows designers to configure and customize their signal connections however they like. Whether the need is to provide an I/O for a board design, or simply create a custom cable assembly configuration, Pasternack has the right connector for the job. Pasternack can also expertly build your custom cable assemblies for you and ship same-day.

Electrical Specifications

Description	Minimum	Typical	Maximum	Units
Frequency Range	DC		18	GHz
VSWR			1.45:1	

Mechanical Specifications

Size	
Length	0.5 in [12.7 mm]
Width/Dia.	0.5 in [12.70 mm]
Height	0.5 in [12.7 mm]
Weight	0.007 lbs [3.18 g]

Click the following link (or enter part number in "SEARCH" on website) to obtain additional part information including price, inventory and certifications: SMA Female Connector Solder Attachment 4 Hole Flange Mount for RG405, RG405 Tinned, PE-SR405FL, PE-SR405AL, .340 inch Hole Spacing PE44998

Pasternack Enterprises, Inc. • P.O. Box 16759, Irvine, CA 92623
Phone: (866) 727-8376 or (949) 261-1920 • **Fax:** (949) 261-7451
Sales@Pasternack.com • Techsupport@Pasternack.com

© 2020 Pasternack Enterprises All Rights Reserved

SMA Female Connector Solder Attachment 4 Hole Flange Mount for RG405, RG405 Tinned, PE-SR405FL, PE-SR405AL, .340 inch Hole Spacing

Material Specifications

Description	Material	Plating
Contact	Beryllium Copper	Gold
Insulation	PTFE	
Body	Stainless Steel	Gold

Environmental Specifications

Compliance Certifications (see product page for current document)

Plotted and Other Data

Notes:

Click the following link (or enter part number in “SEARCH” on website) to obtain additional part information including price, inventory and certifications: SMA Female Connector Solder Attachment 4 Hole Flange Mount for RG405, RG405 Tinned, PE-SR405FL, PE-SR405AL, .340 inch Hole Spacing PE44998

Pasternack Enterprises, Inc. • P.O. Box 16759, Irvine, CA 92623
Phone: (866) 727-8376 or (949) 261-1920 • **Fax:** (949) 261-7451
Sales@Pasternack.com • Techsupport@Pasternack.com

© 2020 Pasternack Enterprises All Rights Reserved

SMA Female Connector Solder Attachment 4 Hole Flange Mount for RG405, RG405 Tinned, PE-SR405FL, PE-SR405AL, .340 inch Hole Spacing

Assembly Instruction

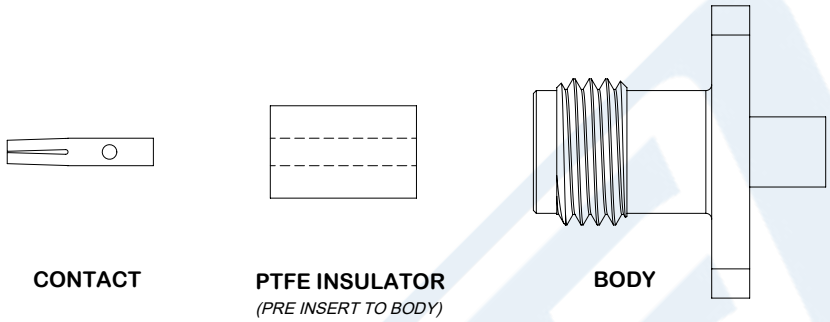

1. STRIP CABLE AS SHOWN. DO NOT NICK CENTER CONDUCTOR.

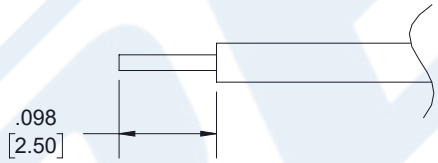

2. PLACE CONTACT OVER CENTER CONDUCTOR AS SHOWN. SOLDER CONTACT TO CENTER CONDUCTOR AS SHOWN.

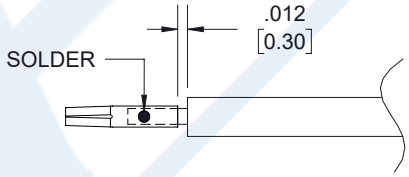

3. INSERT BODY INTO THE CONTACT UNTIL CONTACT SITS FLUSH TO THE DIELECTRIC. SOLDER BODY TO CABLE.

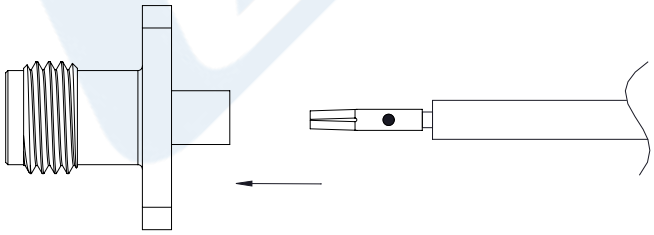

Click the following link (or enter part number in “SEARCH” on website) to obtain additional part information including price, inventory and certifications: SMA Female Connector Solder Attachment 4 Hole Flange Mount for RG405, RG405 Tinned, PE-SR405FL, PE-SR405AL, .340 inch Hole Spacing PE44998

Pasternack Enterprises, Inc. • P.O. Box 16759, Irvine, CA 92623
Phone: (866) 727-8376 or (949) 261-1920 • **Fax:** (949) 261-7451
Sales@Pasternack.com • Techsupport@Pasternack.com

© 2020 Pasternack Enterprises All Rights Reserved

SMA Female Connector Solder Attachment 4 Hole Flange Mount for RG405, RG405 Tinned, PE-SR405FL, PE-SR405AL, .340 inch Hole Spacing

RF Connectors
Technical Data Sheet

PE44998

SMA Female Connector Solder Attachment 4 Hole Flange Mount for RG405, RG405 Tinned, PE-SR405FL, PE-SR405AL, .340 inch Hole Spacing from Pasternack Enterprises has same day shipment for domestic and International orders. Our RF, microwave and millimeter wave products maintain a 99.4% availability and are part of the broadest selection in the industry.

Click the following link (or enter part number in “SEARCH” on website) to obtain additional part information including price, inventory and certifications: SMA Female Connector Solder Attachment 4 Hole Flange Mount for RG405, RG405 Tinned, PE-SR405FL, PE-SR405AL, .340 inch Hole Spacing PE44998

URL: https://www.pasternack.com/sma-female-standard-rg405-pe-sr405fl-pe-sr405al-connector-pe44998-p.aspx

The information contained in this document is accurate to the best of our knowledge and representative of the part described herein. It may be necessary to make modifications to the part and/or the documentation of the part, in order to implement improvements. Pasternack reserves the right to make such changes as required. Unless otherwise stated, all specifications are nominal. Pasternack does not make any representation or warranty regarding the suitability of the part described herein for any particular purpose, and Pasternack does not assume any liability arising out of the use of any part or documentation.

Pasternack Enterprises, Inc. • P.O. Box 16759, Irvine, CA 92623
Phone: (866) 727-8376 or (949) 261-1920 • **Fax:** (949) 261-7451
Sales@Pasternack.com • Techsupport@Pasternack.com

© 2020 Pasternack Enterprises All Rights Reserved

PE44998 CAD Drawing

SMA Female Connector Solder Attachment 4 Hole Flange Mount for RG405, RG405 Tinned, PE-SR405FL, PE-SR405AL, .340 inch Hole Spacing

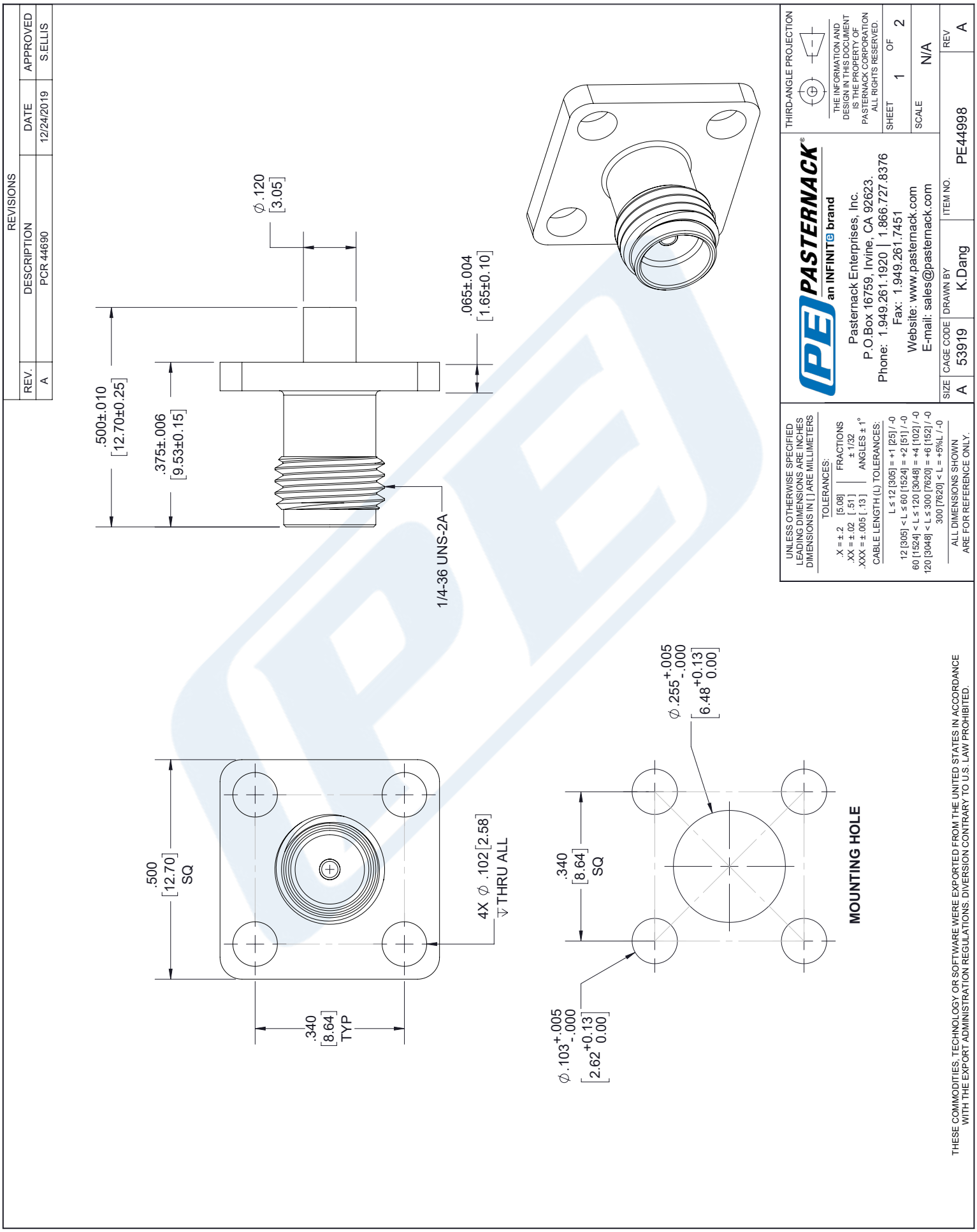

© 2020 Pasternack Enterprises All Rights Reserved

PASTERNACK
an INFINITE brand

SMA Female Connector Solder Attachment 4 Hole Flange Mount for RG405, RG405 Tinned, PE-SR405FL, PE-SR405AL, .340 inch Hole Spacing

RF Connectors
Technical Data Sheet

PE44998

Configuration

- SMA Female Connector
- 50 Ohms
- Straight Body Geometry
- Connector Interface Types: RG405, RG405 Tinned, PE-SR405FL, PE-SR405AL, PE-SR405FLJ, PE-SR405TN
- 4 Hole Flange

Features

- Max. Operating Frequency 18 GHz
- Good VSWR of 1.45:1
- Gold Plated Beryllium Copper Contact

Applications

- General Purpose Test
- Rack and Panel Mount Applications
- Custom Cable Assemblies

Description

Pasternack's PE44998 SMA female 4 hole flange mount connector with solder/solder attachment for RG405, RG405 Tinned, PE-SR405FL, PE-SR405AL, PE-SR405FLJ and PE-SR405TN is part of our full line of RF components available for same-day shipping. Our SMA female connector operates up to a maximum frequency of 18 GHz and offers good VSWR of 1.45:1. This SMA 4 hole flange connector allows designers to create external connections on their product enclosures, and can be used in a variety of other rack mount and panel mount applications.

Our SMA female 4 hole flange connector PE44998 datasheet specifications and drawing with dimensions are shown below in this PDF. Pasternack's broad catalog of RF, microwave and millimeter wave connectors allows designers to configure and customize their signal connections however they like. Whether the need is to provide an I/O for a board design, or simply create a custom cable assembly configuration, Pasternack has the right connector for the job. Pasternack can also expertly build your custom cable assemblies for you and ship same-day.

Electrical Specifications

Description	Minimum	Typical	Maximum	Units
Frequency Range	DC		18	GHz
VSWR			1.45:1	

Mechanical Specifications

Size	
Length	0.5 in [12.7 mm]
Width/Dia.	0.5 in [12.70 mm]
Height	0.5 in [12.7 mm]
Weight	0.007 lbs [3.18 g]

Click the following link (or enter part number in "SEARCH" on website) to obtain additional part information including price, inventory and certifications: SMA Female Connector Solder Attachment 4 Hole Flange Mount for RG405, RG405 Tinned, PE-SR405FL, PE-SR405AL, .340 inch Hole Spacing PE44998

Pasternack Enterprises, Inc. • P.O. Box 16759, Irvine, CA 92623
Phone: (866) 727-8376 or (949) 261-1920 • **Fax:** (949) 261-7451
Sales@Pasternack.com • Techsupport@Pasternack.com

© 2020 Pasternack Enterprises All Rights Reserved

SMA Female Connector Solder Attachment 4 Hole Flange Mount for RG405, RG405 Tinned, PE-SR405FL, PE-SR405AL, .340 inch Hole Spacing

Material Specifications

Description	Material	Plating
Contact	Beryllium Copper	Gold
Insulation	PTFE	
Body	Stainless Steel	Gold

Environmental Specifications

Compliance Certifications (see product page for current document)

Plotted and Other Data

Notes:

Click the following link (or enter part number in “SEARCH” on website) to obtain additional part information including price, inventory and certifications: SMA Female Connector Solder Attachment 4 Hole Flange Mount for RG405, RG405 Tinned, PE-SR405FL, PE-SR405AL, .340 inch Hole Spacing PE44998

Pasternack Enterprises, Inc. • P.O. Box 16759, Irvine, CA 92623
Phone: (866) 727-8376 or (949) 261-1920 • **Fax:** (949) 261-7451
Sales@Pasternack.com • Techsupport@Pasternack.com

© 2020 Pasternack Enterprises All Rights Reserved

SMA Female Connector Solder Attachment 4 Hole Flange Mount for RG405, RG405 Tinned, PE-SR405FL, PE-SR405AL, .340 inch Hole Spacing

Assembly Instruction

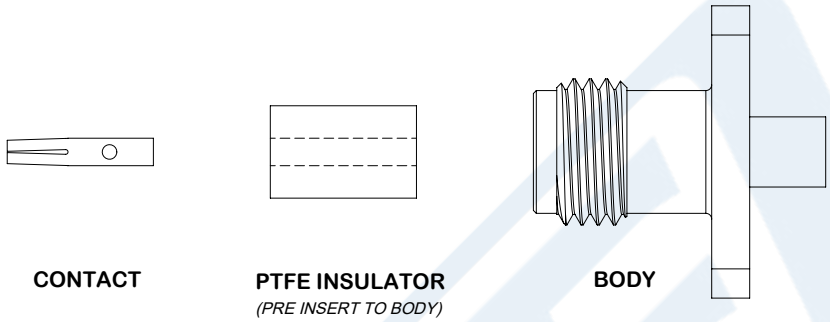

1. STRIP CABLE AS SHOWN. DO NOT NICK CENTER CONDUCTOR.

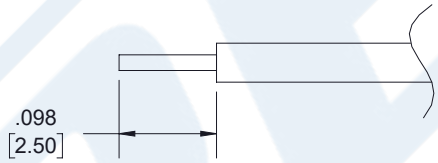

2. PLACE CONTACT OVER CENTER CONDUCTOR AS SHOWN. SOLDER CONTACT TO CENTER CONDUCTOR AS SHOWN.

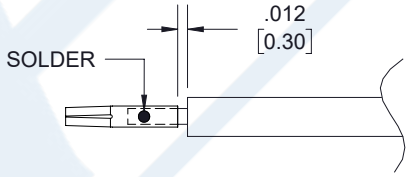

3. INSERT BODY INTO THE CONTACT UNTIL CONTACT SITS FLUSH TO THE DIELECTRIC. SOLDER BODY TO CABLE.

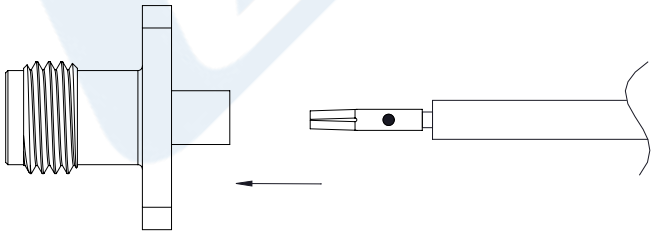

Click the following link (or enter part number in “SEARCH” on website) to obtain additional part information including price, inventory and certifications: SMA Female Connector Solder Attachment 4 Hole Flange Mount for RG405, RG405 Tinned, PE-SR405FL, PE-SR405AL, .340 inch Hole Spacing PE44998

Pasternack Enterprises, Inc. • P.O. Box 16759, Irvine, CA 92623
Phone: (866) 727-8376 or (949) 261-1920 • **Fax:** (949) 261-7451
Sales@Pasternack.com • Techsupport@Pasternack.com

© 2020 Pasternack Enterprises All Rights Reserved

SMA Female Connector Solder Attachment 4 Hole Flange Mount for RG405, RG405 Tinned, PE-SR405FL, PE-SR405AL, .340 inch Hole Spacing

RF Connectors
Technical Data Sheet

PE44998

SMA Female Connector Solder Attachment 4 Hole Flange Mount for RG405, RG405 Tinned, PE-SR405FL, PE-SR405AL, .340 inch Hole Spacing from Pasternack Enterprises has same day shipment for domestic and International orders. Our RF, microwave and millimeter wave products maintain a 99.4% availability and are part of the broadest selection in the industry.

Click the following link (or enter part number in “SEARCH” on website) to obtain additional part information including price, inventory and certifications: SMA Female Connector Solder Attachment 4 Hole Flange Mount for RG405, RG405 Tinned, PE-SR405FL, PE-SR405AL, .340 inch Hole Spacing PE44998

URL: https://www.pasternack.com/sma-female-standard-rg405-pe-sr405fl-pe-sr405al-connector-pe44998-p.aspx

The information contained in this document is accurate to the best of our knowledge and representative of the part described herein. It may be necessary to make modifications to the part and/or the documentation of the part, in order to implement improvements. Pasternack reserves the right to make such changes as required. Unless otherwise stated, all specifications are nominal. Pasternack does not make any representation or warranty regarding the suitability of the part described herein for any particular purpose, and Pasternack does not assume any liability arising out of the use of any part or documentation.

Pasternack Enterprises, Inc. • P.O. Box 16759, Irvine, CA 92623
Phone: (866) 727-8376 or (949) 261-1920 • **Fax:** (949) 261-7451
Sales@Pasternack.com • Techsupport@Pasternack.com

© 2020 Pasternack Enterprises All Rights Reserved

PE44998 CAD Drawing

SMA Female Connector Solder Attachment 4 Hole Flange Mount for RG405, RG405 Tinned, PE-SR405FL, PE-SR405AL, .340 inch Hole Spacing

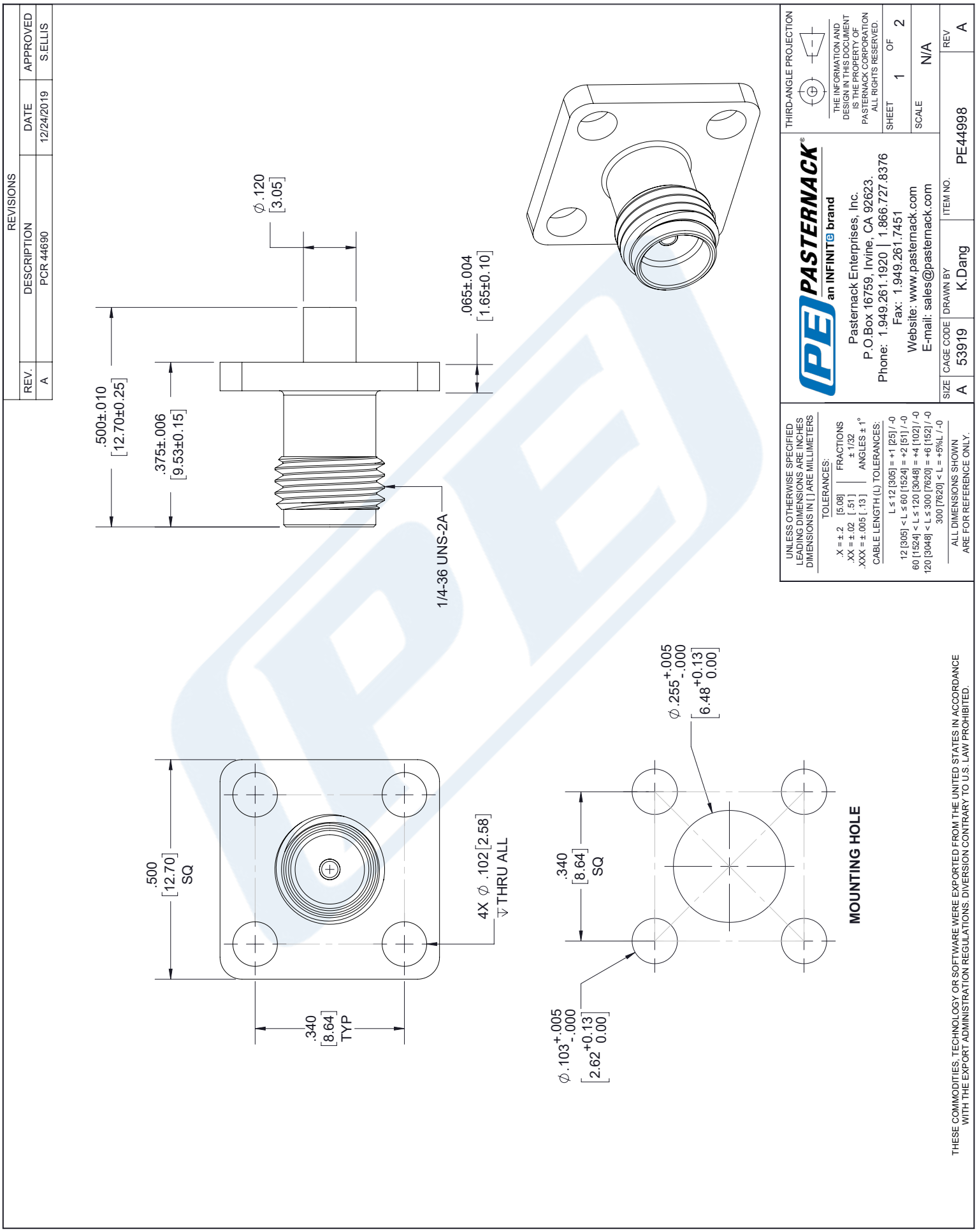

© 2020 Pasternack Enterprises All Rights Reserved

PASTERNACK®
THE ENGINEER'S RF SOURCE

Flexible PE-P086HF Coax Cable Double Shielded with Blue FEP Jacket

RF Cables Technical Data Sheet PE-P086HF

Configuration

- Flexible Cable
- 2 Shield(s)

Description

Pasternack's PE-P086HF is a flexible, high frequency coaxial cable that provides similar loss characteristics to semi-rigid cable and low VSWR of 1.3:1 maximum up to 40 GHz. The low loss coax cable features silver-plated conductors and dual shields to maintain a shielding effectiveness of 110 dB. The size of the conductors for this low VSWR coax was specifically chosen to allow termination with standard connectors designed for M17/133-RG405 and other M17/133 cables. The outer shield is coated with a tough, chemical and heat resistant jacket. This PE-P086HF flexible low loss coaxial cable is a great choice for short length, high frequency system hook-up or jumper cable applications. The Pasternack coax cable can also be used as a replacement option for bent semi-rigid cable assemblies when length and routing are considered.

Electrical Specifications

Description	Minimum	Typical	Maximum	Units
Frequency Range	DC		40	GHz
Impedance		50 ±2		Ohms
Velocity of Propagation		70		%
Nominal Capacitance		29.4 [96.46]		pF/ft [pF/m]

Click the following link (or enter part number in "SEARCH" on website) to obtain additional part information including price, inventory and certifications: Flexible PE-P086HF Coax Cable Double Shielded with Blue FEP Jacket PE-P086HF

Pasternack Enterprises, Inc. • P.O. Box 16759, Irvine, CA 92623
Phone: (866) 727-8376 or (949) 261-1920 • **Fax:** (949) 261-7451
Sales@Pasternack.com • Techsupport@Pasternack.com

© 2017 Pasternack Enterprises All Rights Reserved

Flexible PE-P086HF Coax Cable Double Shielded with Blue FEP Jacket

RF Cables Technical Data Sheet PE-P086HF

Performance by Frequency Band

Description	F1	F2	F3	F4	F5	Units
Frequency	0.4	1	2	2.4	3	GHz
Attenuation, Max	13.1	21.1	30.5	33.7	38	dB/100ft
	42.98	69.23	100.07	110.56	124.67	dB/100m
Attenuation, Typ	11.9	19.2	27.7	30.6	34.5	dB/100ft
	39.04	62.99	90.88	100.39	113.19	dB/100m

Description	F6	F7	F8	F9	F10	Units
Frequency	5	10	18	40		GHz
Attenuation, Max	50.3	74.3	104.6	170.3		dB/100ft
	165.03	243.77	343.18	558.73		dB/100m
Attenuation, Typ	45.7	67.5	95.1	154.8		dB/100ft
	149.93	221.46	312.01	507.87		dB/100m

Mechanical Specifications

Diameter	0.104 in [2.64 mm]
Weight	0.013 lbs/ft [0.02 Kg/m]
Min. Bend Radius (Installation)	0.52 in [13.21 mm]

Construction Specifications

Description	Material and Plating	Diameter
Inner Conductor	Copper Clad Steel, Silver, 1 Strands	0.02 in [0.51 mm]
Conductor Type	Solid	
Dielectric	PTFE	0.064 in [1.63 mm]
First Shield	Silver Plated Copper Tape	
Second Shield	Silver Plated Copper Braid	

Click the following link (or enter part number in "SEARCH" on website) to obtain additional part information including price, inventory and certifications: Flexible PE-P086HF Coax Cable Double Shielded with Blue FEP Jacket PE-P086HF

Pasternack Enterprises, Inc. • P.O. Box 16759, Irvine, CA 92623
Phone: (866) 727-8376 or (949) 261-1920 • **Fax:** (949) 261-7451
Sales@Pasternack.com • Techsupport@Pasternack.com

© 2017 Pasternack Enterprises All Rights Reserved

Flexible PE-P086HF Coax Cable Double Shielded with Blue FEP Jacket

Jacket	FEP, Blue	0.104 in [2.64 mm]

Environmental Specifications

Temperature

Operating Range	-55 to +200 deg C

Compliance Certifications (see product page for current document)

Plotted and Other Data

Notes:

Flexible PE-P086HF Coax Cable Double Shielded with Blue FEP Jacket from Pasternack Enterprises has same day shipment for domestic and International orders. Our RF, microwave and millimeter wave products maintain a 99.4% availability and are part of the broadest selection in the industry.

Click the following link (or enter part number in "SEARCH" on website) to obtain additional part information including price, inventory and certifications: Flexible PE-P086HF Coax Cable Double Shielded with Blue FEP Jacket PE-P086HF

URL: https://www.pasternack.com/50-ohm-flexible-invalid-alias-fep-jacket-silver-plated-copper-tape-over-silver-plated-copper-braid-outer-conductor-double-shielded-blue-pe-p086hf-p.aspx

The information contained in this document is accurate to the best of our knowledge and representative of the part described herein. It may be necessary to make modifications to the part and/or the documentation of the part, in order to implement improvements. Pasternack reserves the right to make such changes as required. Unless otherwise stated, all specifications are nominal. Pasternack does not make any representation or warranty regarding the suitability of the part described herein for any particular purpose, and Pasternack does not assume any liability arising out of the use of any part or documentation.

Pasternack Enterprises, Inc. • P.O. Box 16759, Irvine, CA 92623
Phone: (866) 727-8376 or (949) 261-1920 • **Fax:** (949) 261-7451
Sales@Pasternack.com • Techsupport@Pasternack.com

© 2017 Pasternack Enterprises All Rights Reserved

PE-P086HF CAD Drawing

Flexible PE-P086HF Coax Cable Double Shielded with Blue FEP Jacket

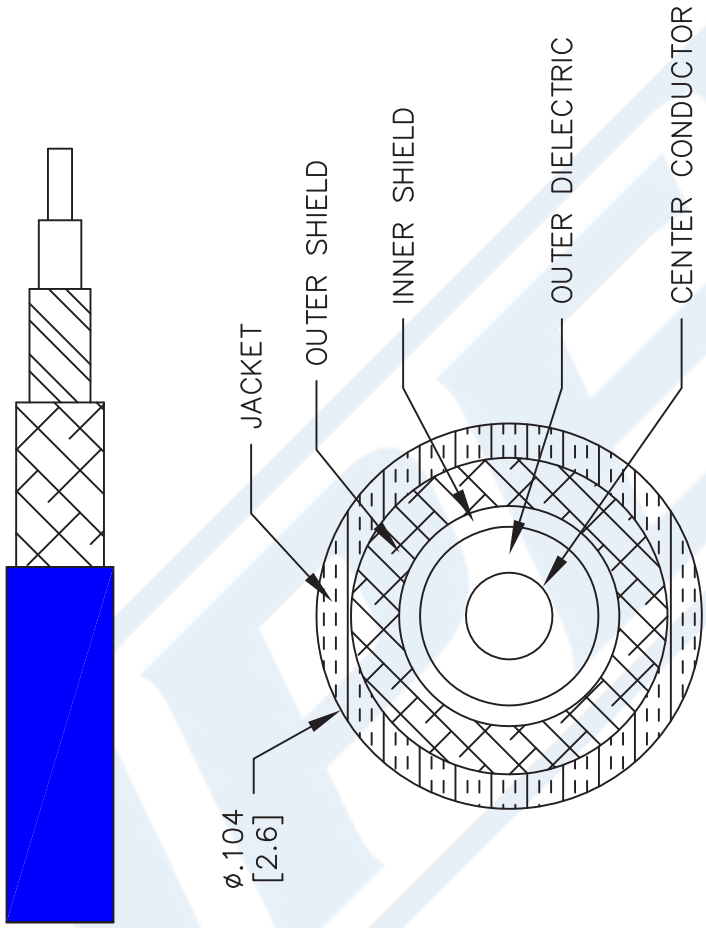

NOTES:
1. UNLESS OTHERWISE SPECIFIED ALL DIMENSIONS ARE NOMINAL.
2. ALL SPECIFICATIONS ARE SUBJECT TO CHANGE WITHOUT NOTICE AT ANY TIME.
3. DIMENSIONS ARE IN INCHES [mm].

DWG TITLE
PE-P086HF

CAD FILE 041317 | SCALE N/A | SIZE A | 2233

CAGE CODE 53919

PASTERNACK®
THE ENGINEER'S RF SOURCE
Pasternack Enterprises, Inc.
P.O. Box 16759 | Irvine | CA | 92623
Phone: (949) 261-1920 | **Fax:** (949) 261-7451
Website: www.pasternack.com | **E-Mail:** sales@pasternack.com

© 2017 Pasternack Enterprises All Rights Reserved