# 75 Ohm BNC Male Right Angle Connector Crimp/ Solder Attachment for RG59B/U, RG62, RG71



## PE4608

### Configuration

- BNC Male Connector
- 75 Ohms
- Right Angle Body Geometry
- Connector Interface Types: RG59B/U, RG62, RG71

### Features

- Max. Operating Frequency 500 MHz
- Good VSWR of 1.5:1
- Gold Plated Brass Contact
- 30 µin minimum contact plating

### Applications

- General Purpose Test
- Custom Cable Assemblies
- CATV

### Description

Pasternack's PE4608 Right Angle, BNC, Standard, Connector is part of our full line of RF components available for same-day shipping. Our BNC male connector operates up to a maximum frequency of 500 MHz and offers good VSWR of 1.5:1. Its right angle body geometry allows for easier connections in tight spaces.

Our 75 ohm BNC male right angle connector PE4608 datasheet specifications and drawing with dimensions are shown below in this PDF. Pasternack's broad catalog of RF, microwave and millimeter wave connectors allows designers to configure and customize their signal connections however they like. Whether the need is to provide an I/O for a board design, or simply create a custom cable assembly configuration, Pasternack has the right connector for the job. Pasternack can also expertly build your custom cable assemblies for you and ship same-day.

### Electrical Specifications

| Description | Minimum | Typical | Maximum | Units |
|---|---|---|---|---|
| Frequency Range | DC | | 500 | MHz |
| VSWR | | | 1.5:1 | |
| Operating Voltage (AC) | | | 500 | Vrms |
| Impedance | | 75 | | Ohms |

### Mechanical Specifications

| Size | |
|---|---|
| Length | 1.138 in [28.91 mm] |
| Width | 0.57 in [14.48 mm] |
| Height | 1.142 in [29.01 mm] |
| Weight | 0.054 lbs [24.49 g] |


© 2023 Infinite Electronics, Inc. Pasternack is a registered trademark of Infinite Electronics, Inc.
+1 (866) 558-2786 | sales@pasternack.com | pasternack.com

# 75 Ohm BNC Male Right Angle Connector Crimp/ Solder Attachment for RG59B/U, RG62, RG71



## PE4608

### Material Specifications

| Description | Material | Plating |
|---|---|---|
| Contact | Brass | Gold<br>30 µin minimum |
| Insulation | PTFE | |
| Body | Brass | Nickel<br>100 µin minimum |
| Coupling Nut | Brass | Nickel<br>100 µin minimum |

### Environmental Specifications

**Temperature**

| | |
|---|---|
| Operating Range | -65 to +165 deg C |

### Compliance Certifications (see product page for current document)

### Plotted and Other Data

Notes:


© 2023 Infinite Electronics, Inc. Pasternack is a registered trademark of Infinite Electronics, Inc.
+1 (866) 558-2786 | sales@pasternack.com | pasternack.com

# 75 Ohm BNC Male Right Angle Connector Crimp/ Solder Attachment for RG59B/U, RG62, RG71



## PE4608

### Assembly Instruction

*

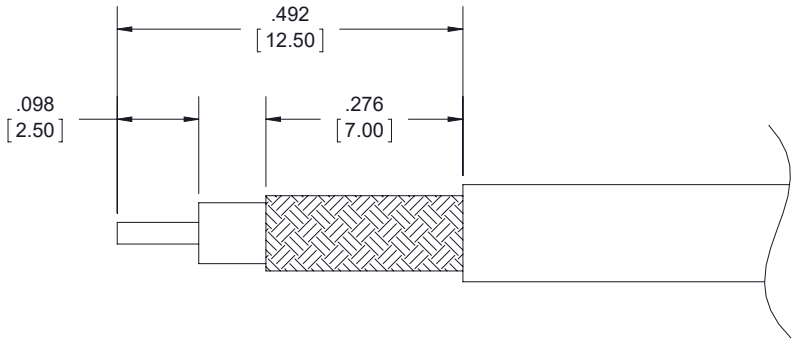


**ASSEMBLY PROCEDURES**

1. STRIP CABLE TO THE DIMENSIONS SHOWN, DO NOT NICK CENTER CONDUCTOR OR BRAID.
2. PUSH CENTER CONDUCTOR FULLY INTO CONTACT AND CRIMP WITH CRIMP TOOL.
3. FLARE BRAID AND INSERT THE BODY UNTIL IT SEATS.
4. SLIDE FERRULE OVER BRAID AND CRIMP WITH CRIMP TOOL.

**CRIMP SIZE REQUIRED**

- CONTACT: .068 [1.73] HEX CRIMP TOOL.
- FERRULE: .256 [6.50] HEX CRIMP TOOL.


© 2023 Infinite Electronics, Inc. Pasternack is a registered trademark of Infinite Electronics, Inc.

# 75 Ohm BNC Male Right Angle Connector Crimp/ Solder Attachment for RG59B/U, RG62, RG71



## PE4608

75 Ohm BNC Male Right Angle Connector Crimp/Solder Attachment for RG59B/U, RG62, RG71 from Pasternack Enterprises has same day shipment for domestic and International orders. Our RF, microwave and millimeter wave products maintain a 99.4% availability and are part of the broadest selection in the industry.

Click the following link (or enter part number in "SEARCH" on website) to obtain additional part information including price, inventory and certifications: 75 Ohm BNC Male Right Angle Connector Crimp/Solder Attachment for RG59B/U, RG62, RG71 PE4608

URL: https://www.pasternack.com/bnc-male-rg59b-u-rg62-rg71-connector-pe4608-p.aspx

The information contained within this document is accurate to the best of our knowledge and representative of the part described herein. It may be necessary to make modifications to the part and/or the documentation of the part in order to impliment improvements. Pasternack Enterprises reserves the right to make such changes as required. Unless otherwise stated, all specifications are nominal. Pasternack Enterprises does not make any representation or warranty regarding the suitability of the part described herein for any particular purpose, and Pasternack Enterprises does not assume liability arising out of the use of any part or document.


© 2023 Infinite Electronics, Inc. Pasternack is a registered trademark of Infinite Electronics, Inc.

# PE4608 CAD Drawing

75 Ohm BNC Male Right Angle Connector Crimp/Solder Attachment for RG59B/U, RG62, RG71

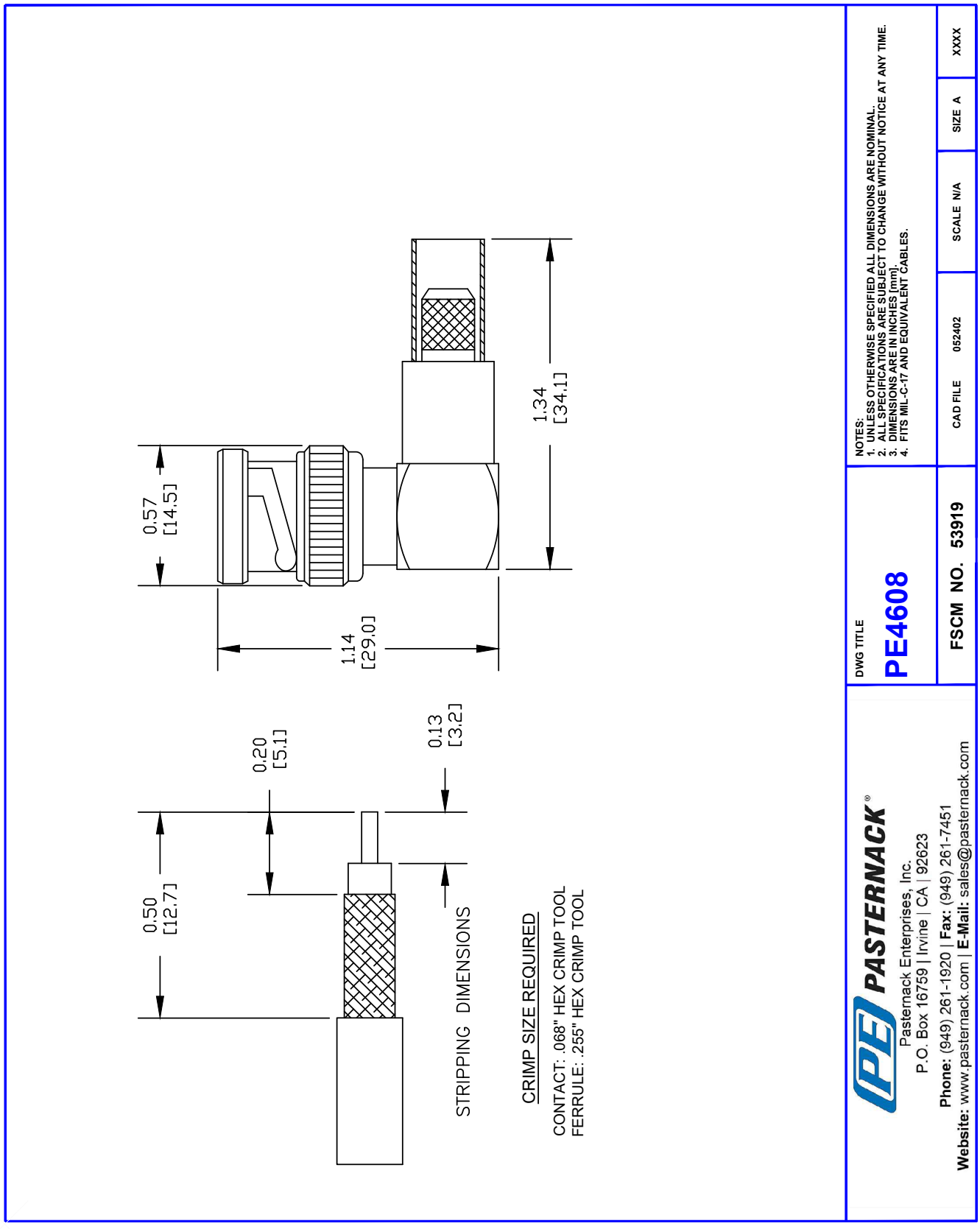




© 2023 Infinite Electronics, Inc. Pasternack is a registered trademark of Infinite Electronics, Inc.